Hindawi
Advances in Multimedia
Volume 2023, Article ID 9769324, 1 page
https://doi.org/10.1155/2023/9769324

Retraction

Retracted: Computer Course Design Plan for Film and Television Media Major

Advances in Multimedia

Received 12 December 2023; Accepted 12 December 2023; Published 13 December 2023

This article has been retracted by Hindawi, as publisher, following an investigation undertaken by the publisher [1]. This investigation has uncovered evidence of systematic manipulation of the publication and peer-review process. We cannot, therefore, vouch for the reliability or integrity of this article.

Please note that this notice is intended solely to alert readers that the peer-review process of this article has been compromised.

Wiley and Hindawi regret that the usual quality checks did not identify these issues before publication and have since put additional measures in place to safeguard research integrity.

We wish to credit our Research Integrity and Research Publishing teams and anonymous and named external researchers and research integrity experts for contributing to this investigation.

The corresponding author, as the representative of all authors, has been given the opportunity to register their agreement or disagreement to this retraction. We have kept a record of any response received.

References

[1] S. Hui, X. Zhang, and T. Yang, "Computer Course Design Plan for Film and Television Media Major," *Advances in Multimedia*, vol. 2023, Article ID 5769956, 10 pages, 2023.

Hindawi
Advances in Multimedia
Volume 2023, Article ID 5769956, 10 pages
https://doi.org/10.1155/2023/5769956

Research Article

Computer Course Design Plan for Film and Television Media Major

Shan Hui,[1] Xiao Zhang,[1] and Tian Yang[2]

[1]*Institute of Art & Design, Shaanxi Fashion Engineering University, Xi'an 712046, China*
[2]*Party and Government Office, China University of Mining & Technology (Beijing), Beijing 100083, China*

Correspondence should be addressed to Tian Yang; yangtian@cumtb.edu.cn

Received 30 July 2022; Revised 13 September 2022; Accepted 23 September 2022; Published 21 March 2023

Academic Editor: Tao Zhou

Although the film and television media sector is seeing significant growth, there is still a lag in film and television media majors at colleges and institutions. As a result, the colleges must keep pace with the current development trend. In order to better prepare students for the film and television industry, film and television media majors must rethink their teaching methods and promote students' artistic ideas and professional skills. In the context of surging numbers of students and limited teaching resources, traditional teaching has highlighted many problems. Some film and television media majors have set up corresponding computer courses to make up for the deficiencies of traditional teaching through computer multimedia technology and network technology. This work is oriented to the design of computer courses for film and television media majors. First, this work aims at the current situation of computer courses in film and television media majors, analyzes the existing problems and causes, and explores ways to solve them. Second, this work proposes the IGA-BP model based on neural network to evaluate the teaching quality of computer courses for film and television media majors. In view of the excellent global optimization ability of GA and the defects of the BP algorithm itself, this work adopts the improved GA algorithm to optimize the BP network, and establishes an IGA-BP network combination model with higher prediction accuracy. Third, this work has carried out sufficient experiments, and the experimental results have verified that the IGA-BP network can effectively evaluate the teaching quality of computer courses in film and television media majors. In addition, the comparative experiment also verifies that the computer course design scheme proposed in this work can effectively improve the teaching quality.

1. Introduction

Nowadays, there is a shortage of innovative talents in the film and television media industry. Although major colleges and universities send a large number of film and television media graduates to the society every year. However, their overall quality is low and cannot meet the society's demand for innovative and applied talents. Most of the film and television media colleges carry out teaching in accordance with the traditional teaching mode, and it is difficult to carry out teaching in accordance with aptitude in this mode. Students cannot get integrated training and guidance both in and out of class, and it is difficult to apply the theory taught in class to actual creation. This results in a lack of interest in theoretical learning and a lack of practical experience for students. To better improve this situation, it is significant for film and television media majors in colleges to reform the existing teaching mode and pay attention to the dual importance of theory and practice [1–4].

Under the current social background, the demand for applied and innovative talents is gradually increasing. The competitive pressure of general talents in the market is increasing. This reflects the important position of practice in the teaching process, and the practice teaching in the film and television media industry can better highlight the advantages of its own talent training. Practical teaching can not only activate the classroom atmosphere, mobilize students' interest in learning but also better cultivate high-quality talents for film and television media majors. Only by establishing a creative platform for practical teaching, the school will be more reasonable in the arrangement of theoretical and practical courses, and the teaching content

will be closer to the needs of society. Through the learning of this platform, students can better improve their own quality and ability, and then become innovative talents with stronger market competitiveness. As the cradle of cultivating film and television talents, these majors in colleges and universities have systematically organized teachers, instruments, and equipment required for teaching in the process of carrying out practical teaching. With the continuous advancement of digital technology, the practical teaching system is also constantly developing. However, the practical teaching of film and television media major inevitably faces the dilemma of late start and slow development. The methods and methods for professional personnel training are also still in the exploratory stage. Therefore, there will be a high-standard demand for innovative film and television media talents in the industry, but the talents cultivated by colleges and universities have been unable to meet the needs of society. On this basis, there are still many problems for teaching of the film and television media industry in Chinese colleges and universities [5–8].

First of all, the school lacks the guidance of students' creation. At present, teachers of film and television media majors in colleges mainly focus on guiding students on the problems existing in equipment operation, and pay more attention to teaching students related professional skills. However, when students create works independently, they often have no idea where to start. This resulted in a complete mismatch between the quality of his work and the techniques he learned. Second, the teaching equipment is outdated and backward. Most of the equipment for practical teaching of media majors in colleges and universities has been used for many years. However, the new advanced equipment has not been fully implemented and applied to teaching. In this way, the equipment and usage methods mastered by students in school do not match what they are exposed to after work, and they will gradually become out of touch with the society and lose their ability to compete in the market. Finally, there are deficiencies in school teaching methods. Judging from the current situation, most colleges and universities have the phenomenon of attaching importance to theoretical teaching and despising practical teaching. This makes it impossible for students to receive a comprehensive high-quality education in the learning process and to become innovative film and television talents. Students also despise hands-on learning because of the school's pedagogical attitudes [9–12].

At present, the practical teaching of film and television media majors in colleges and universities mainly tends to teach students to master the operation skills of film and television equipment. However, there is still a lack of effective guidance for students on how to use technical equipment to create high-quality film and television works. In process for practical teaching, use of digital video equipment and instruments is indispensable. However, the existing equipment in colleges and universities is far from meeting the teaching needs of film and television media majors. And these devices are often technologically behind the industry as a whole. As a result, students cannot use the most advanced equipment to master professional skills, and their competitiveness after entering the society will be greatly reduced. Finally, pay attention to the teaching method that ignores practice and theory. This makes the talents trained by the film and television media majors in colleges completely unable to meet the needs of the society for high-quality and innovative talents. Whether it is the further development of film and television media majors, quality of industry talents, or even the development prospects of film and television media majors, they will all be affected by the amount of practical teaching in colleges and universities [13–15].

This work investigates the design of computer courses for film and television media majors. First, this work aims at the current situation of computer courses in film and television media majors, analyzes the existing problems and causes, and explores ways to solve them. Second, this work proposes the IGA-BP model based on neural network to evaluate the teaching quality of computer courses for film and television media majors. In view of the excellent global optimization ability of GA and the defects of the BP algorithm itself, this work adopts the improved GA algorithm to optimize the BP network, and establishes an IGA-BP network combination model with higher prediction accuracy. Third, this work has carried out sufficient experiments, and the experimental results have verified that the IGA-BP network can effectively evaluate the teaching quality of computer courses in film and television media majors. In addition, the comparative experiment also verifies that the computer course design scheme proposed in this work can effectively improve the teaching quality.

2. Related Work

Literature [16] pointed out that film and television media has a perfect expression form and the nature of rapid and widespread dissemination. It occupies an irreplaceable important position in various art forms in today's society, and its influence on people, especially young people, is increasing day by day. The role of this education in school education is getting more and more attention. Literature [17] pointed out that there are two problems in the film and television media courses offered by colleges. First, the course content is vague, and second, it focuses on pure film and television art appreciation. Literature [10] believes that with the rapid development of network media, most of the film and television works that students want to watch today can be easily seen on the network. It is for this reason that the film and television appreciation course, as the most important course setting of the film and television communication course, has been unable to achieve its proper teaching purpose. Literature [18] pointed out that insufficient attention by schools and insufficient understandings of students are the two major problems restricting the development of film and television media education. Literature [19] pointed out that the commercial nature of film and television works cannot be ignored in the process of classroom teaching in film and television media education. On the other hand, watching film and television works cannot be regarded as the only means of attracting students. Instead, we should change the educational concept and enrich the

teaching content. Literature [20] pointed out that the following aspects should be taken as the focus to promote the curriculum construction of film and television media education. The first is to see the situation clearly, change the concept, and strengthen construction of courses. The second is to clarify ideas, reach a consensus, and form a unified concept of education and training. The third is to constantly innovate, seek breakthroughs, and improve the teaching methods of film and television media. Literature [21] believes that there are two key points in construction for film and television media education curriculum. The first is to offer more diversified courses to enrich students' choices and broaden the breadth of students' art knowledge. The second is to pay attention to the course gradient when setting up film and television media art courses, and increase the depth of students' art knowledge with the increase of grades. Literature [22] proposed that the reform of this education should be carried out from the following three aspects. The first is the reform and adjustment of the content design of the film and television appreciation course. The second is the reform and innovation of teaching methods of film and television appreciation. The third is to update and improve the teaching concept of film and television appreciation course.

Literature [23] analyzed the basic principles and evaluation system of this education curriculum reform. It believes that the reform of the education curriculum system in colleges should pay attention to the construction of curriculum evaluation objectives and evaluation standards, and set specific evaluation indicators. Literature [24] believes that the curriculum setting of film and television media education should be reformed and improved from four aspects, so as to better play the function of film and television media education. Literature [25] analyzed many problems faced by the curriculum setting of film and television media education. From the aspects of course content and course structure, it puts forward suggestions for constructing the curriculum system of film and television media education. Literature [26] believes that the professional curriculum of film and television media is influenced by concept for general education. It should strengthen construction of curriculum from the perspective of general education concept. Literature [27] starts with the education mode of film and television media; it believes that art forms and artistic means should be comprehensively used to integrate the educational resources of the whole school. Literature [28] believes that the construction of computer courses is directly related to the development of school professional disciplines. The key factors of curriculum construction are teaching content, teaching methods, teaching staff, and curriculum characteristics. Literature [29] took the construction of the film and television media curriculum system as an example to conduct a comprehensive evaluation. It analyzes the problems existing in the curriculum construction based on the index system. And put forward improvement measures in the aspects of film and television media course construction, teaching reform, practical teaching, teaching material construction, and so on. Literature [30] conducts a practical survey of students, teachers, and related industries of film and television media majors. It analyzes in detail the current situation of the professional curriculum construction of film and television media. It pointed out that based on cultural courses, professional courses as the theme, to carry out school-enterprise cooperation, the combination of theory and practice course construction ideas. Literature [31] pointed out that there are problems such as lack of overall planning of curriculum, outdated curriculum content, and weak teaching practice links in the current curriculum of film and television media majors. In view of these problems, it is necessary to optimize the design of the film and television media professional curriculum system.

3. Method

First, this work aims at the current situation of computer courses in film and television media majors, analyzes the existing problems and causes, and explores ways to solve them. Second, this work proposes the IGA-BP model based on neural network to evaluate the teaching quality of computer courses for film and television media majors. In view of the excellent global optimization ability of GA and the defects of the BP algorithm itself, this work adopts the improved GA algorithm to optimize the BP network, and establishes an IGA-BP network combination model with higher prediction accuracy.

3.1. Current Situation and Design of Computer Course. The existing computer courses for film and television media majors mainly have the following problems. First, pay attention to the presentation of teaching content and despise personalized services. A complete computer course is not only composed of teaching content, but more importantly, it has a learning evaluation system, a learning support system, a learning file system, and other personalized service systems. However, most of the courses only focus on the construction of teaching content system, and rarely touch on other aspects. Second, the presentation form of teaching content is single and backward. The biggest feature of the teaching content of film and television media majors that is different from other majors is that the teaching content contains a large number of video materials. However, the presentation of teaching content in many computer courses simply imitates other disciplines. Such as texts, PPTs, and teaching videos of teachers, the organization of such teaching content is single and backward. Third, insufficient learning resources and improper coding methods. Students majoring in film and television media need to watch a large number of film and television works in their spare time. However, the resource library of the existing course website is very scarce, which is far from meeting the needs of students' learning. Some online courses use inappropriate online video coding methods, which make students unable to watch smoothly in the online environment and affect their interest in learning. Fourth, the lack of experimental operation links. Experimental operation is an essential part of the study of film and television media majors. However, there is no function for virtual experiment operation in the existing courses. If you can combine the experimental requirements, experimental material library, virtual experimental

things, etc., this will help to improve students' enthusiasm for learning and hands-on ability.

According to current situation, this paper proposes a series of solutions for the shortcomings of the current computer courses. And integrate the advantages of existing network courses and network teaching platforms to design computer courses suitable for students majoring in film and television media. This provides a model for practical application research of computer course education, and has certain practical significance for changing the current situation of computer courses in film and television media majors. First, provide students with personalized learning services through computer courses, reflecting the student-oriented teaching principle. Students are the cognitive subject of learning, and the learning process is the process of students actively exploring, discovering problems, and constructing meaning. In computer courses, individualized learning services can be provided to students by enhancing the functions of the learning support system. Second, strengthen the interaction and feedback between students and teachers, students and students, and students and learning materials through the computer-based online course platform. Through the use of functional modules such as emails, teacher-student exchange forums, and student works exchange comments in computer courses, the interaction and feedback among students, teachers, and learning materials can be improved. Third, share course resources and improve resource utilization. Compared with other majors, the biggest feature of the film and television media major is that teaching involves a lot of resources. The biggest advantage of computers is the sharing of resources, and a learning resource library can be built through this advantage of computer courses. All kinds of video teaching materials, experimental materials, and other learning resources involved in the course are dynamically introduced in various ways for learners to use. Fourth, simulate real operations to enhance the operability and situational nature of experimental learning. With the development of flash and other technologies, it has become a reality to simulate experimental operation with software. And it has the characteristics of networking, low cost, and wide users. Therefore, this form can be appropriately selected in computer courses to provide learners with a place to simulate actual operations. This allows learners to quickly enter knowledge learning through perceptual knowledge and acquire corresponding professional skills.

3.2. BP Algorithm. Nonlinear transformation neurons make up a significant portion of the BP network. It is a feedforward neural network with multiple layers, and it serves as the brain of the system. Hidden layers are used in feedforward neural networks. A three-layer BP neural network can be used to map the nonlinear input-output relationship arbitrarily precisely. As a result, for most practical purposes, a BP network model can be constructed using only a single hidden layer. For the hidden layer, neurons tend to adopt the sigmoid activation function; for the output layer, neurons choose the linear transfer function. BP's neural network model resembles the general neuron model. The structure of a typical three-layer BP network is demonstrated in Figure 1.

The forward propagation of the signal and the reverse propagation of the error are the two main components of the BP algorithm. It follows that after determining the data's input mode, the signal is first transferred one-by-one to the hidden layer units for calculation, and then sent to the output layer for further processing. In this process, the state of the entire system is continuously updated iteratively. If the output result and the expected output do not meet the error requirements set by the network, the BP network model transfers to the back-propagation process of the error. During this process, the error value is back-propagated layer by layer to the input layer along the original propagation path. These two processes go back and forth. When the output result meets the set error requirement, the BP network model has been trained. The two processes of the BP network can be summarized as follows:

$$\begin{aligned} \hat{y}_i &= f\left(\sum_{ij} w_{ij}x_{ij} + b_{ij}\right), \\ Loss &= \sum_i (\hat{y}_i - y_i)^2, \\ w' &= w - \Delta w, \\ b' &= b - \Delta b, \end{aligned} \tag{1}$$

where w is weight, b is bias, y is true label.

Although BP network and its variants are widely used, there are still many limitations in BP network. First, there is a contradiction between neural network model stability and learning rate. In the standard BP network, a certain learning rate is required to be given in advance. However, there is still a lack of an effective method to select the learning rate. To keep the network error as small as possible, the learning rate should also be as small as possible. However, this will make the overall learning process of the network very long, resulting in slow model convergence. Using a larger learning rate can speed up the learning and training process of the network, but the network stability may be insufficient due to convergence oscillation. Second, the network may get stuck in local minima. The standard BP network uses the gradient descent method, but the direction of the steepest descent of this method is only relative to the local part of the network. Therefore, the error performance function of the network may get stuck in a local minimum. When this problem is encountered, it is generally solved by a combination of training the network multiple times and changing the initial parameters of the network, so as to obtain the global minimum point of the network. Finally, it is difficult to quickly and efficiently determine the appropriate number of hidden layer nodes. In general, too few neurons in the hidden layer may lead to insufficient ability of the network to identify samples. Therefore, the fault tolerance of the network as a whole will be relatively poor. When the training accuracy needs to be effectively improved, the number of hidden layer neurons can be increased. However, if there are too many neurons in the hidden layer, the network as a whole will become more

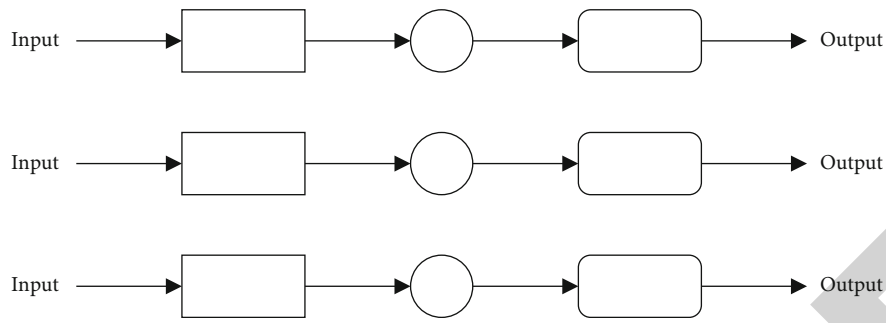

Figure 1: BP structure.

complicated, resulting in a decrease in the convergence speed. Therefore, when modeling a neural network, a more troublesome problem is to determine and select the appropriate number of neurons in the hidden layer.

3.3. GA Algorithm. Genetic algorithm simulates the survival of the fittest in the process of genetic evolution. It can perform a more efficient heuristic search in the solution space according to the constructed fitness function, and then find the region where the optimal solution of the problem is located. Therefore, this work uses GA to optimize the BP network. Genetic algorithm is mainly composed of chromosome coding, initial population setting, fitness function design, genetic operation, control parameter determination, and other parts.

When a genetic algorithm is running, it cannot directly deal with the actual variables of the problem it solves, only those individuals that are encoded. Therefore, coding is one of the first problems to be solved in genetic algorithm. Encoding is the process of transforming the phenotype in the solution space into the encoding space, making it a genotype that the algorithm can operate on. In addition to completing the transformation of the decision vector of the problem from the solution space to the encoding space, the encoding also determines the decoding method from the encoding space to the solution space. Whether the coding method is appropriate or not also has a direct impact on the quality of the answer to the problem to be solved and the efficiency of the genetic evolution operation. The genetic code should generally meet the three requirements of completeness, soundness, and nonredundancy.

In the genetic algorithm, the only deterministic indicator of whether each individual in the population can continue to survive is the fitness value. The basis for genetic manipulation is the fitness function, which is a function used to measure the fitness of an individual. Therefore, it determines the evolution operation of the genetic algorithm, which directly affects the operating efficiency of the algorithm and the pros and cons of the solution. Therefore, it is very important to determine an appropriate fitness function.

Genetic algorithms have three basic operations: selection, crossover, and mutation. In order to select individuals with a large fitness value in the population, it is necessary to select according to a specific method on the basis of evaluating the individual fitness, so that these selected individuals can have the opportunity to contribute to offspring as parents. The selection operator of the genetic algorithm simulates the survival of the fittest in nature, so that the parents of the offspring have a high probability or most of the individuals with larger fitness values. This will try to ensure that useful genetic information continues between the parent and the offspring. This allows individuals to continuously approach the optimal solution, thereby improving the global convergence of the genetic algorithm. The genetic algorithm imitates this process to design a crossover operator, which mainly includes two aspects: determining the position of the crossover point and which part of the gene to exchange. The crossover operation can generate new individuals with the properties of the parent. The genetic algorithm to generate new individuals mainly relies on the crossover operation. There is a step that cannot be omitted before the crossover operation, which is called pairing. Generally, a random pairing strategy is used to pair the individuals in the population, and then the crossover operation is performed after pairing. Variation refers to the replacement of part of a gene in one individual with an allele from another individual. But it is different from the crossover operator, although mutation can also generate some new individuals. But it is just a supplementary method, an auxiliary method. Although it only plays a supplementary and auxiliary role in generating new individuals, it does not mean that this step is not necessary. The mutation operator can keep the overall diversity of the population. As an auxiliary operator, this step is essential. It can improve the local search ability of the algorithm to a certain extent. The cooperation and competition between the crossover operator and the mutation operator make the search of the algorithm take into account both the global and the local.

3.4. IGA-BP Algorithm. Due to its own reasons, the BP algorithm has the defects that it is easy to fall into the local extreme point and the network convergence speed is slow. Therefore, in order to establish a higher-precision model based on the BP network, it is necessary to adopt a certain method to optimize it. Genetic algorithm is a method of simulating the biological self-evolution process to find the optimal solution. Genetic algorithm search is not limited to just one point. In addition, the probability law is used for efficient heuristic search in the solution space, so it has excellent global optimization ability. So use its ability to obtain initial weights and thresholds. And substitute it into the BP network to replace its randomly selected weights and

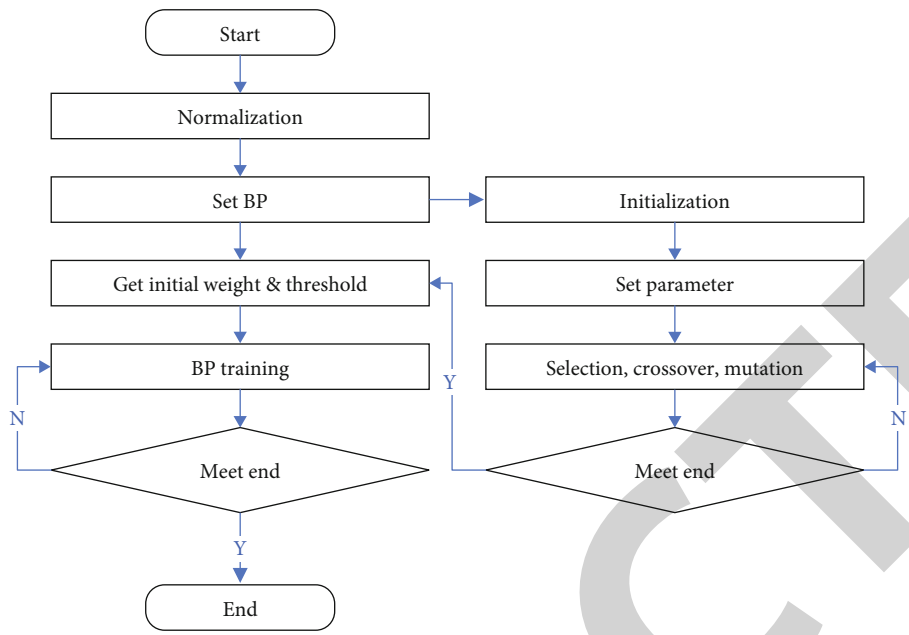

Figure 2: IGA-BP pipeline.

thresholds. Then fine-tune by training the BP network to prevent it from falling into a local minimum. The genetic algorithm can theoretically improve the convergence speed of the BP network model. This allows the network to get the prediction results faster, making the prediction results closer to the actual measured value.

In this paper, we will further optimize the GA-BP model to construct IGA-BP by optimizing the real number encoding method, adjusting the normalization interval of the training samples, and limiting the initial random selection range of the model.

The binary coding method is most commonly used in genetic algorithms. This method can handle the most patterns with the same population size. However, the use of binary encoding may result in a long encoding length, and the encoding and decoding processes are cumbersome, increasing the network convergence time and reducing the prediction accuracy. Therefore, the prediction models established in this paper using the genetic algorithm all use the real number coding (RNC) method. After the model is encoded by real numbers, the chromosomes in the genetic algorithm population contain 4 genes. After encoding using the real number encoding method, these connection weights and thresholds are represented by real numbers, and will not be decoded and encoded repeatedly. The chromosome length is

$$R = nm + ml + m + l, \tag{2}$$

where n represents input layer neuron, l represents output layer neuron, and m represents hidden layer neuron.

The BP network model will use the logsig function as the activation function between the input layer and the hidden layer, and the value range of this function is [0,1]. In order to prevent large numerical information from drowning out smaller numerical information, the data is normalized before training. However, the sample set obtained after this processing has at least one value of 0 and at least one value of 1. These two values just correspond to the extreme values of the logsig function. For the output of the network model to match these two extremes, its connection weights must be large enough. In this way, the number of times to correct the weights may become too many, thereby slowing down the overall network speed. This work uses an improved normalization interval (INI). When normalizing, the original data is normalized to [0,1] instead of normalized to the interval [0.05,0.95]. In this way, the output of the model can have enough room for growth, so that the predicted value of the model is closer to the measured value.

Table 1: Teaching quality evaluation indicators.

Code	Indicator
c_1	Teaching objective
c_2	Teaching preparation
c_3	Teaching process
c_4	Teaching content
c_5	Learning guide
c_6	Contact reality
c_7	Thinking training
c_8	Teaching effectiveness

In the optimization model, this work adopts a restricted parameter strategy (RP). It limits the range of connection weights and thresholds initially randomly selected by the model; that is, limits the value range of individual genes in the primary population. In this way, the genetic algorithm can quickly search for the interval where the optimal

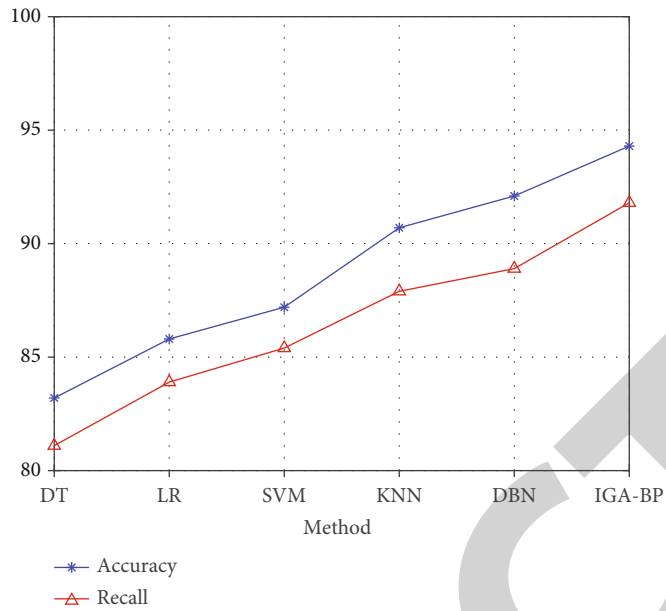

Figure 3: Performance of different method.

solution is located, reduce iterations of the genetic algorithm, and improve the operation efficiency of the combined model. In this work, the parameter selection range is limited between [-5, 5]. The pipeline of IGA-BP is demonstrated in Figure 2.

The first step is to import the sample set and normalize it according to the set method. The second step is to comprehensively determine the neural network topology. The third step is encoding and population initialization. The initial randomly selected weights and thresholds are extracted from the BP network and encoded to form the chromosomes in the genetic algorithm. The fourth step is to set relevant parameters. The fifth step is to carry out the genetic evolution operation. The sixth step is to judge whether the population satisfies the set parameters after the genetic evolution operation. If the set parameters are met, the genetic algorithm stops running, and then the last generation population is obtained. The seventh step is to fine-tune the BP network. The optimal connection weights and thresholds obtained by the genetic algorithm are used to replace the corresponding values randomly selected by the BP network model. Start the training of the BP network. When the set accuracy or the maximum number of iterations is reached, the training of the BP network is completed.

4. Experiment

4.1. Evaluation on IGA-BP. This work conducts relevant experiments on IGA-BP for teaching quality evaluation of computer courses for film and television media majors. First, the corresponding data sets need to be collected. The sample data used in this work contains 8 teaching quality evaluation indicators, as demonstrated in Table 1. The network evaluation indicators used in this work are the precision rate and the recall rate, and the calculation method is as follows:

$$\mathrm{ACC} = \frac{\mathrm{TP} + \mathrm{TN}}{\mathrm{Total}}, \qquad \mathrm{REC} = \frac{\mathrm{TP}}{\mathrm{TP} + \mathrm{FN}}. \tag{3}$$

This work compares IGA-BP with other methods. The methods compared include decision trees, logistic regression, SVM, KNN, and DBN. The result is demonstrated in Figure 3.

Compared with other machine learning methods, the IGA-BP network proposed in this work can achieve the highest accuracy and recall rates. This confirms the superiority of this method.

IGA-BP uses the RNC strategy. In order to verify the feasibility of this measure, this work compares the accuracy and recall rate without RNC and when RNC is used, as illustrated in Figure 4.

Compared with not using RNC, after using the RNC strategy, IGA-BP can achieve 2.1% and 1.9% performance improvements in both accuracy and recall. This corroborates the correctness of the RNC strategy.

IGA-BP uses the INI strategy. In order to verify the feasibility of this measure, this work compares the accuracy and recall rate without INI and when INI is used, as illustrated in Figure 5.

Compared with not using INI, after using the INI strategy, IGA-BP can achieve 1.6% and 1.5% performance improvements in both accuracy and recall. This corroborates the correctness of the INI strategy.

IGA-BP uses the RP strategy. In order to verify the feasibility of this measure, this work compares the accuracy and

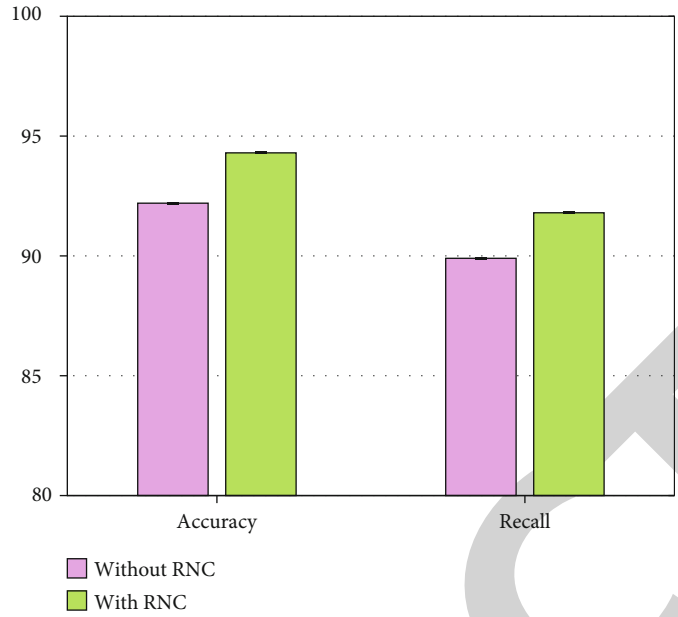

Figure 4: Evaluation on RNC strategy.

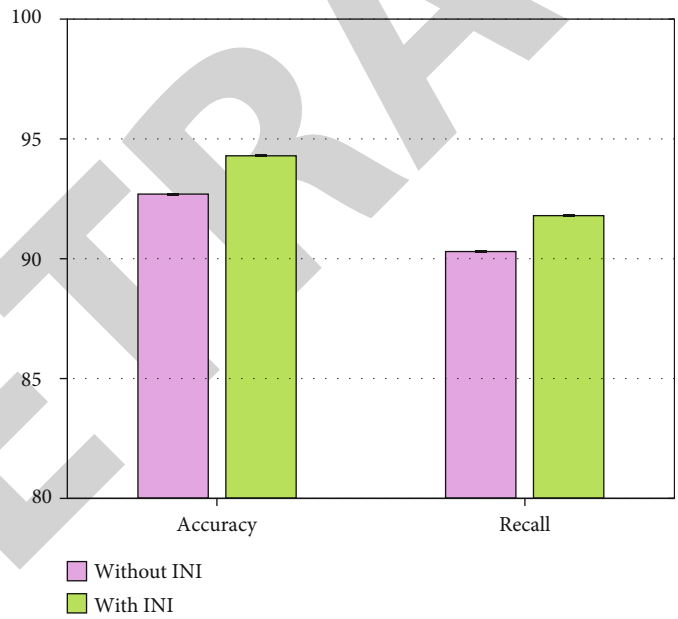

Figure 5: Evaluation on INI strategy.

recall rate without RP and when RP is used, as illustrated in Figure 6.

Compared with not using RP, after using the RP strategy, IGA-BP can achieve 1.4% and 1.1% performance improvements in both accuracy and recall. This corroborates the correctness of the RP strategy.

4.2. Evaluation on Computer Course Design. This work analyzes the current situation of computer courses for film and television media majors, and proposes some curriculum design plans. In order to verify the feasibility of these schemes, this work compares the teaching quality before and after using these schemes. The indicators compared are consistent with the indicators in the first table, and the comparison is scored using a percentage system. The results are demonstrated in Table 2.

After using these strategies, each course quality indicator score was significantly improved compared to before the proposed computer-based course design scheme. This proves the rationality and superiority of the computer course design scheme for film and television media majors proposed in this work.

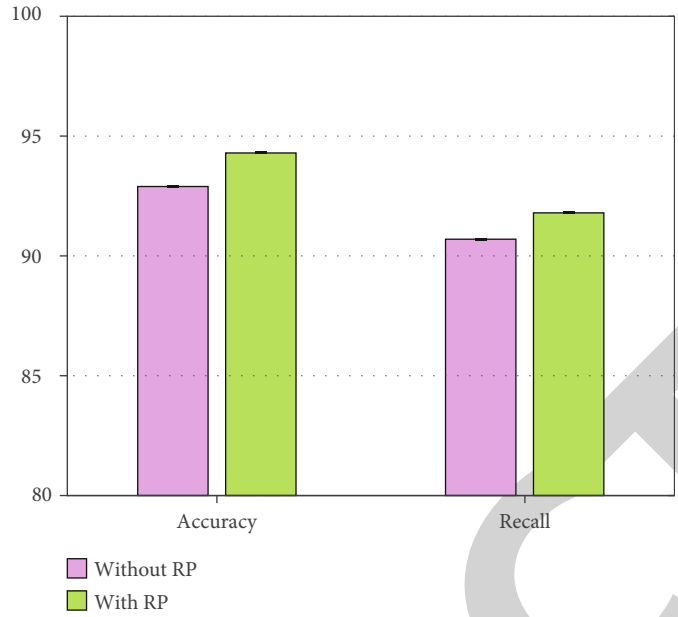

Figure 6: Evaluation on RP strategy.

Table 2: Evaluation on computer course design.

Indicator	Before using design	After using design
c_1	86.3	90.5
c_2	85.1	87.7
c_3	78.4	82.1
c_4	69.2	78.4
c_5	90.3	93.5
c_6	91.8	93.8
c_7	85.2	87.3
c_8	88.6	90.7

5. Conclusion

Film and television media majors include TV editing, film and television directing, radio and television director, and other majors. It mainly trains professionals for various film and television media units such as TV stations and radio stations. At present, traditional teaching highlights many problems. First, classroom time is limited and cannot meet needs. Secondly, classroom teaching is dominated by teachers, and students lack the initiative. Finally, the experimental resources are insufficient, and the students' hands-on ability declines. The major of film and television media has set up corresponding computer courses to make up for the deficiencies of traditional teaching through computer multimedia technology and network technology. This work investigates the design of computer courses for film and television media majors. First, this work aims at the current situation of computer courses in film and television media majors, analyzes the existing problems and causes, and explores ways to solve them. Second, this work proposes the IGA-BP model based on neural network to evaluate the teaching quality of computer courses for film and television media majors. In view of the excellent global optimization ability of GA and the defects of the BP algorithm itself, this work adopts the improved GA algorithm to optimize the BP network, and establishes an IGA-BP network combination model with higher prediction accuracy. Third, this work has carried out sufficient experiments, and the experimental results have verified that the IGA-BP network can effectively evaluate the teaching quality of computer courses in film and television media majors. In addition, the comparative experiment also verifies that the computer course design scheme proposed in this work can effectively improve the teaching quality.

Data Availability

The datasets used during the current study are available from the corresponding author on reasonable request.

Conflicts of Interest

The authors declare that there have no conflicts of interest.

References

[1] J. Stadler and K. McWilliam, *Screen Media: Analysing Film and Television*, Routledge, 2020.

[2] Y. Hu, "Research on the implementation of happy teaching in film and television professional courses of college," *Creative Education*, vol. 11, no. 3, pp. 321–327, 2020.

[3] J. Hammett-Jamart, P. Mitric, and E. Redvall, *European Film and Television co-Production*, Policy and Practice, 2018.

[4] W. Sun, H. Wang, and L. Ye, "The cultural art aesthetic behavior of entrepreneurship education for college students in the characteristics of film and television media," *Frontiers in Psychology*, vol. 13, 2022.

[5] K. Sutter, *Distribution Revolution: Conversations about the Digital Future of Film and Television*, Univ of California Press, 2014.

[6] M. Wang, Y. Shao, S. Fu, L. Ye, H. Li, and G. Yang, "The influence of college students' Innovation and entrepreneurship intention in the art field of art film and television appreciation by deep learning under entrepreneurial psychology," *Frontiers in Psychology*, vol. 13, 2022.

[7] Y. Zhu and B. Robinson, "Cross-fertilization in Chinese cinema and television," *A Companion to Chinese Cinema*, vol. 429, 2012.

[8] T. Jenkins, *The CIA in Hollywood: how the agency shapes film and television*, University of Texas Press, 2016.

[9] G. Geisler, G. Willard, and C. Ovalle, "A crowdsourcing framework for the production and use of film and television data," *New Review of Hypermedia and Multimedia*, vol. 17, no. 1, pp. 73–97, 2011.

[10] C. Du and C. Yu, "Impact of virtual imaging technology on film and television production education of college students based on deep learning and Internet of Things," *Frontiers in Psychology*, vol. 12, 2022.

[11] J. Liu and Y. Q. Zhang, "Research on graphic-text relationship in film and television works based on big data model," *Mobile Information Systems*, vol. 2022, Article ID 8677164, 8 pages, 2022.

[12] A. A. Klein and R. B. Palmer, *Cycles, sequels, spin-offs, remakes, and reboots: Multiplicities in film and television*, University of Texas Press, 2016.

[13] W. Mayrhofer, J. Steyrer, M. Meyer, G. Strunk, M. Schiffinger, and A. Iellatchitch, "Graduates' career aspirations and individual characteristics," *Human Resource Management Journal*, vol. 15, no. 1, pp. 38–56, 2005.

[14] F. Yan, "Discussing the Film and Television Education from the Perspective of Xi Jinping's Literary Thoughts," in *International Conference on Modern Management, Education Technology and Social Science (MMETSS 2019)*, pp. 579–582, 2019.

[15] Z. Chen, "Study on the Application of Film and Television Education in Cultivation of College Students' Values," *Educational Sciences: Theory & Practice*, vol. 18, no. 5, 2018.

[16] M. Shen and B. Li, "A probe into the cultivation path of national defense education in colleges and universities
—taking the Department of Film and Television Art of Shanghai Publishing and Printing College as an example," *Creative Education*, vol. 11, no. 11, pp. 2346–2353, 2020.

[17] Y. Li and Y. Guo, "The current situation, problems, and suggestions of film and television education in primary and middle schools," *Journal of Literature and Art Studies*, vol. 9, no. 9, pp. 990–995, 2019.

[18] B. Zhang and Y. Teng, "A practical exploration of "ideological and political course" in film and television art education—take the "project training of 2D animation creation" as an example," *Open Journal of Social Sciences*, vol. 8, no. 9, pp. 229–236, 2020.

[19] S. Dan, "Value Significance and Path Construction of Film and Television Education in Primary and Secondary Schools under the Background of 5G," *Frontiers in Art Research*, vol. 2, no. 8, 2020.

[20] J. Zhang, "Using film and television project research and Innovation to promote the Innovation ability of undergraduates," *International Journal of Social Sciences in Universities*, vol. 252, 2019.

[21] N. Dai, "Innovation Research on Film and Television Art Education Reform Based on Multimodal Environment," in *International Conference on Arts, Design and Contemporary Education (ICADCE 2021)*, pp. 681–686, 2021.

[22] K. Cozine, "Setauket to Abbottabad: the value of film and television in teaching human Intelligence," *Journal of Strategic Security*, vol. 8, no. 3, pp. 80–92, 2015.

[23] Y. Hu, "Research on the Platform Construction of Multimedia Technology Education Curriculum System in Film and Television," in *EAI International Conference, BigIoT-EDU*, pp. 530–536, Cham, 2021.

[24] J. J. M. Fariña, "A model for teaching bioethics and human rights through cinema and popular TV series: a methodological approach," *Counselling Psychology Quarterly*, vol. 22, no. 1, pp. 105–117, 2009.

[25] R. L. Duran, B. Yousman, K. M. Walsh, and M. A. Longshore, "Holistic media education: an assessment of the effectiveness of a college course in media literacy," *Communication Quarterly*, vol. 56, no. 1, pp. 49–68, 2008.

[26] J. Start and K. Dudt, "Mobile Video Production Systems at College and University Television Stations: Is it appropriate for My University," in *Society for Information Technology & Teacher Education International Conference*, pp. 1109–1114, Charleston, SC, USA, 2009.

[27] W. Zhang and Y. Wang, "Analyze the application of multimedia Technology in the Special Effects of film and television animation-from the animated short film of "day after day"," *International Journal of Social Science and Education Research*, vol. 2, no. 11, pp. 10–15, 2020.

[28] A. Domínguez, J. Saenz-de-Navarrete, L. De-Marcos, L. Fernández-Sanz, C. Pagés, and J. J. Martínez-Herráiz, "Gamifying learning experiences: Practical implications and outcomes," *Computers & education*, vol. 63, pp. 380–392, 2013.

[29] L. Rosewarne, "School of shock: film, television and anal education," *Sex Education*, vol. 15, no. 5, pp. 553–565, 2015.

[30] S. Ge, "Research on the Application of New Media Technology in The Teaching of Film and Television Aesthetics," in *International Conference on Intelligent Computation Technology and Automation (ICICTA)*, pp. 206–209, Xi'an, China, 2020.

[31] D. Ashton, "Making media Workers," *Television & New Media*, vol. 16, no. 3, pp. 275–294, 2015.