Active and Passive Elec. Comp., 1995, Vol. 18, pp. 171–177
Reprints available directly from the publisher
Photocopying permitted by license only

NEW UNIVERSAL ONE-INPUT FIVE-OUTPUT CURRENT-MODE FILTER USING CURRENT-CONVEYORS

MUHAMMAD TAHER ABUELMA'ATTI
and AAMIR ALAM FAROOQUI
King Fahd University of Petroleum and Minerals
Box 203 Dhahran 31261 Saudi Arabia

A new universal active current-mode filter with single input and five outputs is presented. The proposed filter avoids the use of feedback in any part of the circuit and uses only grounded resistors and grounded capacitors. The proposed circuit can simultaneously realize lowpass, highpass, bandpass, allpass, and notch biquadratic filter functions.

INTRODUCTION

At present, there is a growing interest in designing current-mode current-conveyor-based active filters. This is attributed to their higher signal bandwidths, greater linearity, and larger dynamic range [1]. Thus, a number of circuit realizations for universal current-mode filters have been proposed [2–11]. A critical study shows that while some of the proposed circuits use grounded resistors and capacitors [2–7], other circuits use floating resistors and/or capacitors [8–11]. The majority of the proposed circuits can realize all the basic biquadratic filter functions, that is, lowpass, highpass, bandpass, allpass, and notch. However, this cannot be achieved simultaneously. Finally, most of the circuits employ feedback in part of the circuit in order to realize the transfer function required. This may result in instability problems, especially at high frequencies where the non-idealities of the current-conveyors cannot be ignored.

As an illustrative example, consider the most-recent circuit proposed by Chang [2]. While the circuit can simultaneously realize lowpass, highpass, and bandpass functions, to obtain an allpass function it is necessary to connect the three output currents. Similarly, to obtain a notch function it is necessary to connect the highpass and the lowpass output currents. Thus, the five basic filter functions cannot be realized simultaneously. While the circuit has the advantage of using grounded resistors and capacitors, it employs feedback in part of it.

In order to avoid the possible instability problems that may arise due to the employment of feedback, it is necessary to avoid using feedback throughout the whole circuit. Also, it would be attractive for integration if a proposed implementation, avoiding the employment of feedback, can be realized using grounded resistors and capacitors. It is the purpose of this paper to present such a realization.

PROPOSED CIRCUIT

The proposed circuit is shown in Fig. 1. Using the standard notation the characteristics of the current conveyors can be described by $i_x = \pm i_z$, $i_y = 0$, $v_x = v_y$ for the CCII $\pm$ and $i_x = i_y = \pm i_z$, $v_x = v_y$ for the CCI $\pm$. Routine analysis of the circuit yields the following transfer functions

$$\frac{I_{01}}{I_i} = \frac{Z_1 Z_3}{(Z_2 - Z_1)Z_5} \tag{1}$$

$$\frac{I_{02}}{I_i} = \frac{sCRZ_1 Z_3}{(Z_2 - Z_1)Z_5} \tag{2}$$

and

$$\frac{I_{03}}{I_i} = \frac{Z_1 Z_3}{(Z_2 - Z_1)Z_4} \tag{3}$$

Now if we choose

$$Z_1 = \frac{R_1}{1 + sC_1R_1},\ Z_2 = R_2,\ Z_3 = \frac{R_3}{1 + sC_3R_3},\ Z_4 = \frac{1}{sC_4},\ Z_5 = R_5$$

then equations (1)–(3) reduce to

$$\frac{I_{01}}{I_i} = \frac{1/R_2R_5C_1C_3}{s^2 + s(1/C_1R_1 + 1/C_3R_3 - 1/C_1R_2) + (R_2 - R_1)/C_1C_3R_1R_2R_3} \tag{4}$$

$$\frac{I_{02}}{I_i} = \frac{s^2CC_4R/R_2C_1C_3}{s^2 + s(1/C_1R_1 + 1/C_3R_3 - 1/C_1R_2) + (R_2 - R_1)/C_1C_3R_1R_2R_3} \tag{5}$$

and

$$\frac{I_{03}}{I_i} = \frac{sC_4/R_2C_1C_3}{s^2 + s(1/C_1R_1 + 1/C_3R_3 - 1/C_1R_2) + (R_2 - R_1)/C_1C_3R_1R_2R_3} \tag{6}$$

Equation (4) corresponds to the transfer function of a lowpass filter, equation (5) corresponds to the transfer function of a highpass filter and equation (6) corresponds to the transfer function of a bandpass filter.
By connecting I_{01}, I_{02} and $-I_{03}$ the resulting current transfer function can be

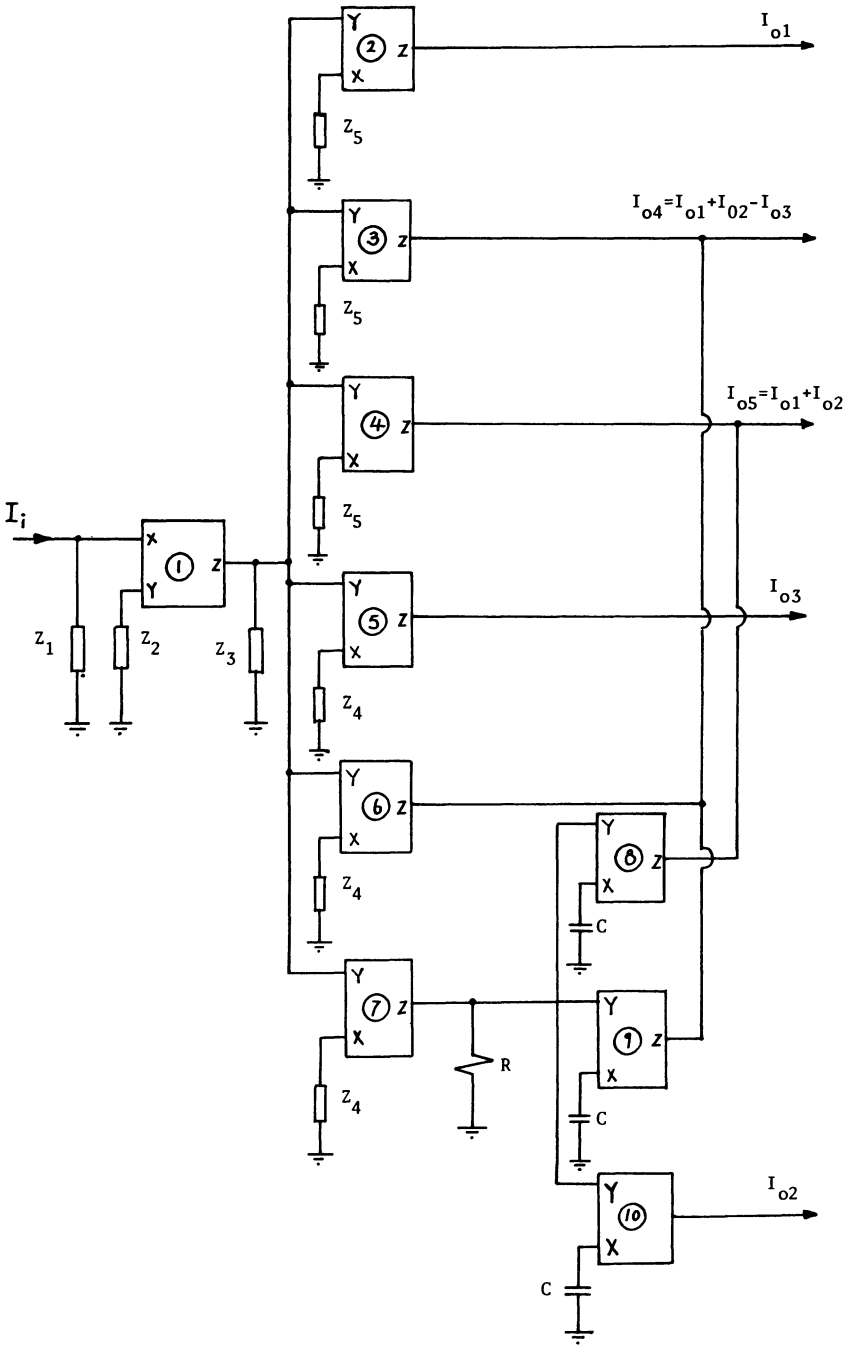

FIGURE 1 Proposed structure for realizing current-mode lowpass, highpass, bandpass, notch and allpass filters. All current-conveyors are CCII + except CC #1 is CCI- and CC #6 is CCII-.

expressed as

$$\frac{I_{04}}{I_i} = \frac{(CC_4R/C_1C_3R_2)(s^2 - s/CR + 1/C_4CR_5R)}{s^2 + s(1/C_1R_1 + 1/C_3R_3 - 1/C_1R_2) + (R_2 - R_1)/C_1C_3R_1R_2R_3} \tag{7}$$

If we choose

$$1/CR = 1/C_1R_1 + 1/C_3R_3 - 1/C_1R_2$$

and

$$CC_4RR_5 = C_1C_3R_1R_2R_3/(R_2 - R_1)$$

equation (7) reduces to

$$\frac{I_{04}}{I_i} = \frac{(RCC_4/R_2C_1C_3)(s^2 - s(1/C_1R_1 + 1/C_3R_3 - 1/C_1R_2) + (R_2 - R_1)/C_1C_3R_1R_2R_3)}{s^2 + s(1/C_1R_1 + 1/C_3R_3 - 1/C_1R_2) + (R_2 - R_1)/C_1C_3R_1R_2R_3} \tag{8}$$

Equation (8) corresponds to the transfer function of an allpass filter.
Similarly, by connecting the currents I_{01} and I_{02} the resulting current transfer function can be expressed as

$$\frac{I_{05}}{I_i} = \frac{(CC_4R/C_1C_3R_2)(s^2 + 1/C_4CR_5R)}{s^2 + s(1/C_1R_1 + 1/C_3R_3 - 1/C_1R_2) + (R_2 - R_1)/C_1C_3R_1R_2R_3} \tag{9}$$

Equation (9) corresponds to the transfer function of a current-mode elliptic filter with a zero located at

$$\omega_z^2 = 1/C_4CR_5R \tag{10}$$

and a pole located at

$$\omega_p^2 = (R_2 - R_1)/C_1C_3R_1R_2R_3 \tag{11}$$

From (10) and (11) the zero-pole ratio can be expressed as

$$\frac{\omega_z}{\omega_p} = \left(\frac{C_1C_3R_1R_2R_3}{(R_2 - R_1)C_4CR_5R}\right)^{1/2} \tag{12}$$

From (12), one can see that the zero-pole ratio can be adjusted by tuning grounded resistors and/or grounded capacitors. Also, a notch filter can be realized by making the zero-pole ratio equal to unity.
From (4)–(9), one can see that the parameters ω_0^2 and $\frac{\omega_0}{Q_0}$ of the proposed current-mode filter realizations are given by

$$\omega_0^2 = (R_2 - R_1)/C_1C_3R_1R_2R_3 \tag{13}$$

and

$$\frac{\omega_0}{Q_0} = 1/C_1R_1 + 1/C_3R_3 - 1/C_1R_2 \tag{14}$$

From (13) and (14), one can see that the parameters ω_0 and $\frac{\omega_0}{Q_0}$ can be adjusted by tuning grounded resistors and/or capacitors. Moreover, from (13) and (14), it is obvious that proper selection of resistor and capacitor values can yield high values of Q_0. Also, low values of ω_0 can be achieved without recourse to large values of resistors and/or capacitors. This is attributed to the difference term in equation (13).

SIMULATION RESULTS

To verify its operation, the proposed circuit has been simulated using PSPICE. The CCII ± has been simulated using an operational amplifier together with current mirrors composed of transistor arrays [12] and the CCI- has been simulated using the translinear CC implementation [13]. The results obtained from the

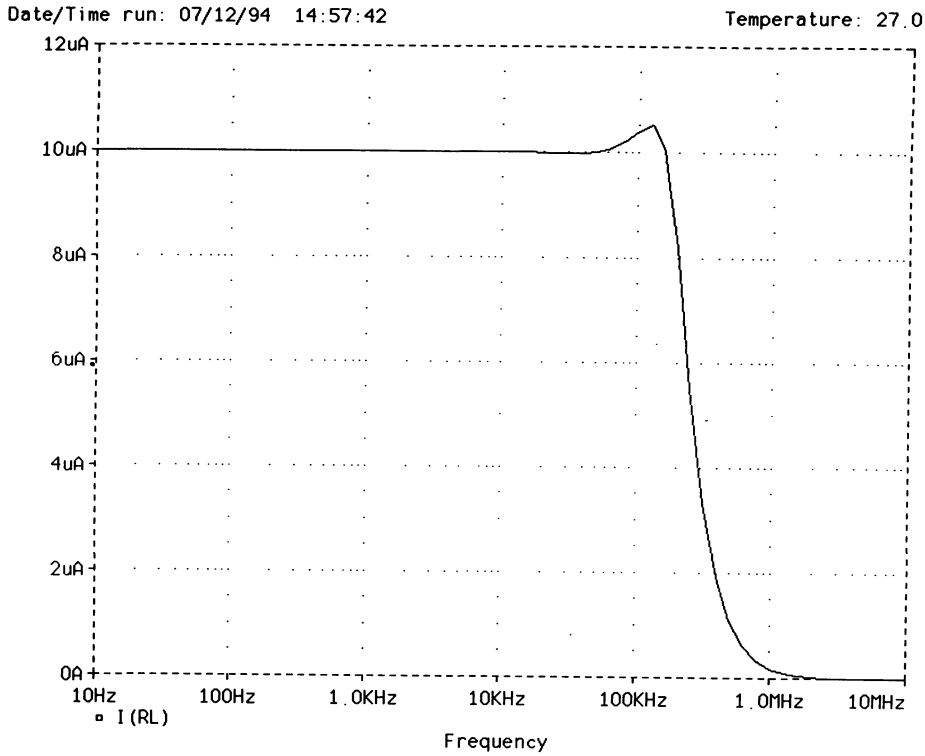

FIGURE 2 Simulated lowpass characteristics obtained from Fig. 1 with

$R_1 = 10M\Omega$, $R_2 = 13k\Omega$, $R_3 = 10k\Omega$, $R_5 = 1k\Omega$, $C_1 = C_3 = 220pF$

The output current is sensed by connecting a load resistance = $100k\Omega$ at the output of CC #2.

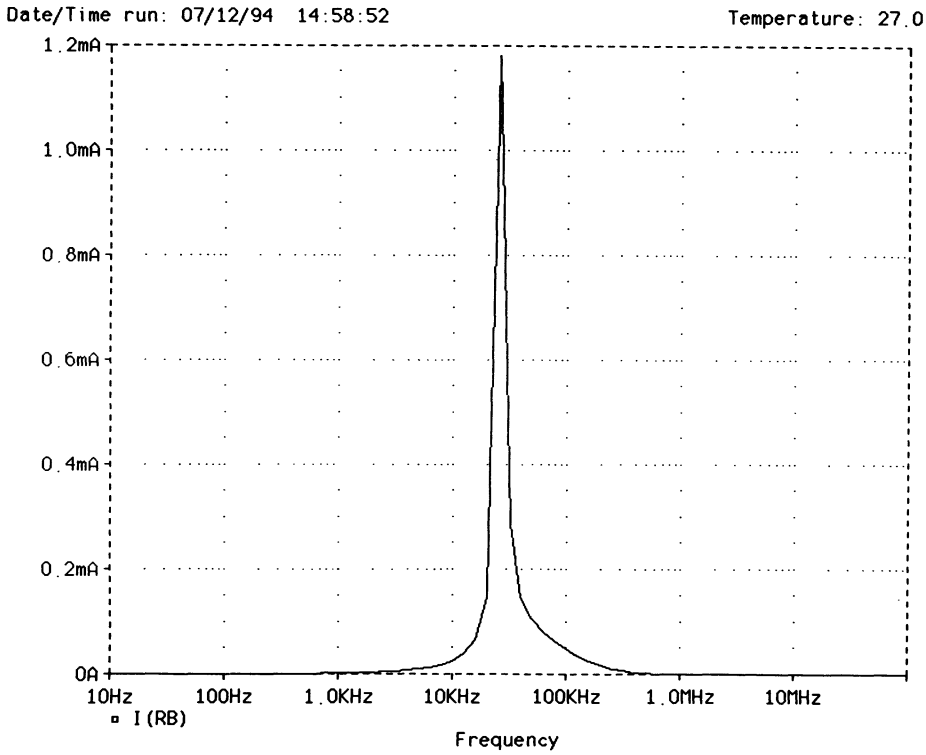

FIGURE 3 Simulated bandpass characteristic obtained from Fig. 1 with

$R_1 = R_3 = 10k\Omega$, $R_2 = 100k\Omega$, $R_5 = 1k\Omega$, $C_1 = C_3 = 220pF$, $C_4 = 0.22\mu F$

The output current is sensed by connecting a load resistance = $100k\Omega$ at the output of CC #5.

lowpass and the bandpass filters are shown in Figs. 2 and 3. These results are in good agreement with the theory.

CONCLUSION

In this paper a new universal current-mode filter using current-conveyors has been presented. The circuit uses ten current conveyors and can simultaneously realize the five standard biquadratic filter functions; the lowpass, the highpass, the bandpass, the allpass, and the notch filters. Proper selection of the resistor and/or capacitor values can yield high values of Q_0 and low values of ω_0 without recourse to large values of resistances and/or capacitors.

REFERENCES

1. G.W. Roberts and A.S. Sedra, All current-mode frequency selective circuits, Electronics Letters, Vol. 25, 1989, pp. 759–761
2. C.-M. Chang, Novel universal current-mode filter with single input and three outputs using only five current conveyors, Electronics Letters, Vol. 29, 1993, pp. 2005–2007

3. C.-M. Chang, Universal active current filter with single input and three outputs using CCIIs, Electronics Letters, Vol. 29, 1993, 1932–1933
4. C.-M. Chang and P.-C. Chen, Universal active current filter with three inputs and one output using current conveyors, International Journal of Electronics, Vol. 71, 1991, pp. 817–819
5. C.-M. Chang, and P.-C. Chen, Realization of current-mode transfer function using second-generation current conveyors, International Journal of Electronics, Vol. 71, 1991, pp. 805–815
6. Y. Sun and J.K. Fidler, Versatile active biquad based on second-generation current conveyors, International Journal of Electronics, Vol. 76, 1994, pp. 91–98
7. C.-M. Chang, C.-C. Chien and H.-Y. Wang, Universal active current filter with three inputs using current conveyors-Part 2, International Journal of Electronics, Vol. 76, 1994, pp. 87–89
8. C.-M. Chang, Current-mode lowpass, bandpass and highpass biquads using two CCIIs, Electronic Letters, Vol. 29, 1993, pp. 2020–2021
9. C.-M. Chang, Universal active current filters using single second-generation current conveyor, Electronics Letters, Vol. 27, 1991, pp. 1614–1617
10. C.-M. Chang, C.-C. Chien and H.-Y. Wang, Universal active current filters using single second-generation current conveyor, Electronics Letters, Vol. 29, 1993, pp. 1159–1160
11. D.-S. Wu, Y.-S. Hwang, S.-I. Liu and Y.-P. Wu, New multifunction filter using an inverting CCII and a voltage follower, Electronics Letters, Vol. 30, 1994, pp. 551–552
12. B. Wilson, High-performance current conveyor implementation, Electronics Letters, Vol. 20, 1984, pp. 990–991
13. A. Fabre, Wideband translinear current conveyor, Electronics Letters, Vol. 20, 1984, pp. 241–242