Active and Passive Elec. Comp., 1999, Vol. 22, pp. 121–128

MEASUREMENT OF SELF-HEATING AFFECTED DYNAMIC ERROR OF PRECISION WIRE-WOUND RESISTORS

ZSOLT SZEPESSY*

Technical University of Budapest, Department of Measurement and Information Systems, 9. Muegyetem rkp., Budapest, 1111, Hungary

(Received 8 January 1999; In final form 9 March 1999)

This paper presents the thermal dynamic model of wire-wound resistors. In order to identify the thermal model an active bridge circuit is discussed. The power step response of the wire-wound resistors can be measured with the resolution of 1 ppm using the detailed circuit. Experimental results are also presented.

Keywords: Precision wire-wound resistor; self-heating; thermal dynamic error; high precision instrumentation

INTRODUCTION

Precision wire-wound resistors are widely used in the input circuits of electric instruments. These components form voltage dividers, current to voltage converters *etc.* The accuracy of the mentioned instruments is limited by the errors of these system elements. The transfer ratio of the input stages must be stable while the input signal varies in a relatively wide range (0..10 A, 0..300 V). Precision wire-wound resistors that form the input stages have the following error components:

- initial tolerance of resistance – can be corrected by calibration,
- long term drift – can be corrected by regular recalibration procedures,

*e-mail: zszepes@mmt.bme.hu

- parasitic impedances – can be trimmed at a given frequency by additional capacitors,
- temperature dependence is defined as the sensitivity to the ambient temperature variation. Since this error can be considered as a static error during the measurements because of the slow temperature variation, this component can be reduced by stabilizing the environmental temperature or regular recalibration procedure of the transfer ratio.

There are other error components that are important only in high precision applications (*e.g.*, metrology instruments, normal resistors, reference voltage dividers).

A significant error source is originated from the self-heating phenomenon. This error is referred as the thermal dynamic error (TDE). The thermal dynamic error is determined by the actual operating current, that flows through the resistor. The current generates heat (Joule-heat), that increases the actual temperature of the resistor wire and indirectly changes the actual resistance. The resultant temperature change depends on the material structure of the resistor, the environmental heat sources, the ambient temperature and the geometry of the arrangement [1]. The magnitude of the error depends strongly on the type of the resistor [2].

A precision wire-wound resistor is built of a ceramic bobbin, the resistor wire wound on the bobbin and the system is encapsulated by a plastic case. The thermal dynamic behaviour may be described by a one-time-constant linear model, characterized by two parameters: the thermal resistance (R_ν, K/W) and the thermal time constant (T, s) [3]. The thermal dynamic error of a typical precision wire-wound resistor is in the range of 0 – 100 ppm if the applied power varies between zero and the nominal power of the component (0 – 1.5 W). The typical thermal time constants are in the range of 100 – 600 s. In the case of calibration instruments where the key task is the fast and high precision measurement (1 measurement per second, 10 ppm basic accuracy), the thermal dynamic error of the built-in precision wire-wound resistors must be corrected. The correction may be based on a special online error estimation. The high precision calibration instruments regularly contain an embedded computer that manages the measurement procedure. The identified thermal model based error estimation may be processed by the operating software of the embedded computer.

The model based self-correction procedure can increase the accuracy of the final measurement results by one order of magnitude. The model identification procedure is a difficult measurement problem. The model parameters can be determined from the power step response of the investigated precision resistor. The relative resistance error must be measured with a resolution 1 ppm. Since the dynamic error characteristics can be examined in a long power step response measurement (usually longer than 15 minutes), the stability of the test set up is a significant requirement. In order to measure a significant thermal dynamic error on a precision resistor of 10 kΩ and a rated power of 1.5 W the test circuit must be capable to apply hundreds of volts on the component. This demand requires special circuitry (large common mode rejection ratio, proper shielding).

The measurement circuit is required to have a selective sensitivity to the investigated phenomenon, and needs to reject other error components (the TDE of other resistors, voltage dependence, parasitic impedances).

The active bridge circuit that meets the detailed requirements is introduced below.

THE ACTIVE BRIDGE CIRCUIT

Our investigation is focused on a commercially available precision wire-wound resistor. The resistor has the following parameters:

Nominal resistance:	50 kΩ
Initial tolerance:	0.01%
Rated power:	1.5 W
Temperature coefficient:	5 ppm/K
Inductance:	0.1 μH
Long term stability:	0.05%/2000 hours

The thermal dynamic error measuring circuit can be seen in Figure 1. R_X denotes the resistor under test, R_N is the reference resistor, R_{B1}, R_{B2} are film type resistors. V_G stands for the input voltage source, $A1$ is an instrumentation amplifier, $A2$ is an operational amplifier.

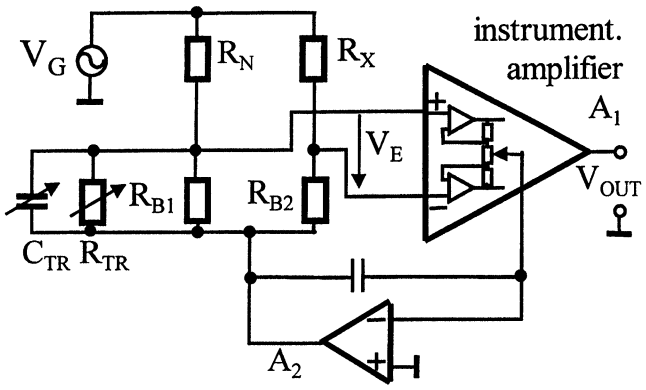

FIGURE 1 Active bridge circuit to measure the thermal dynamic error of R_X.

The circuit operation is as follows:

1. The measured wire-wound resistor is R_X. The resistors denoted by R_X, R_N, R_{B1}, R_{B2} form the bridge. The relation between the nominal resistances is as follows: $R_X = R_N$, $R_{B1} = R_{B2}$, $R_{B1} = R_X/50$. The reference resistor R_N is composed of 16 resistors as can be seen in Figure 2. Each element has the same type as R_X. If the same voltage supplies R_X and R_N, the dissipation of one element of R_N are 16 times smaller than that of R_X. Consequently the thermal dynamic error of R_N is negligible compared to that of R_X. The error of R_{B1} and R_{B2} can also be disregarded because the voltage on these components is 50 times smaller than the voltage on R_X.
2. The bridge is supplied with V_G generator and the output of A_2 operational amplifier. The V_E voltage is amplified with A_1 instrumentation amplifier. If the bridge is balanced at low level V_{G0} and

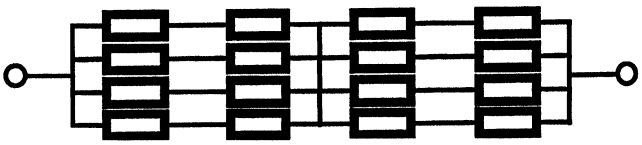

FIGURE 2 Construction of R_N using 16 resistors of the same type as R_X.

the generator voltage is raised to V_{G1} as a step sign, the peak value of the output of the circuit (V_{OUT}) is proportional to the thermal dynamic error of R_X.

3. As a result of the feedback through A_2 the common mode voltage of the instrumentation amplifier A_1 is set to zero. The CMRR of the measurement circuit is increased $\mathrm{CMRR}_{\mathrm{TOTAL}} = \mathrm{CMRR}_{A1} * A2$. V_G is applied on R_X and R_N so the generator voltage can control the power dissipation of these elements.

V_{OUT} can be expressed as follows:

$$V_{\mathrm{OUT}} = V_G \cdot K \cdot A_1 \cdot (\alpha_N - \alpha_X), \tag{1}$$

where

$$K = 1 - \frac{\alpha_N + \alpha_X}{\alpha_N + \alpha_X - 2 \cdot \left(1 - \frac{1}{A_2}\right)}, \tag{2}$$

$$\alpha_N = \frac{R_{B1}}{R_{B1} + R_N}, \tag{3}$$

$$\alpha_X = \frac{R_{B2}}{R_{B2} + R_X}. \tag{4}$$

In Eqs. (1)–(4) we can recognize the following error components that influences the output voltage:

1. The dissipation affected thermal dynamic error of R_X.
   Sensitivity to the relative error of R_X neglecting the error of R_N, R_{B1}, R_{B2}.

$$S_{RX} = \frac{\partial V_{\mathrm{OUT}}}{\partial R_X} \cdot R_X = R_X \cdot K \cdot A1 \cdot V_G \cdot \frac{R_{B2}}{(R_{B2} + R_X)^2}. \tag{5}$$

2. The instability of V_G. Sensitivity to the relative change of V_G:

$$S_{V_G} = \frac{\partial V_{\mathrm{OUT}}}{\partial V_G} \cdot V_G = V_G \cdot A1 \cdot K \cdot (\alpha_N - \alpha_X). \tag{6}$$

3. The instability of the gain of $A1$. Sensitivity to the relative change of gain:

$$S_{A1} = \frac{\partial V_{\mathrm{OUT}}}{\partial A1} \cdot A1 = V_G \cdot A1 \cdot K \cdot (\alpha_N - \alpha_X). \tag{7}$$

Comparing (1) and (6), (7) equations, we can see that in order to minimize the effect of the instability of V_G and the instability of the gain of $A1$ the output voltage of the circuit V_{OUT} must be set to zero using C_{TR}, R_{TR} components before measurement.

RESULTS

The circuit in Figure 1 was built with the components detailed in the next table:

Component	*Parameters*
R_X:	50 kΩ, 0.01%, 1.5 W
R_{B1}, R_{B2}:	1 kΩ, 0.01%, film type
$A1$:	PGA201, gain 512
$A2$:	OPA 27
V_G:	FLUKE 5200 AC calibrator

Measurement steps:

a. $V_{G0} = 10\,\mathrm{V}$, 70 Hz, $V_{G1} = 110\,\mathrm{V}$, 70 Hz, $S_{RX} = 3.123\,\mathrm{mV/ppm}$
b. $V_{G0} = 10\,\mathrm{V}$, 70 Hz, $V_{G1} = 180\,\mathrm{V}$, 70 Hz, $S_{RX} = 5.110\,\mathrm{mV/ppm}$.

Substituting the actual values in (6) and (7) considering the actual S_{RX}, and the 1 ppm resolution criteria, the following requirements are obtained: the relative error of V_G and $A1$ must be smaller than 3%.

Measuring the output voltage and using the calculated sensitivities the results shown in Figure 3 were obtained. Exponential curves were fitted to the results using least mean squares method. The thermal dynamic error of the investigated resistor due to $V_{G0} \rightarrow V_{G1}$ step change in applied voltage can be expressed as follows:

$$V_{G1} = 110\,\mathrm{V}\ TDE(t) = 4.20 \cdot \left(1 - \mathrm{e}^{(-t/400.6)}\right)\ (\mathrm{ppm})$$
$$V_{G1} = 180\,\mathrm{V}\ TDE(t) = 34.91 \cdot \left(1 - \mathrm{e}^{(-t/373.9)}\right)\ (\mathrm{ppm})$$

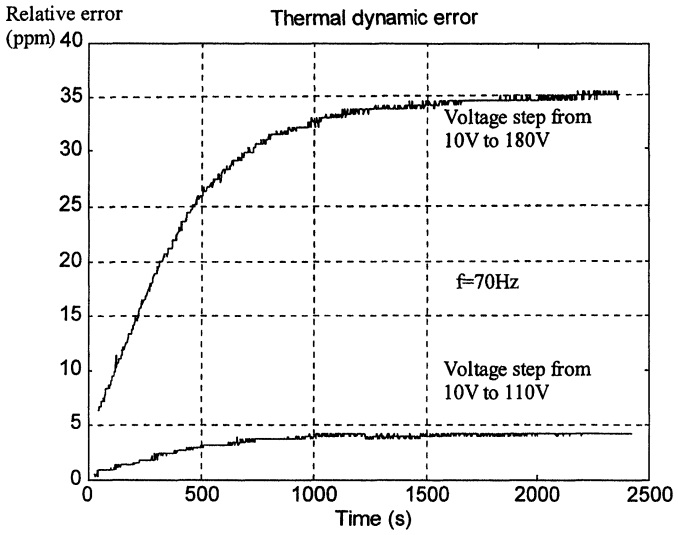

FIGURE 3 The thermal dynamic error of the investigated resistor for different voltage steps.

The average relative difference between the measured and the estimated values remains below 5%.

CONCLUSION

An active bridge circuit has been presented to determine the self-dissipation affected thermal dynamic error of precision wire-wound resistors. Using the described circuit measurement of resistance change with the resolution of 1 ppm can be made. The achieved resolution makes it possible to measure the dynamic thermal characteristics of high precision wire-wound resistors. The configuration can be used for recording the static temperature characteristics, for identification of the thermal dynamic model, to estimate the long-term stability of precision resistors.

Using the identified thermal dynamic model the on-line error estimation can provide correction data for adequate measurement software. This on line self correcting procedure might reduce the influence of the self-heating affected instability of reference resistors.

References

[1] Eckert, E. R. G. and Drake, Robert M. Jr. (1972). Analysis of heat and mass transfer, McGraw-Hill, pp. 3–27, 147–158.

[2] Deep, Gurdip S., Freire, Raimundo C. S., Lobo, Pio C., Neto, Jose S. R. and Lima, Antoniop M. N., Dynamic Response of Thermoresistive Sensors, *IEEE Trans. on Instrum. and Meas.*, **41**(6), December 1992.

[3] Szepessy, Zs. (1996). Precision Resistor of Reduced Dynamic Error, In: *Conf. Digest Conference on Precision Electromagnetic Measurements*, Braunschweig, Germany, pp. 398–399.