Active and Passive Elec. Comp., 2000, Vol. 23, pp. 157–161
Reprints available directly from the publisher
Photocopying permitted by license only

MULTI-FUNCTION ACTIVE-ONLY HIGH-ORDER CURRENT-DRIVEN FILTER

MUHAMMAD TAHER ABUELMA'ATTI*
and HUSAIN ABDULLAH ALZAHER

King Fahd University of Petroleum and Minerals, Box 203, Dhahran 31261, Saudi Arabia

(Received 29 April 2000; In final form 12 July 2000)

A new multi-function high-order current-driven filter is proposed. The filter uses only operational amplifiers, and operational transconductance amplifiers (OTAs). Without using any external passive elements, a variety of high-order input-current/output-current and/or input-current/output-voltage responses can be realised without changing the circuit topology and without any matching or cancellation conditions. The parameters of the high-order filter responses can be electronically tuned by adjusting the bias currents of the OTAs.

Keywords: Active filters; Operational amplifiers; Operational transconductance amplifiers

INTRODUCTION

At present, there is a growing interest in designing capacitorless-resistorless current-mode active-only filters using only active-elements, such as operational amplifiers (OAs) and operational transconductance amplifiers (OTAs). This is attributed to their integratability, programmability and wide frequency range of operation [1, 2]. The circuits reported in [1, 2] can realise second-order lowpass, highpass, bandpass and notch transfer functions, without any matching or cancellation conditions. Realisation of allpass transfer functions is also feasible.

*Corresponding author.

The work to be presented in this paper is an attempt to extend the applications of capacitorless-resistorless active-only realisations to the domain of high-order filters. Obviously, high-order filters can be obtained by cascading second-order realisations. However, this approach usually requires an extensive number of active components. For example, the realisation of an Nth-order response, $N=$ even integer, using the structure proposed in [2] requires N OAs and $5N/2$ OTAs. Similarly, the realisation of an Nth-order response using the structure proposed in [1] requires $3N/2$ OTAs and N OAs. It will be shown, in this paper, that an Nth-order response, with $N=$ even integer, can be realised using N OAs and $N+1$ OTAs only. Thus, the proposed realisation saves $(N/2-1)$ OTAs. Moreover, while the realisations of [1] and [2] can support only one output response at a time, the proposed realisation can simultaneously support a variety of output responses.

PROPOSED CIRCUIT

The proposed circuit is shown in Figure 1. Using standard notations, the OTA can be characterised by $i = g_{m_k}(v_+ - v_-)$, where $g_{m_k} = (I_{ABCk}/2V_T)$ is the transconductance of the kth OTA, I_{ABCk} is the auxiliary bias-current, V_T is the thermal voltage and v_+ and v_- are

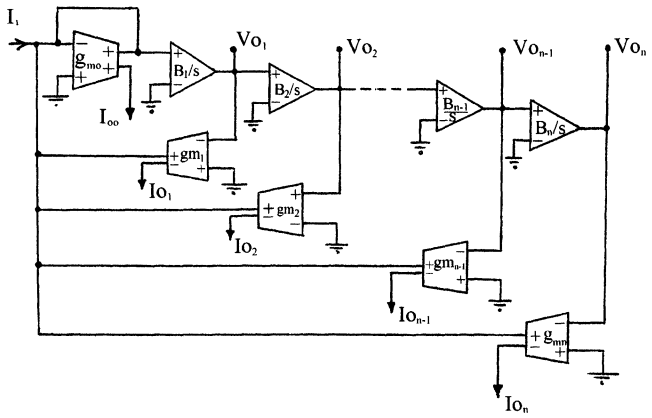

FIGURE 1 Proposed active-only nth-order filter.

the input voltages of the OTA. Assuming internally compensated operational amplifiers with open-loop gain of $A=(B_k/s)$, where B_k is the gain-bandwidth product of the kth operational amplifier, routine analysis yields the current transfer functions given by

$$\frac{I_{o_k}}{I_i}=\frac{(g_{m_k}/g_{m_o})\prod_{m=1}^{k}B_m s^{n-k}}{s^n+(g_{m_1}/g_{m_o})B_1 s^{n-1}+(g_{m_2}/g_{m_o})B_1B_2 s^{n-2}+\cdots+(g_{m_n}/g_{m_o})\prod_{m=1}^{n}B_m}$$
$$=\frac{a_k s^{n-k}}{s^n+b_1 s^{n-1}+b_2 s^{n-2}+\cdots+b_n} \tag{1}$$

and the voltage transfer functions given by

$$\frac{V_{o_k}}{I_i}=\frac{(1/g_{m_o})\prod_{m=1}^{k}B_m s^{n-k}}{s^n+(g_{m_1}/g_{m_o})B_1 s^{n-1}+(g_{m_2}/g_{m_o})B_1B_2 s^{n-2}+\cdots+(g_{m_n}/g_{m_o})\prod_{m=1}^{n}B_m}$$
$$=\frac{c_k s^{n-k}}{s^n+b_1 s^{n-1}+b_2 s^{n-2}+\cdots+b_n} \tag{2}$$

Thus, the circuit of Figure 1 can, simultaneously, support $(n+1)$ high-impedance output currents and n low-impedance output voltages.

From (1) and (2) the parameters a_k, $k=0-n$ and c_k, $k=1-n$ can be expressed as

$$a_k=\frac{g_{m_k}}{g_{m_o}}\prod_{m=1}^{k}B_m \tag{3}$$

and

$$c_k=\frac{a_k}{g_{m_k}} \tag{4}$$

And the parameters b_l, $l=1-n$ can be expressed as

$$b_l=\frac{g_{m_l}}{g_{m_o}}\prod_{m=1}^{l}B_m \tag{5}$$

From (5) it can be seen that the parameters b_l, $l=1-n$ can be independently adjusted by controlling the transconductances g_{m_l}, $l=1-n$. Thus, the proposed circuit enjoys electronic tunability of its parameters.

SIMULATION RESULTS

The circuit of Figure 1 was used to realise the 4th-order lowpass Butterworth current transfer function given by (Tab. 2.2 of [3])

$$H(s) = \frac{1}{s^4 + 2.61312593s^3 + 3.41421356s^2 + 2.61312593s + 1} \tag{6}$$

Equation (6) can be written in a normalised form as follows

$$H\left(\frac{s}{\omega_o}\right) = \frac{\omega_o^4}{s^4 + 2.61312593\omega_o s^3 + 3.41421356\omega_o^2 s^2 + 2.61312593\omega_o^3 s + \omega_o^4} \tag{7}$$

With $\omega_o = 2\pi$ Mrad/sec, $B = 2\pi(4.1345)$ Mrad/sec and if we choose $g_{m_o} = 200\,\mu\text{A/V}$ then $g_{m_1} = 126.41\,\mu\text{A/V}$, $g_{m_2} = 39.95\,\mu\text{A/V}$, $g_{m_3} = 7.395\,\mu\text{A/V}$, $g_{m_4} = 0.684\,\mu\text{A/V}$. The operational amplifier LF156, with $B = 2\pi(4.1345)$ Mrad/sec and the OTA macromodel [4] were used in simulation. With a dc supply ± 10 V, the results obtained are shown in Figure 2. It appears from Figure 2 that the agreement between simulated and theoretical results is good.

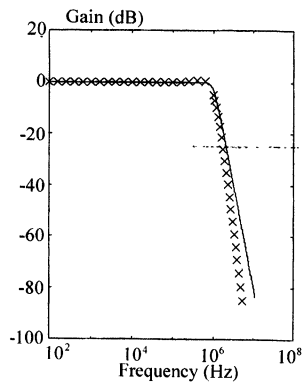

FIGURE 2 Simulated (—) and calculated (×) results obtained from the 4th-order lowpass response of (7).

CONCLUSION

A new Nth-order current-driven filter has been presented. The proposed filter uses only operational amplifiers and operational transconductance amplifiers. No external passive elements are used. The proposed circuit enjoys the following advantages:

(a) Independent current control of the filter parameters.
(b) Simultaneous support of $n+1$ different high-impedance output-current responses and n different low-impedance output-voltage responses.
(c) Insensitivity to the temperature variations of the transconductances of the OTAs. Moreover, using operational amplifiers with temperature compensated gain-bandwidth products [5], high-order responses with temperature-insensitive parameters can be realised.

References

[1] Tsukutani, T., Ishida, M., Tsuiki, S. and Fukui, Y. (1996). Current-mode biquad without external passive elements, *Electronics Letters*, **32**, 197–198.
[2] Abuelma'atti, M. T. and Alzaher, H. A. (1997). Universal three input and one output current-mode filter without external passive elements, *Electronics Letters*, **33**, 281–283.
[3] Chen, W.-K., *Passive and Active Filters*, John Wiley & Sons, N.Y., 1986.
[4] Wu, J. (1994). Current-mode high-order OTA-C filters, *International Journal of Electronics*, **76**, 1115–1120.
[5] Acar, C. and Ghausi, M. S. (1978). Design of high-order active filters in integrated circuits, *IEEE Journal of Solid-State Circuits*, **SC-13**, 273–276.