Hindawi
Complexity
Volume 2018, Article ID 4102968, 14 pages
https://doi.org/10.1155/2018/4102968

Research Article

Healthcare Operation Improvement Based on Simulation of Cooperative Resource Preservation Nets for None-Consumable Resources

Soraia Oueida,[1] Yehia Kotb,[2] Seifedine Kadry,[3] and Sorin Ionescu[1]

[1] *Industrial Engineering Department, Politehnica University of Bucharest, Romania*
[2] *Computer Engineering Department, American University of the Middle East, Kuwait*
[3] *Department of Mathematics and Computer Science, Faculty of Sciences, Beirut Arab University, Lebanon*

Correspondence should be addressed to Seifedine Kadry; s.kadry@bau.edu.lb

Received 13 June 2018; Revised 8 September 2018; Accepted 16 September 2018; Published 19 November 2018

Academic Editor: Diego R. Amancio

Copyright © 2018 Soraia Oueida et al. This is an open access article distributed under the Creative Commons Attribution License, which permits unrestricted use, distribution, and reproduction in any medium, provided the original work is properly cited.

Healthcare systems are growing very fast, especially emergency departments (EDs) which constitute the major bottleneck of these complex concurrent systems. Emergency departments, where patients arrive without any prior notice, are considered real-time complex dynamic systems. Enhancing these systems requires tailored modeling techniques and a process optimization approach. A new mathematical approach is proposed in order to help multiple emergency units cooperate and share none-consumable resources to achieve the required flow. To achieve the cooperation, the process is modeled by a new subclass of Petri nets. The new Petri net model was proposed in a previous work and is used in this study in order to tackle the problem of modeling and managing these emergency units. The proposed Petri net is named Resource Preservation Net (RPN). Few theorems and lemmas are proposed to support the proposed Petri net model and to prove the correctness of cooperation and resource sharing. In this contribution, a model of cooperative healthcare units is proposed to achieve sound resource sharing and collaboration. The objective function of the proposed model is to improve the key performance indicators: patients length of stay (LoS), resource utilization rates, and patients waiting time. The cooperation among multiple EDs is then proposed through the study of merging two or more units. The cooperative and noncooperative behavior are also studied through theorems of soundness, separability and serializability, and a proof of scalability.

1. Introduction

Complexity, concurrency, and unpredictability of events in majority of industrial systems impose on decision makers the need to study the system and analyze the processes to always find room for improvements. Industrial systems usually face a main problem: resources shortage [1]. Effective allocation of resources is a must to maintain a dynamic controlled flow of operations [2]. In this study, a new model is proposed in order to effectively control the workflow processes and maintain synchronization among activities [3]. Tasks and dependencies are modeled in Petri net by transitions, and places/arcs, respectively [4]. Using Petri net modeling with healthcare helps to control and overcome the problem of complexity. Here, two main characteristics of Petri net workflows can be highlighted: Safety and Soundness. Ensuring the soundness of the model will definitely ensure the liveness, reachability, and efficiency of the model proposed. Moreover, model soundness guarantees a system with critical sections free and ensures framework serializability and separability. Critical sections are referred to as some tasks impossible to be executed by more than one activity at a time. A framework that handles critical sections was suggested by Baldwin *et al.* [5].

The healthcare system under study in this paper is the emergency department (ED) [6] of a general hospital located in Lebanon. The hospital is recognized since 1952. The hospital's ED consists of two emergency rooms, named in this

study ER A and ER B, connected through an underground tunnel. The ED serves more than 40,000 patients annually and is open for 24/7. The main performance measures relied on during this study are patient length of stay (LoS) and queues waiting time. These metrics are considered the main problems tackling emergency departments nowadays [7]. High waiting times may lead to overcrowding and thus affects the daily operations of the ED and may result in patient dissatisfaction [3]. A possible solution to these problems is increasing the resource capacity. Nevertheless, adding extra resources is not always possible due to budget constraints and management limitation in providing extra facilities [8]. Problems facing ED systems have been the main subject in literature when it comes to healthcare management. Improving ED processes is the key to patient satisfaction always taking into consideration the cost/revenue [9]. Computer simulation was proven to be the best way to present effectively the flow in a real-time system without any interruption of the daily operations. The power of Petri net is about the fact that it merges the mathematical modeling and the simulation of processes, which means that the system can be analyzed and enhancement can be suggested [5]. To alleviate the overcrowding problem and prevent bottleneck, waiting times and patient LoS should be reduced. Also, a better resource allocation of available resources may reduce waste and undesirable cost [10]. In this study, several processes of the chosen ED are simulated such as registration, triage, examination, radiology, and billing, in order to suggest improvement scenarios. This study is organized as follows: An introduction is presented in Section 1. Petri net and application to healthcare are discussed in Section 2. In Section 3, a new Petri net framework is proposed. In Section 4, the new system is validated through a mathematical model. Framework scalability is presented in Section 5. In Section 6, framework separability and serializability are presented. An application of the new framework to healthcare is illustrated in Section 7. Simulation results are discussed in Section 8. Finally, conclusion and future work are presented in Section 9.

2. Literature Review on Petri Nets

Petri net is a mathematical modeling language used to describe the concurrent behavior as well as the functional structure of systems. Being flexible and simple to use, Petri net is proven to be very efficient when modeling and analyzing discrete complex systems such as healthcare. With Petri nets, the dynamic behavior of each process can be illustrated and visualized without interrupting the real-life system. Events' dependencies can be evaluated and easily modeled. A framework designed using Petri nets can be easily verified and validated based on the main characteristics: boundedness, reproducibility, liveness, reachability or nonreachability, invariants, and deadlocks. Systems and processes are described using places and transitions. Places are represented in the model with circles. Transitions are represented in the model with rectangles. A transition can be connected to one or more places and one place can be connected to one or more transitions. Arcs are used to connect different nodes. In this paper, tokens resemble the resources and patients in medical emergency units and are represented in the model by solid circles residing inside the places. A transition, t, can be enabled if and only if no empty places are connected to this transition as inputs; we say that the transition is fired. After being fired, new tokens are generated in each of the output places and all tokens are removed from each of the input places.

Business processes can be enhanced using simulation, where the real system continues its normal flow of operation without any real interruption in its activities. The system is redesigned and represented by a model to describe all its processes. Emergency departments being complex and concurrent systems rely on simulation in order to improve its operation. Accordingly, Petri nets were proven to be one of the efficient approaches used in order to optimize this type of systems [11]. Jansen and Reijers [12] used colored Petri nets in order to model a mental healthcare institute. Service time and flow time were reduced as part of system improvement. As per the literature, overcrowding of emergency departments is the major problem facing healthcare systems which imposes the need to optimize its flow of work and resource capacity levels. Another ED in Italy was modeled by Dotoli *et al.* [13] where a PN workflow model was designed in order to improve the structure and dynamics of the system [14]. The authors approached a management technique for optimizing patient flow and proposing new resource dimensions. Mahulea *et al.* [15] proved in their work the efficiency of Petri net workflows in modeling and analyzing healthcare systems [16]. In their study, they suggested a new methodology using Petri nets for resource allocation where different resources are assigned based on the type of the activity required. Another study addressing healthcare problems using Petri nets was proposed by Augusto and Xie [17]. Early patients discharge and introducing home care option was suggested by Fanti *et al.* [18] as another alternative procedure for overcoming the problem of ED overcrowding. Darabi et al. presented a study on resource modeling for a hospital in Chicago. The resources consist of human and nonhuman resources and the study is based on Petri [19] net concepts where these resources are modeled and simulated can be performed [20]. Another research was approached by Chen et al., using Petri net in order to support resource assignment in project management [21]. Several previous studies were performed using Petri net modeling and simulation in order to study system flow and control resource allocation ([22–27]).

3. New Proposed Petri Net Framework

In a previous work, a new type of Petri net model is proposed [28]. This new model is useful for systems with nonconsumable resources and named Resource Preservation Net (RPN for short). Resources flowing into the system are preserved. Resources are referred to the human resources providing care to arriving patients. Resources return to their corresponding pools when a task is accomplished. This RPN can be applied to any queuing system such as healthcare, restaurants, banks, etc. Some previous works also used

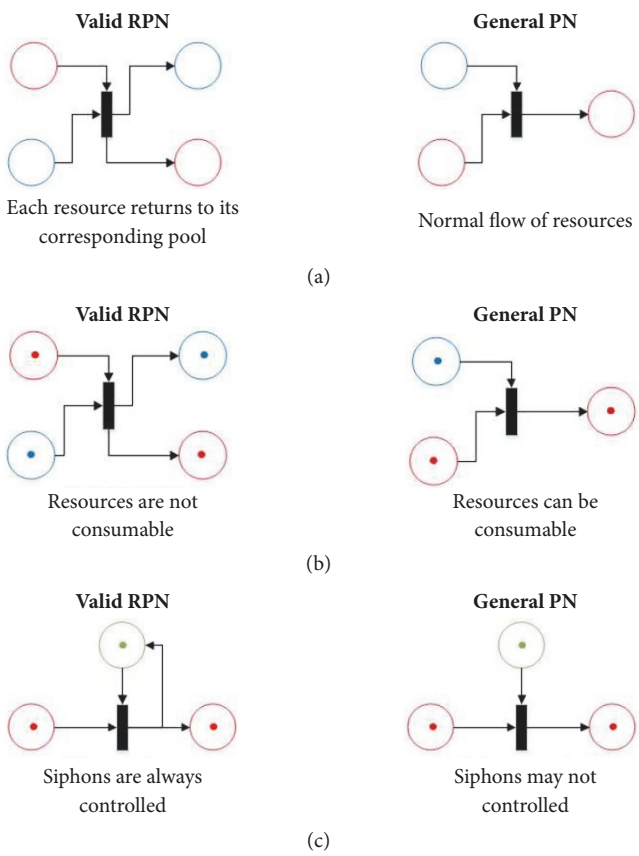

Figure 1: A comparison between RPN architecture (*left hand side*) and regular Petri net (*right hand side*).

extended Petri nets and subclasses of Petri nets in order to model project management with resource sharing ([21, 29–31]). All these nets are capable of modeling resource sharing but do not tackle the problems stated here in the RPN. In this RPN, each resource returns to its pool after serving a certain activity, resources are not consumable and siphons are guaranteed to be always controlled. Moreover, this RPN is a project of an under process prototype platform that will allow the simulation of any complex industrial system such an emergency department and tackle the problems arising by performing optimization and providing all parties satisfaction. In Section 4, a mathematical model is suggested and presented in order to validate and better describe these systems. RPN is a subclass version of the general PN existing in the literature with some changes that depict the resource aware structure. This proposed RPN is applied to a real-life problem in Section 7 in order to model and optimize an ED in Lebanon. A comparison between the general Petri net (PN) and the proposed valid RPN is presented in Figures 1(a), 1(b), and 1(c).

In Figure 1(a), as seen in the RPN *(left hand side)*, for every place type in the set of input places of a certain transition, that type has to exist as an output place. The number of input places and output places does not have to be the same, it is the existence of place types that has to match one to one between input set and output set. Figure 1(a), the general PN *(right hand side),* does not have such constraint which means that certain types might be suppressed during transition execution. Figure 1(b) shows the property of resource preservation. In the left hand side, the RPN preserves the resource; in other words, the number of input tokens is equal to the number of output tokens, whereas in the right hand side, tokens could be consumed as a general PN. In Figure 1(c), the left hand side shows the RPN with the property of controlling siphons which is a basic property that has to be satisfied in any RPN. The right hand side of Figure 1(c) shows a general PN where siphons do not have to be controlled.

4. Mathematical Model and System Validation

The proposed Petri net model, RPN, is validated using discrete mathematics. The validation is performed through proposing a theorem of soundness and few lemmas. The model is validated for noncooperative systems [32] where only one unit is included in a certain organization.

4.1. Model Definition. An RPN is a uncouple that is defined as

$$RPN = \left\langle \mathbb{P}_p, \mathbb{P}, \mathbb{T}, \mathbb{R}, \lambda, \Lambda, \mathbb{F}, i, o, \mathbb{M}, \Theta\left(\mathbb{P}_p, \mathbb{R}\right)\right\rangle \quad (1)$$

where

(i) $\mathbb{P}_p$ is the pool of preserved resources;

(ii) $\mathbb{P}$ is the set of places;

(iii) $\mathbb{T}$ is the set of transitions;

(iv) λ is the set of request for service;

(v) Λ is the set of capabilities;

(vi) $\Theta(\mathbb{P}_p, \mathbb{R})$ is the mapping function that assigns resources to pools;

(vii) $\mathbb{R}$ is the set of resources;

(viii) $\mathbb{F} = \mathbb{P}_p \times \mathbb{T} \cup \mathbb{T} \times \mathbb{P}_p \cup \mathbb{P} \times \mathbb{T} \cup \mathbb{T} \times \mathbb{P}$ which is the topology of the workflow. Note that the places here are classified into regular places and pools. Pools are places that have the initial marking of resources and all pools are controlled siphons. Siphons are places that, if not properly controlled, once they loose their markings they might not be marked again;

(ix) $\mathbb{M}$ is the marking of the RPN;

(x) i is the input place of the RPN;

(xi) o is the output place of the RPN.

A transition can be fired only if the required number of tokens at the input place is met. Different types of resources are defined in the system, each responsible for a certain task in order to accomplish the activity. A Petri net is RPN if and only if the two conditions below are met:

(1) $\forall \Theta(\mathbb{P}_j) \| \mathbb{P}_j \in \bullet\mathbb{T}_s$, $\exists \mathbb{P}_k \| \mathbb{P}_k \in \mathbb{T}_s\bullet$ and $\Theta(\mathbb{P}_j) = \Theta(\mathbb{P}_k)$. In other words, the first condition implies that, for every type of place such that this place is the

input to a transition $\mathbb{T}$, another place exists which is the output to this transition and where each type of places at the input is equal to the corresponding type of places at the output. This is because the resources should always return to their pools once the activity is accomplished, where $\mathbb{T}_s$ is any transition belonging to the set of transitions $\mathbb{T}$.

(2) $\forall \mathbb{P}_j \in \bullet\mathbb{T}_s$, $\sum_{k=1}^{n}(a_k) \in \mathbb{P}_j$ where a_k represents the token in a place. In other words, for every place that belongs to the input of a transition $\mathbb{T}$, the sum of tokens a that are in this particular place and required to fire this transition will be equal to the sum of tokens that are generated in the output place of this transition after $\mathbb{T}$ is fired.

$0 \leq j \leq \|\mathbb{P}\|$ and $0 \leq s \leq \|\mathbb{T}\|$.
Then, after $\mathbb{T}$ is fired,

$$\sum_{k=1}^{n}(a_k) = \sum_{j=1}^{m}(a_j) \parallel a_j \in \mathbb{T}\bullet \text{ and } a_k \in \bullet\mathbb{T} \tag{2}$$

This means that the tokens are not consumable and at the end of the model all the input tokens will exit the system.

4.2. RPN as a None-Cooperative System. In this section a theorem is proposed in order to proof that the RPN is sound and is called the theorem of soundness. This RPN consists of one unit and is proved for now to be sound operating separately from any other unit in the system or vice versa. For a workflow to be sound, all input tokens to this workflow will eventually reach the output. In other words, there exist a minimum number of transitions that are live to guarantee that all tokens will reach the output. Therefore, the output is reachable from the input. Van der Aalst et al. provided in 2010 an overview of the different notions of soundness [33]. The proof will be done in both ways and will be presented as part (a), the result of assuming that RPN is sound, and part (b), proving that RPN is sound assuming a certain flow of costumers in the model.

Theorem 1. *RPN is sound if and only if*

(1) $\forall \mathbb{P}_p \times \mathbb{T} \neq \emptyset$, $\exists \mathbb{T} \times \mathbb{P}_p \neq \emptyset$, $\exists i \in \mathbb{P} \| \bullet i = \emptyset$, $\exists o \in \mathbb{P} \| o\bullet = \emptyset, \mathbb{M}(i)_{\tau 1} \equiv \mathbb{M}(o)_{\tau 2}$, *where* $\tau_2 \geq \tau_1$

(2) $\sum_{j=1}^{n}(\mathbb{M}(\mathbb{P}_j)) \| \mathbb{P}_j \equiv \bullet\mathbb{T}_s = \sum_{k=1}^{m}(\mathbb{M}(\mathbb{P}_k)) \| \mathbb{P}_k \equiv \mathbb{T}_s\bullet$

(3) $\forall \mathbb{P}_j$, $\mathbb{P}_j \in \mathbb{P}_p$, $\exists \tau, \mathbb{T}_\tau \parallel \mathbb{M}_\tau(\mathbb{P}_j) = \mathbb{M}_0(\mathbb{P}_j)$ *and* $\mathbb{P}_j \in \mathbb{T}_\tau\bullet$ *and* $\bullet\mathbb{T}_\tau \in \mathbb{P}_j$

(4) $\Lambda \subseteq \mathbb{T}$

where

(i) $\mathbb{P}_j \in \{\mathbb{P}\}$;

(ii) $\mathbb{M}(\mathbb{P}_j)$ *is the marking of a certain place* $\mathbb{P}$ *with index j;*

(iii) $\bullet i$ *is the set of input transitions to place i;*

(iv) $o\bullet$ *is the set of output transitions from place o;*

(v) *n is the total number of input tokens to a transition;*

(vi) *m is the total number of output tokens to a transition;*

(vii) $\mathbb{T}_j \in \{\mathbb{T}\}$;

(viii) $\tau \geq 0$;

(ix) $\mathbb{M}_\tau(\mathbb{P}_j)$ *is the marking of a certain place at time* τ;

(x) $\mathbb{M}_0(\mathbb{P}_j)$ *is the marking of a certain place at initial time.*

It is worth noting that pools are considered as siphons and therefore they have to be properly controlled. In other words, the marking of pools at the input transition should be equal to the marking of pools at the output transition. Resources should return to their pools after accomplishing a service. Moreover, customers entering the system should leave the system after receiving the required service. When a customer requests a service from the set of requests, λ, the resource responsible to accomplish this task should be able and have the capabilities to serve this customer. These capabilities are referred to as a set Λ.

RPN is assumed to be sound if and only if the 4 set of equations from Theorem 1 are met. The first equation identifies the correct topology of the RPN. Transitions that are consuming tokens from resource pools have to end up producing the same tokens into same pools. This is the way we ensure that siphons are controlled. RPN is sound if for every existing connection between the place $\mathbb{P}_p$ and a transition $\mathbb{T}$; there exist another connection between that specific $\mathbb{T}$ and that same place, where $\mathbb{P}_p$ is the set of pools. Therefore, $\forall \mathbb{P}_p \times \mathbb{T} \neq \emptyset$, $\exists \mathbb{T} \times \mathbb{P}_p \neq \emptyset$. Also, the first place in the workflow noted by the input i and the last place noted by the output o have no connected places where $\bullet i$ means a transition connected to the input of i and $o\bullet$ means a transition connected to the output of o. Therefore, $\exists i \in \mathbb{P} \parallel \bullet i = \emptyset$ and $\exists o \in \mathbb{P} \parallel o\bullet = \emptyset$. Since the RPN is sound, then the marking of the inputs should be equal to the marking of the output in order to ensure a stable flow of customers in the system, where the marking is the number of needed tokens in order to fire a certain transition $\mathbb{T}$ that will be then executed. This means that each customer entering the system has to leave it after a certain period of time when all the needed care is attained. Therefore, $\mathbb{M}(i) \equiv \mathbb{M}(o)$.

In the second condition of the theorem, the total sum of markings of a certain place $\mathbb{P}_j$ should be equal to the total sum of markings of another place $\mathbb{P}_k$, where $\mathbb{P}_j$ is the input place of a certain transition $\mathbb{T}_s$ and $\mathbb{P}_k$ is the output place to this transition in order to ensure the soundness of the workflow RPN. This states that the preserved resources denoted by $\mathbb{P}_j$, $\mathbb{P}_k$ are not consumable and should return to their corresponding pools once the transition is executed. Therefore,

$$\sum_{j=1}^{n}\mathbb{M}(\mathbb{P}_j) \Big\| \mathbb{P}_j \equiv \bullet\mathbb{T}_s = \sum_{k=1}^{m}\mathbb{M}(\mathbb{P}_k) \Big\| \mathbb{P}_k \equiv \mathbb{T}_s\bullet \tag{3}$$

RPN is guaranteed to be sound if siphons are controlled as per the third condition of the theorem, where siphons are a set of places $\mathbb{P}$ such that any token taken out from the siphon must return back to that siphon. So, if siphons are not properly controlled, they might lose their marking and therefore affect the soundness of the system [34]. So for every place $\mathbb{P}_j$ that belongs to the pool of resources $\mathbb{P}_p$, a time τ

exists where these resources return to their corresponding pools, which means that the marking of this $\mathbb{P}_j$ at that time τ is equal to the initial marking of that place $\mathbb{P}_j$. It is worth noting here that a resource can move along with the customers through many consecutive transitions, if needed, in order to accomplish a certain task and then go back to its pool when all the needed care is already given. Therefore, $\forall \mathbb{P}_j,\ \mathbb{P}_j \in \mathbb{P}_p,\ \exists \tau, \mathbb{T}_\tau \parallel \mathbb{M}_\tau(\mathbb{P}_j) = \mathbb{M}_0(\mathbb{P}_j)$ and $\mathbb{P}_j \in \mathbb{T}_\tau\bullet$ and $\bullet\mathbb{T}_\tau \in \mathbb{P}_j$.

Finally, condition 4 guarantees that each resource serving a particular customer in order to execute a certain transition should have the capability to handle and serve this customer; otherwise that customer will be lost in the system and will not follow a certain flow in order to reach the output, where the set of capabilities needed Λ should belong to that transition $\mathbb{T}$ that is being executed. Therefore, $\Lambda \subseteq \mathbb{T}$.

To conclude, Theorem 1 guarantees that, for a sound RPN,

(1) the system is structurally valid;

(2) resources are not consumable;

(3) siphons are controlled;

(4) resources have the capability to serve customers.

Proof (proof of Theorem 1: Part A). Since RPN is sound, then

(1) $o \in [i\rangle$, therefore,

(2) $\forall \mathbb{T}_j \in \mathbb{T},\ \mathbb{T}_j \in [i\rangle$, therefore,

(3) $\exists \mathbb{P}_p \times \mathbb{T} \neq \emptyset$ and $\mathbb{M}(\mathbb{P}_p)_{t1} = \mathbb{M}(\mathbb{P}_p)_{t2}$ where $t_2 \geq t_1$, therefore,

(4) since $\exists \mathbb{P}_p \times \mathbb{T} \neq \emptyset$ then, $\exists \mathbb{T} \times \mathbb{P}_p \neq \emptyset$, therefore,

(5) $\forall \mathbb{M}_t \in [\mathbb{M}(i)\rangle$, where $t > 0$, therefore,

(6) $\exists \tau \parallel \mathbb{M}_\tau = \mathbb{M}(o)$ for $t > \tau$, where τ is the time taken from input to output, therefore,

(7) $\forall \mathbb{M} \in \mathbb{M}(i), \mathbb{M} \in \mathbb{M}(o)$, then $\mathbb{M}(o) = \mathbb{M}(i)$ where

(i) $\mathbb{M}(i) = \mathbb{M} - \mathbb{M}(\mathbb{P}_p)$

(ii) $\mathbb{M}(i)$ is the input marking of the workflow (customer)

(iii) $\mathbb{M}(\mathbb{P}_p)$ is the marking of the pools (resources). These pools are siphons

(iv) $\mathbb{M}(o)$ is the output marking

(v) $\mathbb{M}$ is the total marking

Since RPN is a sound workflow therefore by the definition of the workflow,

(8) $\exists i \in \mathbb{P} \parallel \bullet i = \emptyset$ and $\exists o \in \mathbb{P} \parallel o\bullet = \emptyset$

Since $\mathbb{M}(o) = \mathbb{M}(i)$, therefore,

(9) $\forall \mathbb{T} \in \mathbb{M}_{\tau-1}(\bullet\mathbb{T}) = \mathbb{M}_\tau(\mathbb{T}\bullet)$, where transition $\mathbb{T}$ fires out on time τ and $\bullet\mathbb{T} = \mathbb{T}\bullet = \mathbb{P}_p$, therefore,

(10) $\sum_{j=1}^{n}(\mathbb{P}_j)\|\mathbb{P}_j = \bullet\mathbb{T} \equiv \sum_{k=1}^{m}(\mathbb{P}_k)\|\mathbb{P}_k = \mathbb{T}\bullet$, therefore,

(11) $\forall \mathbb{P}_j,\ \mathbb{P}_j \in \mathbb{P}_p,\ \exists \tau, \mathbb{T}_j \parallel \mathbb{M}_\tau(\mathbb{P}_j) = \mathbb{M}_o$ and $\mathbb{P}_j \in \mathbb{T}_\tau\bullet$ and $\bullet\mathbb{T}_\tau \in \mathbb{P}_j$,

(12) Since RPN is sound and since $\forall \mathbb{M}(o) \in [\mathbb{M}(i)\rangle$, therefore,

(13) $\forall \lambda \in \Lambda,\ \exists \mathbb{T}_j \in \mathbb{T} \parallel \mathbb{T}_j \equiv \lambda,\ \Lambda \subseteq \mathbb{T}$

In other words, since RPN is assumed to be sound then, the output is reachable from the input ($o \in [i\rangle$) and therefore for every transition $\mathbb{T}_j$ that belongs to the set of transitions $\mathbb{T}$, this specific transition $\mathbb{T}_j$ belongs also to the reachability of the input i ($\forall \mathbb{T}_j \in \mathbb{T},\ \mathbb{T}_j \in [i\rangle$) and thus a connection between a specific place $\mathbb{P}_p$ and a transition $\mathbb{T}$ exists and the marking of this place at a time t_1 is equal to the marking of this place at a time t_2 ($\exists \mathbb{P}_p \times \mathbb{T} \neq \emptyset$ and $\mathbb{M}(\mathbb{P}_p)_{t1} = \mathbb{M}(\mathbb{P}_p)_{t2}$), where t_1 and t_2 are two different times during the flow of customers in the system. Then, also a connection from this transition $\mathbb{T}$ to the place $\mathbb{P}_p$ exists ($\exists \mathbb{P}_p \times \mathbb{T} \neq \emptyset$ then, $\exists \mathbb{T} \times \mathbb{P}_p \neq \emptyset$). This describes the topology of the net, specifically, the connections between siphons ($\mathbb{P}_p$), and the set of transitions ($\mathbb{T}$). We can then say that, for every marking at time t that belongs to the reachability marking of the input i ($\forall \mathbb{M}_t \in [\mathbb{M}(i)\rangle$), the marking at time t is equal to the marking of the output, where τ is the total time from input to output ($\exists \tau \parallel \mathbb{M}_\tau = \mathbb{M}(o)$). Therefore, the marking of arriving customers $\mathbb{M}(i)$ is equal to the marking of the output $\mathbb{M}(o)$ since the customer is reaching the output ($\forall \mathbb{M} \in \mathbb{M}(i), \mathbb{M} \in \mathbb{M}(o)$, then $\mathbb{M}(o) = \mathbb{M}(i)$). This means that the RPN is structurally stable. □

$\exists i \in \mathbb{P} \parallel \bullet i = \emptyset$ and $\exists o \in \mathbb{P} \parallel o\bullet = \emptyset$): this equation describes the behavior of the input and output places of a sound workflow. This means that for any workflow, the input place is not preceded by any node and the output place is not followed by any node ($\forall \mathbb{T} \in \mathbb{M}_{\tau-1}(\bullet\mathbb{T}) = \mathbb{M}_\tau(\mathbb{T}\bullet)$): this equation states that the marking of the input of a transition $\mathbb{T}$ at a time $\tau - 1$ is equal to the marking of the output of the transition $\mathbb{T}$ at a time τ after this transition is being executed. Here, we are controlling the siphons; that means every resource that is entering a transition to fire it and execute it should also leave this transition after a certain time. Therefore, the resources are not consumable and should return to their corresponding pools where the total sum of marking of a specific place $\mathbb{P}_j$ belonging to this pool and connected to the input of the transition $\mathbb{T}$ is equal to the total marking of place $\mathbb{P}_k$ that is connected to the output of the transition $\mathbb{T}$. Here we can reach the conclusion that for every $\mathbb{P}_j$ belonging to the pool of resources $\mathbb{P}_p$, the marking of place $\mathbb{P}_j$ at a certain time τ is equal to the output marking of $\mathbb{P}_j$, where $\mathbb{P}_j$ is connected to the input of the transition $\mathbb{T}_j$ at time τ and also connected to the output of the transition $\mathbb{T}_\tau$ at time τ ($\forall \mathbb{P}_j,\ \mathbb{P}_j \in \mathbb{P}_p,\ \exists \tau, \mathbb{T}_j \parallel \mathbb{M}_\tau(\mathbb{P}_j) = \mathbb{M}_o$ and $\mathbb{P}_j \in \mathbb{T}_\tau\bullet$ and $\bullet\mathbb{T}_\tau \in \mathbb{P}_j$). Therefore, siphons are being controlled.

Since RPN is sound and all customers entering the system reach the output and leave the system ($\forall \mathbb{M}(o) \in [\mathbb{M}(i)\rangle$); therefore, for every set of requests λ that belongs to a pool of capabilities, a transition $\mathbb{T}_j$ exists that belongs to the set of transitions to be executed to accomplish a certain flow of the customer in the system, such that this $\mathbb{T}_j$ is equal to λ since the transition to be executed needs a resource that has the required capabilities. Therefore, the set of capabilities Λ belongs to the set of transitions; otherwise the customer

cannot flow to the output and reach the end of the workflow net ($\forall\lambda \in \Lambda,\ \exists\mathbb{T}_j \in \mathbb{T} \parallel \mathbb{T}_j \equiv \lambda,\ \Lambda \subseteq \mathbb{T}$).

Proof (proof of Theorem 1: Part B).

(1) If $\exists\mathbb{P}_p \times \mathbb{T} \neq \emptyset,\ \exists\mathbb{T} \times \mathbb{P}_p \neq \emptyset$ and $\exists i \in \mathbb{P} \parallel \bullet i = \emptyset,\ \exists o \in \mathbb{P} \parallel o\bullet = \emptyset$, and $\mathbb{M}(i) \equiv \mathbb{M}(o)$ therefore,

(2) $\forall\mathbb{P}_j,\ \mathbb{P}_j \in \mathbb{P}_p,\ \exists\tau \parallel \mathbb{M}_\tau(\mathbb{P}_j) = \mathbb{M}_0(\mathbb{P}_j)$ and $\mathbb{P}_j \in [\mathbb{T}_\tau\rangle$ and $\mathbb{T}_\tau \in [\mathbb{P}_j\rangle$

Since $\forall\mathbb{P}_j,\ \mathbb{P}_j \in \mathbb{P}_p,\ \exists\tau, \mathbb{T} \parallel \mathbb{M}_\tau(\mathbb{P}_j) = \mathbb{M}_0(\mathbb{P}_j)$ and $\mathbb{P}_j \in [\mathbb{T}_\tau\rangle$ and $\mathbb{T}_\tau \in [\mathbb{P}_j\rangle$, therefore,

(3) $\sum_{j=1}^{n}(\mathbb{M}(\mathbb{P}_j))\|\mathbb{P}_j \equiv \bullet\mathbb{T} = \sum_{k=1}^{m}(\mathbb{M}(\mathbb{P}_k))\|\mathbb{P}_k \equiv \mathbb{T}\bullet$

Since $\sum_{j=1}^{n}(\mathbb{M}(\mathbb{P}_j))\|\mathbb{P}_j \equiv \bullet\mathbb{T} = \sum_{k=1}^{m}(\mathbb{M}(\mathbb{P}_k))\|\mathbb{P}_k \equiv \mathbb{T}\bullet$ and $\forall\mathbb{P}_j,\ \mathbb{P}_j \in \mathbb{P}_p,\ \exists\tau, \mathbb{T} \parallel \mathbb{M}_\tau(\mathbb{P}_j) = \mathbb{M}_o(\mathbb{P}_j)$ and $\mathbb{P}_j \in [\mathbb{T}_\tau\rangle$ and $\mathbb{T}_\tau \in [\mathbb{P}_j\rangle$, therefore,

(4) $\forall a \parallel a \in \mathbb{M}_0(i), a \in \mathbb{M}_t(o)$

where $t \geq 0$ and $\mathbb{M}_0(i)$ is the marking of the input at time 0 and $\mathbb{M}_t(o)$ is the marking of the output at time t. Therefore, RPN is sound. □

In other words, the RPN is proven to be sound if the 4 characteristics of Theorem 1 are satisfied. If the workflow is structurally valid, which means there exist a connection between the set of places $\mathbb{P}_p$ and the set of transition $\mathbb{T}$ and no nodes are preceding the input of the workflow and no nodes are following the output, plus the marking of the input is equal to the marking of the output ($\exists\mathbb{P}_p \times \mathbb{T} \neq \emptyset,\ \exists\mathbb{T} \times \mathbb{P}_p \neq \emptyset$ and $\exists i \in \mathbb{P} \parallel \bullet i = \emptyset,\ \exists o \in \mathbb{P} \parallel o\bullet = \emptyset$, and $\mathbb{M}(i) \equiv \mathbb{M}(o)$); therefore, for every place $\mathbb{P}_j$ that belongs to the set of places $\mathbb{P}_p$, there exist a transition $\mathbb{T}$ at a time τ where the marking of the place $\mathbb{P}_j$ at time τ is equal to the initial marking of $\mathbb{P}_j$ and $\mathbb{P}_j$ belongs to the reachability of $\mathbb{T}$ and $\mathbb{T}$ belongs to the reachability of $\mathbb{P}_j$ at time τ ($\forall\mathbb{P}_j,\ \mathbb{P}_j \in \mathbb{P}_p,\ \exists\tau \parallel \mathbb{M}_\tau(\mathbb{P}_j) = \mathbb{M}_0(\mathbb{P}_j)$ and $\mathbb{P}_j \in [\mathbb{T}_\tau\rangle$ and $\mathbb{T}_\tau \in [\mathbb{P}_j\rangle$); this means the workflow resources which belong to the set of places $\mathbb{P}_p$ are not consumable and they return to their corresponding pools after serving a certain transition $\mathbb{T}$ ($\sum_{j=1}^{n}(\mathbb{M}(\mathbb{P}_j))\|\mathbb{P}_j \equiv \bullet\mathbb{T} = \sum_{k=1}^{m}(\mathbb{M}(\mathbb{P}_k))\|\mathbb{P}_k \equiv \mathbb{T}\bullet$). Since the resources return to their corresponding pools, this means siphons are controllable, where for every token a, such that a belongs to the initial marking of the input, a belongs as well to the marking of the output at a time t, where t is the time taken for the customer to move from input to output ($\forall a \parallel a \in \mathbb{M}_0(i),\ a \in \mathbb{M}_t(o)$). Combining all these characteristics will ensure that tokens will eventually reach the output and therefore RPN is sound.

To conclude Theorem 1, four lemmas are proposed below and they are based on previous proofs of the theorem.

Lemma 2 (for Theorem 1). *For every RPN such that RPN is sound, this RPN is structurally valid.*

Proof (proof of Lemma 2). $\forall$ RPN $\parallel$ RPN is sound, $\exists\mathbb{P}_p \times \mathbb{T} \neq \emptyset$ and $\exists\mathbb{T} \times \mathbb{P}_p \neq \emptyset \parallel \mathbb{P}_p, \mathbb{T} \in \{\text{RPN}\}$ and $\exists i \in \mathbb{P} \parallel \bullet i = \emptyset$ and $\exists o \in \mathbb{P} \parallel o\bullet = \emptyset$, therefore, $\mathbb{M}(i) \equiv \mathbb{M}(o)$.

In this proof we start with mentioning the characteristics of the net. The first two equations $\exists\mathbb{P}_p \times \mathbb{T} \neq \emptyset$ and $\exists\mathbb{T} \times \mathbb{P}_p \neq \emptyset$ describe the topology of the net and how the siphons are connected to the transitions. The equations show that if a pool is an input to a set of transitions, this set of transitions will bring tokens back to the same pool. This way the siphon is controlled. For the equations, $\exists i \in \mathbb{P} \parallel \bullet i = \emptyset$ and $\exists o \in \mathbb{P} \parallel o\bullet = \emptyset$, they describe the basic feature of a workflow; that is, there is one place that is considered as an input and it is not preceded by any other node and there is one output place that is not followed by any other node. Therefore, the tokens that are injected to the input will eventually end up being in the output ($\mathbb{M}(i) \equiv \mathbb{M}(o)$). □

Lemma 3 (for Theorem 1). *For every* RPN *such that RPN is sound, the resources are not consumable and return to their corresponding pools. A resource can move with a customer into different consecutive stages, if needed, before returning to its pool.*

Proof (proof of Lemma 3). $\forall$RPN $\parallel$ RPN is sound, $\exists\mathbb{P}_j \equiv \bullet\mathbb{T}$ and $\exists\mathbb{P}_k \equiv \mathbb{T}\bullet \parallel \sum_{j=1}^{n}(\mathbb{M}(\mathbb{P}_j)) = \Sigma_{k=1}^{m}(\mathbb{M}(\mathbb{P}_k))$. Then, $\Sigma\mathbb{M}_0(\mathbb{P}) = \Sigma\mathbb{M}_\tau(\mathbb{P})$. Therefore, resources are not consumable.

The equation $\exists\mathbb{P}_j \equiv \bullet\mathbb{T}$ and $\exists\mathbb{P}_k \equiv \mathbb{T}\bullet$ shows again the topology of the net where siphons are reachable from the sequence of transitions that consume from those siphons. For any transition, the number of input tokens equals the number of output tokens ($\Sigma_{j=1}^{n}\mathbb{M}(\mathbb{P}_j) = \Sigma_{k=1}^{m}\mathbb{M}(\mathbb{P}_k)$). Therefore, the sum of all markings in the net will not change by time and therefore there is no consumable resources ($\Sigma(\mathbb{M}_0(\mathbb{P})) = \Sigma(\mathbb{M}_\tau(\mathbb{P}))$). □

Lemma 4 (for Theorem 1). *For every RPN such that RPN is sound, the siphons are controllable.*

Proof (proof of Lemma 4). $\forall$RPN $\parallel$ RPN is sound, $\mathbb{P}_j \in \mathbb{P}_p$, $\exists\tau, \mathbb{T} \parallel \mathbb{M}_0(\mathbb{P}_j) = \mathbb{M}_\tau(\mathbb{P}_j)$ and $\mathbb{P}_j \in [\mathbb{T}_\tau\bullet\rangle$ and $\bullet\mathbb{T}_\tau \in [\mathbb{P}_j\rangle$.

Since RPN is sound then the initial marking of a place $\mathbb{P}_j$ is equal to the marking of that place at a certain time τ after the resource has moved into the required stages in order to accomplish a required service ($\mathbb{M}_0(\mathbb{P}_j) = \mathbb{M}_\tau(\mathbb{P}_j)$). Therefore, the place $\mathbb{P}_j$ is reachable from the output of transition $\mathbb{T}$ and the transition $\mathbb{T}$ is reachable from that place $\mathbb{P}_j$ ($\mathbb{P}_j \in [\mathbb{T}_\tau\bullet\rangle$ and $\bullet\mathbb{T}_\tau \in [\mathbb{P}_j\rangle$). Then, all siphons are controllable. □

Lemma 5 (for Theorem 1). *For every RPN such that RPN is sound, the system's resources have the capability to serve a certain customer and to execute a certain transition.*

Proof (proof of Lemma 5). Having Λ to be the set of capabilities of resources, $\forall\lambda \in \Lambda,\ \exists\mathbb{T}_j \in \mathbb{T} \parallel \lambda \equiv \mathbb{T}_j$. Therefore, $\forall$RPN $\parallel$ RPN is sound, $\exists\Lambda \subseteq \mathbb{T} \parallel \mathbb{T} \in$ RPN.

In this proof, the equations describe the mapping between resource capabilities and transitions that belong to the workflow. In other words, for the transition to fire certain resource capabilities have to be available. □

4.3. RPN as a Cooperative System. The theorems suggested here are to prove the soundness of the system including the cooperation between the two RPN_A and RPN_B. RPN_A refers

to the RPN of UNIT A and RPN_B refers to the RPN of UNIT B. The main reason of cooperation between the two RPNs is the blockage at one UNIT and therefore the need for sharing resources. RPN_A can share resources (staff or customer) with RPN_B if needed and vice versa. This can result in guaranteeing a load balance between the two RPNs of an organization and covering RPN that is not able to accomplish a task. The theorem will be proved based on the suggestion that each RPN, separately, is already sound. The only limitation here is that the resources being shared, if any, should be capable of serving this task coverage needed. The cooperative system is defined as follows:

RPN_c = <Stages, Resources, Patients>

$$\mathrm{RPN}_c = \mathrm{RPN}_A \otimes \mathrm{RPN}_B \tag{4}$$

where the operator $\otimes$ is used to represent the cooperation framework. This operator joins two cooperative sound frameworks RPN_A and RPN_B leading to a collective framework as a result and which will be proven to be sound as well. The resources, being shared, are defined as the set of pools: $\mathbb{P}_p = \{\mathbb{P}_{p1}, \mathbb{P}_{p2}, \ldots, \mathbb{P}_{pn}\}$.

We have two cases here, either sharing only staff resources (see Theorem 6) or sharing staff resources and customers along with other units; such as radiology, billing, etc. (see Theorem 7).

The following theorems demonstrate the soundness of the cooperative framework. We assume that all resources are defined and initially, resources are not shared. Mathematically, $\mathrm{RPN}_A \cup \mathrm{RPN}_B \subseteq$ Resources and $\mathrm{RPN}_A \cap \mathrm{RPN}_B = \{\emptyset\}$.

We study the cooperation in two different cases, namely, loosely coupled and tightly coupled. Loosely coupled case is when we only share resources between different RPNs. On the other hand, tightly coupled case is when we share resources and customers can move among RPNs.

Theorem 6 is described by the following, where RPN_A and RPN_B share only resources.

Theorem 6. $\mathrm{RPN}_c = \mathrm{RPN}_A \otimes \mathrm{RPN}_B$ *is sound if*

(1) RPN_A *is a sound* RPN,

(2) RPN_B *is a sound* RPN,

(3) $\forall \mathbb{P}_{pj} \in \mathbb{P}_{pA}, \mathbb{P}_{pj} \in [\mathbb{P}_{pB}\rangle$ *and* $\forall \mathbb{P}_{pk} \in \mathbb{P}_{pB}, \mathbb{P}_{pk} \in [\mathbb{P}_{pA}\rangle$,

(4) $\forall \mathbb{P}_{pj} \in \mathbb{P}_{pA}, \mathbb{P}_{Pj} \in \bullet\mathbb{T}_B$ *and* $\mathbb{P}_{pj} \in [\mathbb{T}_B\bullet\rangle$,

(5) $\forall \mathbb{P}_{pk} \in \mathbb{P}_{pB}, \mathbb{P}_{pk} \in \bullet\mathbb{T}_A$ *and* $\mathbb{P}_{pk} \in [\mathbb{T}_A\rangle\bullet$,

(6) $\exists\tau$ *where* $\mathbb{M}_\tau(\mathbb{P}_{pA}) = \mathbb{M}_0(\mathbb{P}_{pA})$ *and* $\mathbb{M}_\tau(\mathbb{P}_{pB}) = \mathbb{M}_0(\mathbb{P}_{pB})$,

(7) $\exists\Lambda_A,\ \Lambda_A \in \mathbb{T}_A|\Lambda_A \subseteq \mathbb{T}_B$ *and* $\exists\Lambda_B,\ \Lambda_B \in \mathbb{T}_B|\Lambda_B \subseteq \mathbb{T}_A$.

Proof (proof of loosely coupled case). Since RPN_A is sound and RPN_B is sound as proved in Theorem 1, therefore, $\mathbb{M}_\tau(\mathbb{P}_{pA}) = \mathbb{M}_0(\mathbb{P}_{pA})$ and $\mathbb{M}_\tau(\mathbb{P}_{pB}) = \mathbb{M}_0(\mathbb{P}_{pB})$. Since $\forall \mathbb{P}_{pj} \in \mathbb{P}_{pA}, \mathbb{P}_{pj} \in [\mathbb{P}_{pB}\rangle$ and $\forall \mathbb{P}_{pk} \in \mathbb{P}_{pB}, \mathbb{P}_{pk} \in [\mathbb{P}_{pA}\rangle$, therefore $\mathbb{P}_{pj} \in \mathbb{P}_{pB}$ and $\mathbb{P}_{pk} \in \mathbb{P}_{pA}$. Since $\mathbb{T}_B \in [\mathbb{P}_{pA}\rangle$ and $\mathbb{T}_A \in [\mathbb{P}_{pB}\rangle$, therefore, $\mathbb{P}_{pj} \in [\mathbb{T}_A\rangle$ and $\mathbb{P}_{pk} \in [\mathbb{T}_B\rangle$. From Theorem 1, $\mathbb{P}_{pA} \in [\mathbb{T}_A\rangle$ and $\mathbb{P}_{pB} \in [\mathbb{T}_B\rangle$, therefore the cooperative framework is sound.

In other words, this theorem shows the life cycle of the resource from the minute it is sent to a different RPN until it goes back to its initial RPN. The resource leaves the pool to join transitions in a different RPN. Since the RPN in the destination is also sound, it will end up being assigned to its resource pools, which in turn will direct the token to its initial RPN that will put that resource into its initial pool. □

Theorem 7 is described by the following where RPN_A and RPN_B share resources and customers.

Theorem 7. $RPN_c = RPN_A \otimes RPN_B$ *is sound tightly coupled if:*

(1) $\exists RPN_A$ *and* $RPN_B|RPN_A$ *is sound and* RPN_B *is sound and* $RPN_A \otimes RPN_B$ *is sound and loosely coupled.*

(2) $\exists \mathbb{T}_A \times \mathbb{P}_B \cup \mathbb{P}_A \times \mathbb{T}_B | \forall a_A \in RPN_A,\ a_A \in [RPN_B\rangle$ *and* $\forall a_B \in RPN_B,\ a_B \in [RPN_A\rangle$.

Proof (proof of tightly coupled case).

(1) since $\exists \mathrm{RPN}_c = \mathrm{RPN}_A \otimes \mathrm{RPN}_B | \mathrm{RPN}_c$ is sound loosely coupled from Theorem 6. Therefore, all siphons are controlled.

(2) since $\exists \mathbb{T}_A \times \mathbb{P}_B \cup \mathbb{T}_B \times \mathbb{P}_A$ therefore, $a \in \mathbb{M}(\mathbb{P}_A \cup \mathbb{P}_B)$.

(3) since $\mathbb{P}_A \in [\mathbb{P}_B\rangle$ therefore, $a_A \in$ output of RPN_A and $a_B \in$ output of RPN_B therefore, RPN_c is a sound tightly coupled framework.

In other words, the framework is proven from Theorem 6 to be a sound loosely coupled framework. In this theorem we prove that it is also a sound tightly coupled framework, where for every patient a that will transfer from one ER to another, this patient will return back to the original department to finalize the process and exit the system. a_A refers to a patient that starts in RPN_A and a_B refers to a patient that starts in RPN_B. □

As a conclusion for Theorems 6 and 7, in the loosely coupled case, all pools are shared between the two RPNs. As for the tightly coupled case, all pools and patients are shared.

Lemma 8 (for Theorem 6). *For every cooperative system* RPN_c*, if this workflow is sound then, each contained workflow* RPN_A *and* RPN_B *are also sound.*

$\forall RPN_c = RPN_A \otimes RPN_B$*, if* RPN_c *is sound then* RPN_A *is sound and* RPN_B *is sound.*

Proof (proof of Lemma 8). If RPN_c is sound therefore,

(1) $\mathbb{M}_\tau(\mathrm{RPN}_c) \equiv \mathbb{M}_0(\mathrm{RPN}_c)$ therefore,

(2) $\forall \mathbb{P}_{pj} \in \mathbb{P}_{pA}$ and $\forall \mathbb{P}_{pk} \in \mathbb{P}_{pB}, \mathbb{P}_{pj} \in \bullet\mathbb{T}_B$ and $\mathbb{P}_{pj} \in \mathbb{T}_A\bullet$ and $\mathbb{P}_{pk} \in \bullet\mathbb{T}_A$ and $\mathbb{P}_{pk} \in \mathbb{T}_B\bullet$ therefore,

(3) $\sum_{i=1}^{n} \mathbb{M}_\tau(\mathrm{RPN}_A) \equiv \sum_{j=1}^{m} \mathbb{M}_0(\mathrm{RPN}_A)$ and $\sum_{i=1}^{n} \mathbb{M}_\tau(\mathrm{RPN}_B) \equiv \sum_{j=1}^{m} \mathbb{M}_0(\mathrm{RPN}_B)$

(4) $\mathbb{M}_0(i_A) = \mathbb{M}_\tau(o_A)$ and $\mathbb{M}_0(i_B) = \mathbb{M}_\tau(o_B)$ where $\mathbb{M}_0(i)$ is the marking of the input at initial time and $\mathbb{M}_\tau(o)$ is the marking of the output at time τ. therefore, RPN_A is sound and RPN_B is sound.

In other words, if the cooperative system RPN_c is sound then, exists a time τ where the marking of this workflow is equal to the initial marking. Therefore, since resources are being shared between RPN_A and RPN_B, then, for every resource $\mathbb{P}_{pj}$ belonging to the pool of resources of RPN_A, noted here $\mathbb{P}_{pA}$, this resource belongs to the input of the transition $\mathbb{T}_B$ serving RPN_B and to the output of the transition $\mathbb{T}_A$ since the resource should return to its original RPN_A. Also, for every resource $\mathbb{P}_{pk}$ belonging to the pool of resources of RPN_B, noted here $\mathbb{P}_{pB}$, this resource belongs to the input of the transition $\mathbb{T}_A$ serving RPN_A and to the output of the transition $\mathbb{T}_B$ since the resource should also return to its original RPN_B. Therefore, the sum of markings at a time τ of RPN_A is equal to the initial marking of RPN_A and the sum of markings at a time τ of all resources in RPN_B is equal to the initial marking of RPN_B. Also, the initial marking of the input place of RPN_A will be equal to the marking of the output place of RPN_A at a certain time τ and the initial marking of the input place of RPN_B will be equal to the marking of the output place of RPN_B at a certain time τ. □

This means that all resources in a certain RPN_A or RPN_B are reaching the output from the corresponding input. Therefore, RPN_A is sound and RPN_B is sound.

Lemma 9 (for Theorem 6). *$\forall$ sound tightly coupled RPN, $\exists RPN_i \in RPN | RPN_i$ is loosely coupled and RPN_i is sound.*

Proof (proof of Lemma 9). Since RPN_A is sound and RPN_B is sound, therefore

(1) $\mathbb{M}_0(i_A) = \mathbb{M}_\tau(o_A)$ and $\mathbb{M}_0(i_B) = \mathbb{M}_\tau(o_B)$

(2) $\mathbb{M}_0(\mathbb{P}_{pA}) \equiv \mathbb{M}_\tau(\mathbb{P}_{pA})$ and $\mathbb{M}_0(\mathbb{P}_{pB}) \equiv \mathbb{M}_\tau(\mathbb{P}_{pB})$ therefore,

(3) $\mathbb{P}_{pA} \in \bullet\mathbb{T}_A$ and $\mathbb{P}_{pB} \in \bullet\mathbb{T}_B$ and $\mathbb{P}_{pA} \in \mathbb{T}_A\bullet$ and $\mathbb{P}_{pB} \in \mathbb{T}_B\bullet$, therefore,

(4) $\forall \mathbb{P}_{pj} \in \mathbb{P}_p, \exists \mathbb{P}_{pj} \in \mathbb{P}_{pA} | \mathbb{P}_{pj} \in \bullet\mathbb{T}_A$ and $\mathbb{P}_{pj} \in \mathbb{T}_A\bullet$ and

(5) $\exists \mathbb{P}_{pk} \in \mathbb{P}_{pB} | \mathbb{P}_{pk} \in \bullet\mathbb{T}_B$ and $\mathbb{P}_{pk} \in \mathbb{T}_B\bullet$, therefore,

(6) $\mathbb{M}_0(\mathbb{P}_{pj}) \equiv \mathbb{M}_\tau(\mathbb{P}_{pj})$ and $\mathbb{M}_0(\mathbb{P}_{pk}) \equiv \mathbb{M}_\tau(\mathbb{P}_{pk})$; therefore, $\forall RPN_i \in RPN$, RPN is sound and RPN_i is sound and loosely coupled.

In other words, since RPN_A and RPN_B are two sound frameworks that are cooperating together, then the initial marking of the input place of RPN_A is equal to the marking of the output place of RPN_A at a time τ and the initial marking of the input place of RPN_B is equal to the marking of the output place of RPN_B at a time τ. Also, the initial marking of the resources pool in RPN_A is equal to the marking of this pool at a time τ and the initial marking of the resources pool in RPN_B is equal to the marking of this pool at a time τ. Moreover, the pool of resources of RPN_A, $\mathbb{P}_{pA}$, belongs to the input of the transition of RPN_A, $\bullet\mathbb{T}_A$, and then belongs to the output of the transition after being served, $\mathbb{T}_A\bullet$; similarly, the pool of resources of RPN_B, $\mathbb{P}_{pB}$, belongs to the input of the transition of RPN_B, $\bullet\mathbb{T}_B$, and then belongs to the output of the transition after being served, $\mathbb{T}_B\bullet$. Therefore, for every resource $\mathbb{P}_{pj}$ belonging to the pool of resources $\mathbb{P}_p$, either for RPN_A or RPN_B, a resource $\mathbb{P}_{pj}$ exists that belongs to the pool of resources of RPN_A, $\mathbb{P}_{pA}$, where $\mathbb{P}_{pj}$ is serving a transition in RPN_A and exists a resource $\mathbb{P}_{pK}$ belonging to the pool of resources of RPN_B, $\mathbb{P}_{pB}$, where $\mathbb{P}_{pk}$ is serving a transition in RPN_B. Therefore, the initial marking of the pool $\mathbb{P}_{pj}$ is equal to the marking of this pool at a time τ and the initial marking of the pool $\mathbb{P}_{pk}$ is equal to the marking of this pool at a time τ. Thus, for every RPN_i that belongs to a workflow RPN, RPN is sound, and RPN_i is sound and loosely coupled. □

5. Framework Scalability

Scalability of our framework falls under the soundness and efficiency of the general framework regardless of the number of cooperating RPN added to the system. It is a design quality measure of the framework. Our RPN_c is guaranteed to be scalable and remain sound as demonstrated below using mathematical induction [35].

Proof of Scalability. Mathematical induction technique is used in order to prove the scalability of the framework. Mathematical induction is a mathematical proof technique that allows the proof of a statement following three steps:

(1) The base case where in our case the framework is proven to be sound for one RPN_c, where $RPN_c = RPN_1 \otimes RPN_2$

(2) The second step is the inductive hypothesis where the framework is assumed to be sound for (k) RPN_c where $RPN_c = \{RPN_1 \otimes RPN_2 \otimes \cdots \otimes RPN_k\}$

(3) The final step which is the inductive step where the framework is proven to remain sound for (k+1) RPN_c. $RPN_c = \{RPN_1 \otimes RPN_2 \otimes \cdots \otimes RPN_k \otimes RPN_{k+1}\}$

Theorem 10. *$\forall RPN_c | RPN_c = \{RPN_1 \otimes RPN_2 \otimes \cdots \otimes RPN_n\}$, if $RPN_1, RPN_2, \ldots, RPN_n$ are sound RPNs therefore RPN_c is sound.*

Proof by Induction. The three steps mentioned earlier are represented as follows:

Base case: $\exists RPN_c = RPN_1 \otimes RPN_2 | RPN_c$ is sound. RPN_c is a cooperative sound system as proven before in Theorem 6.

Inductive Hypothesis: given (K) RPN, we assume that $\exists RPN_c = \{RPN_1 \otimes RPN_2 \otimes \cdots \otimes RPN_k\} | RPN_c$ is a sound cooperative framework.

Inductive Step: it is required to prove that $RPN_c = \{RPN_1 \otimes RPN_2 \otimes \cdots \otimes RPN_k \otimes RPN_{(k+1)}\}$ is a sound cooperative framework.

Proof. Assuming $RPN_A = \{RPN_1 \otimes RPN_2 \otimes \cdots \otimes RPN_k\}$ and $RPN_B = RPN_{k+1}$ then if RPN_A is sound from the inductive hypothesis and RPN_B is sound from Theorem 1; therefore the cooperation $\otimes$ between them is still sound from Theorem 6,

then $\mathrm{RPN}_c = \{\mathrm{RPN}_1 \otimes \mathrm{RPN}_2 \otimes \cdots \otimes \mathrm{RPN}_k \otimes \mathrm{RPN}_{(k+1)}\}$ is still sound. Therefore, the framework is scalable. □

Lemma 11 (for Theorem 10). *For every cooperative system RPN_c that is sound, if a new sound workflow, RPN_i, cooperates with RPN_c, the total workflow remains sound. Given (n) $RPN|RPN_c = \{RPN_1 \otimes RPN_2 \otimes \cdots \otimes RPN_n\}$, $\forall RPN_i \otimes RPN_c|RPN_i$ is sound, then RPN_c remains sound.*

6. Framework Separability and Serializability

A workflow is said to be separable if and only if the execution of the multiple tokens in the input will not affect each other. In other words, if the execution of a token A will cause token B not to reach the output, then the workflow is not separable. Separability is viewing the system as a parallel system where the system is replicated as many times as the number of tokens available and every workflow instance is fully dedicated to one token [36].

Serializability is viewing the system as a sequential system where tokens are executed one after another and the successful execution of one token will not cause the failure of another one. Since siphons are controlled then resources are always available in their pools at a certain time.

6.1. None-Cooperative Systems. In this subsection, three theorems are presented in order to proof the separability and serializability of the proposed RPN model with no cooperation among systems.

Theorem 12. *iif $RPN_\ominus$ is sound, then $RPN_\ominus$ is separable.*

Two-Way Proof. If $\mathrm{RPN}_\ominus$ is sound, then $\mathrm{RPN}_\ominus$ is separable.

Proof (proof-a of Theorem 12). Since $\mathrm{RPN}_\ominus$ is sound, therefore $\forall m \in i, o \in [m\rangle$, where $m \in \mathbb{P}_p$ and $\mathbb{P}_p$ represents the patient pool. Therefore, $\forall a \in \mathbb{P}_R, \mathbb{M}_{t+\tau}(\mathbb{P}_R) \in [\mathbb{M}_t(\mathbb{P}_R)\rangle$. □

$\mathbb{P}_R = \mathbb{P}_G - \mathbb{P}_p$, $\mathbb{P}_G$ is the total pools and a represents tokens available in places $\mathbb{P}$. Therefore, $\forall a \in \mathbb{P}_p, \exists\tau|\mathbb{M}_{t+\tau}(\mathbb{P}_R)$ is sufficient for output o to be reachable by token a. Therefore, $\mathrm{RPN}_\ominus$ is separable.

In other words, since the RPN is sound, it means the output is reachable from the input at a certain time τ and critical sections are controlled. Therefore, resources return to their pools and are available for another patient. Thus, the activity of a certain patient at time t does not affect another activity of another arriving patient at time $t + \tau$.

If $\mathrm{RPN}_\ominus$ is separable, then $\mathrm{RPN}_\ominus$ is sound

Proof (proof-b of Theorem 12). Since $\mathrm{RPN}_\ominus$ is separable then $\forall \mathbb{M}_{t+\tau}(\mathbb{P}_R) \in [\mathbb{M}_t(\mathbb{P}_R)\rangle$. Therefore, $\forall a \in \mathrm{i(t)}, a \in \mathrm{o(t} + k\tau)$. Therefore, $\mathrm{RPN}_\ominus$ is sound.

In other words, if RPN is separable, that means tokens are not affecting each other and therefore, the marking of resources at a certain time $t + \tau$ belongs to the reachability of the marking of this pool at a certain time and therefore a certain patient/token belonging to the input i at time t will definitely belong to the output o at time $t + k\tau$. Thus, critical sections are controlled and therefore the system is sound. □

Theorem 13. *iif* $\mathrm{RPN}_\ominus$ *is sound, then* $\mathrm{RPN}_\ominus$ *is serializable.*

Two Ways Proof. If $\mathrm{RPN}_\ominus$ is sound, then $\mathrm{RPN}_\ominus$ is serializable.

Proof (proof-a of Theorem 13). Since $\mathrm{RPN}_\ominus$ is sound, then $\forall \mathbb{M}_t \in i, \mathbb{M}_{t+\tau} \in o$ and since $\mathbb{M}(\mathbb{P}_p) > \mathbb{M}(\mathbb{P}_R)$, therefore $\exists\tau|\mathbb{M}(\mathbb{P}_R) = 0$ and since $o \in [\mathbb{M}(i)\rangle$. Therefore, $\exists\tau|\mathbb{P}_R(\tau) \neq 0$.

Therefore, $\forall a_i, a_j, \tau(a_i) > \tau(a_j)$, therefore $\mathrm{RPN}_\ominus$ is serializable.

In other words, if RPN is sound then for every marking belonging to the input i at a time t, the marking belongs also to the output o at a time $t + \tau$. Since the number of patients is always greater than the number of resources available then, the marking of patient's pool is greater than the marking of resource's pool; which means that at a certain time τ, the marking of resources pool can be equal to 0 where no resources are available. Also, since the output o is reachable from the input i then, there always exist a certain time τ where a resource returns to its corresponding pool and therefore $\mathbb{P}_R(\tau) \neq 0$. This leads to having two tokens a_i and a_j where the time of execution of one token is greater than the time of execution of the other token and therefore both tokens are not being executed at the same time. Therefore, RPN is serializable.

If $\mathrm{RPN}_\ominus$ is serializable, then $\mathrm{RPN}_\ominus$ is sound □

Proof (proof-b of Theorem 13). Since $\mathrm{RPN}_\ominus$ is serializable, then, $\mathbb{M}_\tau(\mathbb{P}_R) \geq 1$ and $\forall\tau|\mathbb{M}_\tau(i) \neq 0$. Therefore, $O \in |\mathbb{M}(i)\rangle$. Therefore, $\mathrm{RPN}_\ominus$ is sound.

In other words, since RPN is serializable then the marking of the resource pool is definitely greater than or equal to 1; which means there is always an available resource in the corresponding pool as long as there is an available token at a certain time τ. Therefore, the output is always reachable. Since the output is always reachable from the input, therefore RPN is sound. □

Theorem 14. *iif $RPN_\ominus$ is serializable, then $RPN_\ominus$ is separable.*

Two Ways Proof. If $\mathrm{RPN}_\ominus$ is serializable, then $\mathrm{RPN}_\ominus$ is separable

Proof (proof-a of Theorem 14). From Theorem 13, if $\mathrm{RPN}_\ominus$ is serializable then $\mathrm{RPN}_\ominus$ is sound. From Theorem 12, if $\mathrm{RPN}_\ominus$ is sound then $\mathrm{RPN}_\ominus$ is separable. Therefore, if $\mathrm{RPN}_\ominus$ is serializable then $\mathrm{RPN}_\ominus$ is separable.

If $\mathrm{RPN}_\ominus$ is separable, then $\mathrm{RPN}_\ominus$ is serializable □

Proof (proof-b of Theorem 14). From Theorem 13, if $\mathrm{RPN}_\ominus$ is sound then $\mathrm{RPN}_\ominus$ is serializable. From Theorem 12, if $\mathrm{RPN}_\ominus$ is separable then $\mathrm{RPN}_\ominus$ is sound. Therefore, if $\mathrm{RPN}_\ominus$ is separable then $\mathrm{RPN}_\ominus$ is serializable. □

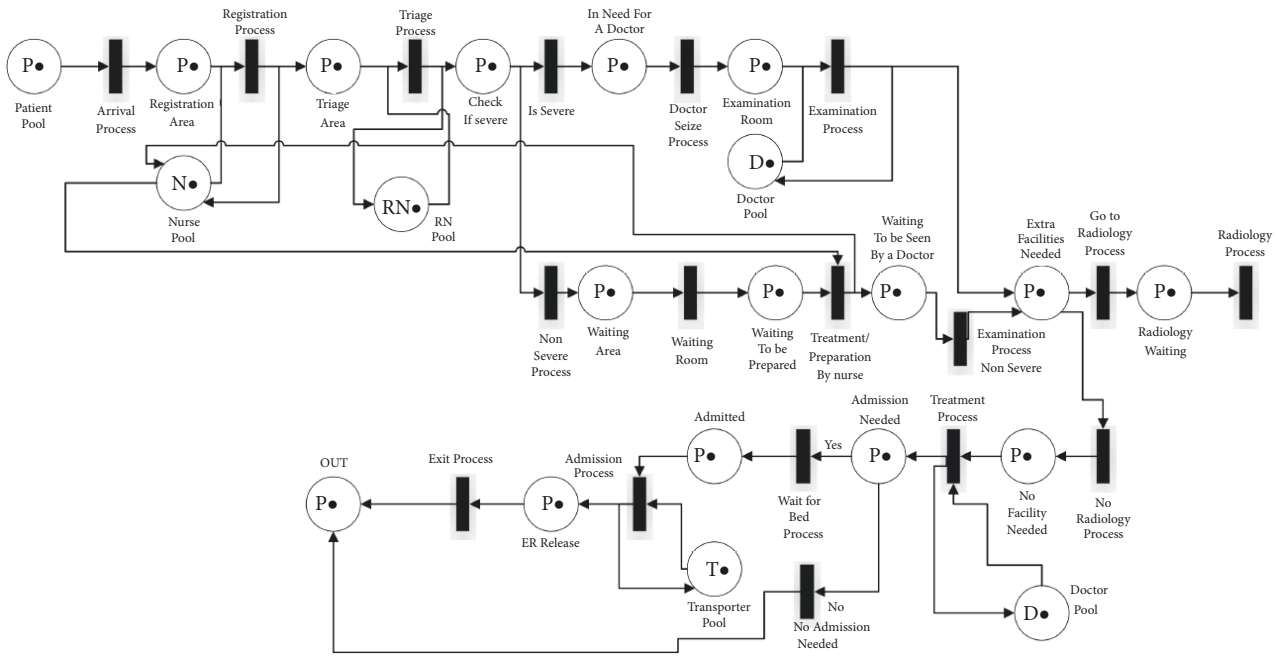

P• PATIENT ENTITY
N• NURSE ENTITY
RN• REGISTERED NURSE ENTITY
D• DOCTOR ENTITY
T• TRANSPORTER ENTITY

Figure 2: Emergency room stages.

6.2. Cooperative Systems. In this subsection, three theorems are presented in order to proof the separability and serializability of the proposed RPN model with cooperation among systems.

Theorem 15. *RPN_c is separable iff RPN_c is sound.*

Two Ways Proof. If RPN_c is sound, then RPN_c is separable.

Proof (proof-a of Theorem 15). From Theorem 10, since RPN_c is sound and from Theorem 12, if RPN_c is sound then RPN_c is separable, therefore, RPN_c is separable.

If RPN_c is separable, then RPN_c is sound. □

Proof (proof-b of Theorem 15). From Theorem 10, RPN_c is sound and from Theorem 7, RPN_c is scalable. Then, RPN_c is a valid RPN. Therefore, from Theorem 12, iff RPN is sound then RPN is separable. Therefore, RPN_c is separable. □

Theorem 16. *RPN_c is serializable iff RPN_c is sound.*

Proof (proof of Theorem 16). From Theorem 10, RPN_c is sound. From Theorem 7, RPN_c is scalable. Then, RPN_c is a valid RPN, therefore, from Theorem 13, iff RPN is sound then RPN is serializable. Therefore, RPN_c is serializable. □

Theorem 17. *RPN_c is serializable iff RPN_c is separable.*

Proof (proof of Theorem 17). Figures 2 and 3 represent the flow in each ER and the common units between the two ERs, respectively. The stages in Figure 2 are similar for ER A and ER B. The common units which are represented in Figure 3 are the radiology and billing. On the other hand, Figure 4 describes the cooperation of the two ERs. In Figure 4, patients leaving the radiology/billing stage will follow the checking attribute stage.

From Theorem 10, RPN_c is sound. From Theorem 7, RPN_c is scalable. Then, RPN_c is a valid RPN. Therefore, from Theorem 14, iff RPN is serializable then RPN is separable. Therefore, RPN_c is serializable iff RPN_c is separable. □

7. Cooperative Behavior Modeling of Healthcare Units

The healthcare unit along with the flow of patients are modeled using the proposed RPN. The Petri net framework is modeled by two RPNs in order to describe the two emergency rooms that constitute the ED: ER A and ER B. The entities described in the model are same for both ERs and some are common (such as for radiology and billing). The customer refers to the patient and the resources to the medical resources who serve this patient. In this RPN, the transitions represent each stage of the model. The places represent the entity pools such as patients or medical resources and the transfer between stages. These places and transitions are

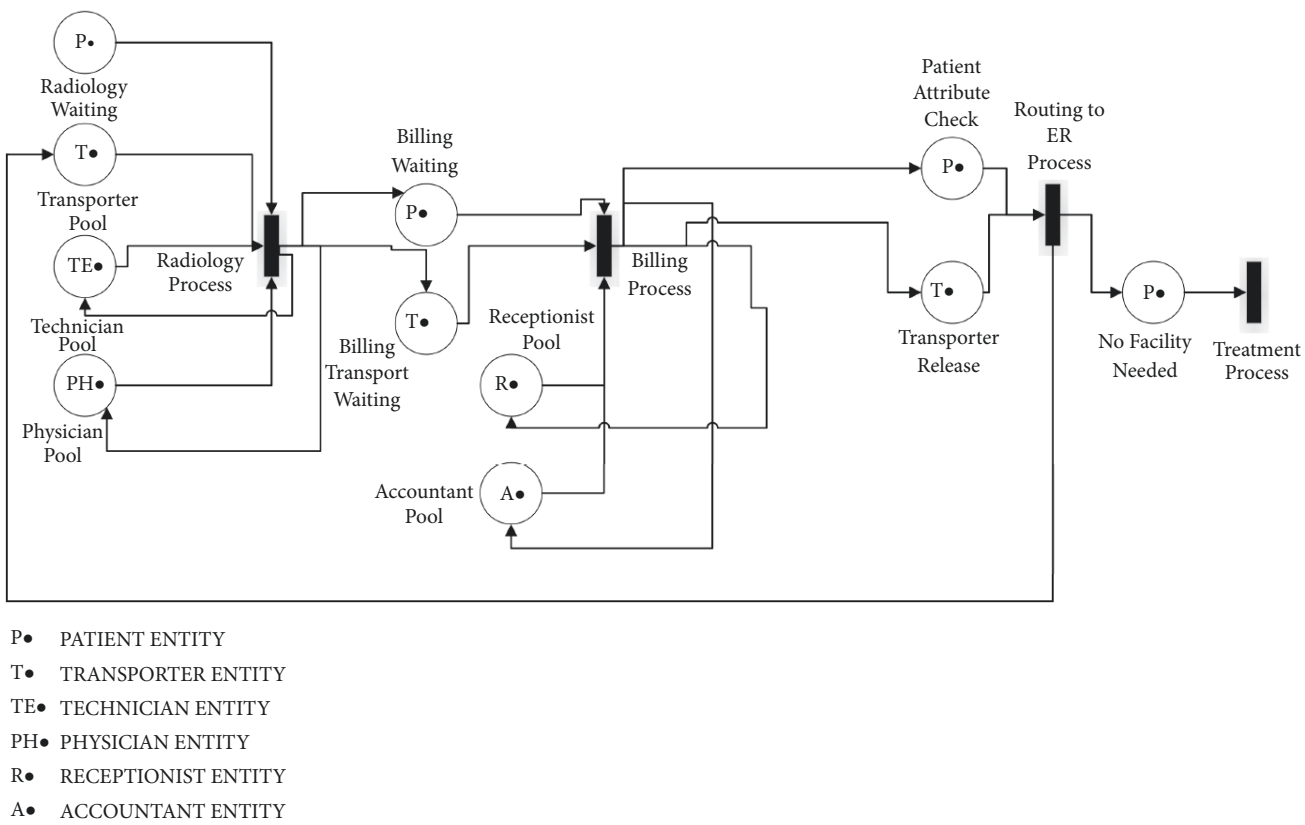

Figure 3: Petri net radiology/billing.

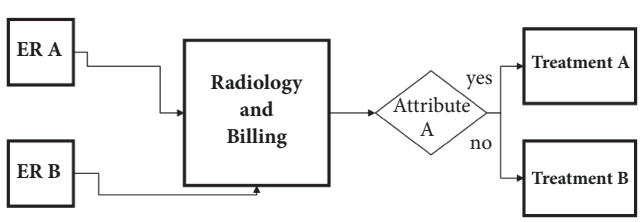

Figure 4: Petri net model flowchart.

connected with directed arcs called connections. Each entity in the model has a defined number of resources or tokens which is called marking.

This patient will continue his flow by moving to Treatment A if he is coming from ER A and to Treatment B if he is coming from ER B. It is trustworthy to mention here that in Figure 4, patient, whether A or B, should follow the remaining flow after reaching the treatment stage. The medical resources pools are named as follows: Doctor Pool, RN Pool, Nurse Pool, Transporter Pool, Accountant Pool, Receptionist Pool, Physician Pool, and Technician Pool. In order to control the critical sections in the model and avoid siphons these resources should always return to their corresponding pools after accomplishing a certain task. We say here that the model is sound [36]. The only entity that flows from the beginning till the end of the system is the patient. All these resources are nonconsumable. As for the patient, it is an entity that flows from the beginning till the end of the system and it is not consumable. The flow of patients in the system is described by the arrival to the ER until the exit either to another unit (admitted to hospital) or exiting home. Some transitions need more than the patient entity as entry place in order to be enabled.

8. Simulation and Results

The proposed model RPN is simulated and results are shown in Figure 5. The results show that the billing unit suffers from bottleneck which is normal since this unit is shared by the two emergency rooms ER A and ER B. Thus, the highest utilization rate is for the corresponding resources: Accountant and Receptionist. These resources, being the busiest in the system, must be considered for future optimization. Also, the radiology unit should be considered for future improvement as per the simulation results. The workload of each resource is depicted in Figure 6. It is obvious from the results that nurses are very busy and need to be also considered during future optimization stage along with technicians and accountants. Since transporters wait for patients to finish a certain activity in another unit and then forward them to the emergency department and vice versa, they suffer from high workload and busy service time. The future optimization phase should

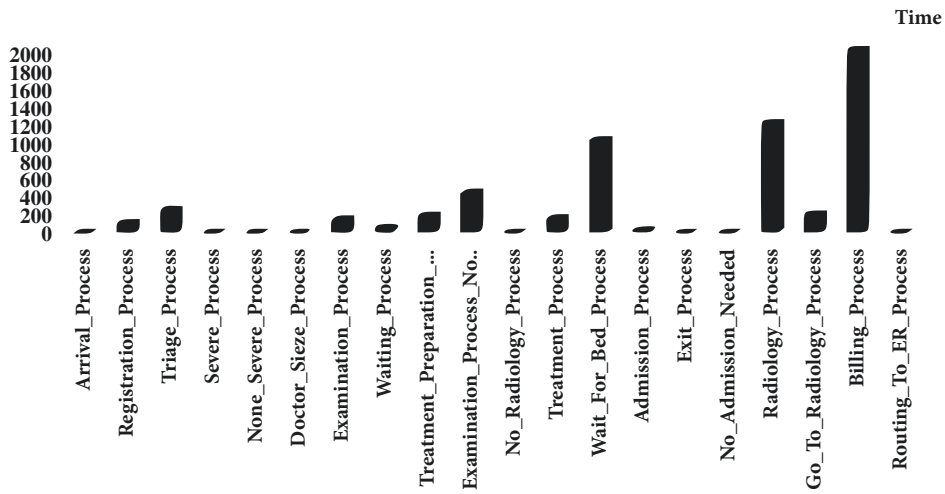

Figure 5: Units service time.

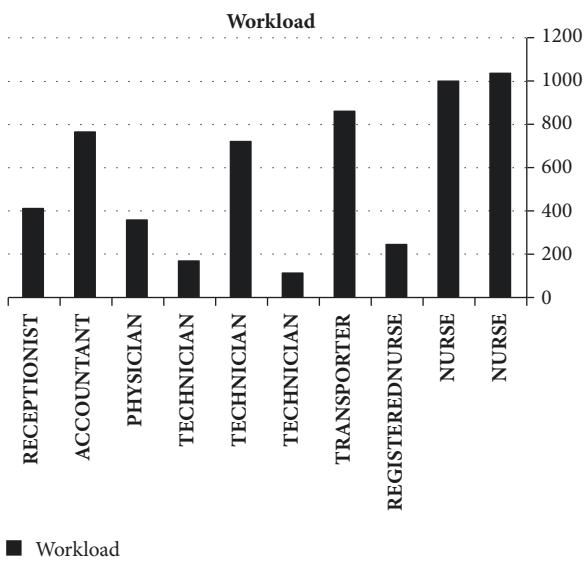

Figure 6: Resources workload.

include different allocation of these resources or adding more medical resources. By suggesting new resource dimensions, the average waiting time of patients may be decreased always maintaining the same level of care and a reduced resource workload. This may lead to extra patients being seen and thus extra patients leaving the system which results in a higher hospital revenue. In previous work [37], the same ED was simulated using Arena software and the results obtained are similar to the RPN simulation. This similarity in results validates the RPN simulation outputs and thus the model is considered reliable and ready for future experimentation.

9. Conclusion and Future Work

Healthcare systems are considered complex and very hard to manage which urge decision makers to always follow up on its daily operations in order to improve and maintain a stable flow of patients. In the literature, researchers proved that Petri net is an efficient and powerful modeling technique in order to describe a real-life concurrent system such as emergency departments without any interruption of the real system.

In this study a new type of Petri net modeling is presented, which is useful for all type of queuing systems such as hospitals, restaurants, theaters, etc. This new framework considers only human resources and is called RPN (Resource Preservation Net). These resources are not consumable and always return to their pools after accomplishing a certain task in order to control system siphons. This RPN is applied to a real-life system: the ED of a general hospital in Lebanon. This ED is formed of two emergency rooms that operate separately and have separate medical resources: ER A and ER B. Only the radiology and billing units of the hospital are shared among the ERs. Here, the RPN describes the flow of patients in the ED from the time he arrives to the system until he is discharged. In this study, cooperative and noncooperative systems are proven to be sound using discrete mathematics. Noncooperative systems mean that units are working smoothly without any interaction between each other and with no cooperation between resources or any other unit. Cooperative systems show the difference between the cooperation of medical resources only or the cooperation of medical resources and other units by sharing the customers among different units such as radiology and billing. Scalability of the workflow is proven mathematically to remain sound, where many ERs or more generally any unit can be added to the overall system in order to improve the operation of the organization, while maintaining a sound cooperation among all units. These mathematical suggestions are presented using several theorems that can be applicable to any type of organization and specifically to any type of emergency department in a healthcare system.

As a future work, optimization of the suggested mathematical model will be presented in order to improve the operation and services offered to patients. Workflow optimization

Table 1: Mathematical notations.

Notation	Description
$\mathbb{P}$	Set of places in the Petri net
$\mathbb{T}$	Set of transitions in the Petri net
$\mathbb{T}_i$	Transition with index i in the Petri net
$\mathbb{P}_i$	Place with index i in the Petri net
i	Input place in Petri net
o	Output place in Petri net
$\mathbb{F}$	Topology of the Petri net. The arcs between places and transitions
τ, t	Two different indices for time
$\mathbb{M}$	Marking, distribution of tokens in places
$\mathbb{M}(i)$	Marking of the input
$\mathbb{M}(o)$	Marking of the output
$\mathbb{M}_\tau$	Marking at a time τ
$\mathbb{M}_0$	Marking at initial time
$\mathbb{M}_p$	Marking of place p
$\bullet\mathbb{P}$	Set of transitions input to place $\mathbb{P}$
$\mathbb{P}\bullet$	Set of transitions output from place $\mathbb{P}$
$\bullet\mathbb{T}$	Set of places input to transition $\mathbb{T}$
$\mathbb{T}\bullet$	Set of places output from transition $\mathbb{T}$
$\bullet i$	Set of transitions proceeding the input place i. This set is always empty
$o\bullet$	Set of transitions following the output place o. This set is always empty
a	Any token in a place
a_i	Token index i in a place
$\mathbb{P}_p$	Set of pools
$[\mathbb{T}_i\rangle$	Set of nodes reachable from transition $\mathbb{T}_i$
$[\mathbb{P}_i\rangle$	Set of nodes reachable from place $\mathbb{P}_i$
Λ	Set of capabilities provided by resources and transitions
λ	Set of request for service
$\mathbb{R}$	Set of resources in the Petri net
$\Theta(\mathbb{P}_p, \mathbb{R})$	Mapping function that maps resources $\mathbb{R}$ to pools of resources $\mathbb{P}_p$
$\mathrm{RPN}_\ominus$	Any RPN, where $\mathrm{RPN}_\ominus \in \{\mathrm{RPN}\}$

includes the study of a multidimensional probabilistic problem where patient reward and system reward are considered.

Appendix

This section is dedicated towards explaining the mathematical notations and symbols used in this paper.

See Table 1.

Data Availability

No data were used to support this study.

Conflicts of Interest

The authors declare that they have no conflicts of interest.

References

[1] Z. Zeng, X. Ma, Y. Hu, J. Li, and D. Bryant, "A simulation study to improve quality of care in the emergency department of a community hospital," *Journal of Emergency Nursing*, vol. 38, no. 4, pp. 322–328, 2012.

[2] X. Ge, Q. Han, D. Ding, X. Zhang, and B. Ning, "A survey on recent advances in distributed sampled-data cooperative control of multi-agent systems," *Neurocomputing*, vol. 275, pp. 1684–1701, 2018.

[3] B. J. Buckley, E. M. Castillo, J. P. Killeen, D. A. Guss, and T. C. Chan, "Impact of an express admit unit on emergency department length of stay," *The Journal of Emergency Medicine*, vol. 39, no. 5, pp. 669–673, 2010.

[4] D. R. Eitel, S. E. Rudkin, M. A. Malvehy, J. P. Killeen, and J. M. Pines, "Improving service quality by understanding emergency department flow: a white paper and position statement prepared for the american academy of emergency medicine," *Journal of Emergency Medicine*, vol. 38, no. 1, pp. 70–79, 2010.

[5] L. P. Baldwin, T. Eldabi, and R. J. Paul, "Simulation in healthcare management: A soft approach (MAPIU)," *Simulation Modelling Practice and Theory*, vol. 12, no. 7-8, pp. 541–557, 2004.

[6] J. S. Hinson, D. A. Martinez, P. S. K. Schmitz et al., "Accuracy of emergency department triage using the Emergency Severity

Index and independent predictors of under-triage and over-triage in Brazil: a retrospective cohort analysis," *International Journal of Emergency Medicine*, vol. 11, no. 1, 2018.

[7] J. M. Zachariasse, D. Nieboer, R. Oostenbrink, H. A. Moll, and E. W. Steyerberg, "Multiple performance measures are needed to evaluate triage systems in the emergency department," *Journal of Clinical Epidemiology*, vol. 94, pp. 27–34, 2018.

[8] O. A. Soremekun, J. K. Takayesu, and S. J. Bohan, "Framework for analyzing wait times and other factors that impact patient satisfaction in the emergency department," *The Journal of Emergency Medicine*, vol. 41, no. 6, pp. 686–692, 2011.

[9] R. J. Holden, "Lean thinking in emergency departments: A critical review," *Annals of Emergency Medicine*, vol. 57, no. 3, pp. 265–278, 2011.

[10] A. M. Alvarez and M. A. Centeno, "Enhancing simulation models for emergency rooms using VBA," in *Proceedings of the the 31st conference*, pp. 1685–1693, Phoenix, Arizona, United States, December 1999.

[11] H. A. Reijers, *Design and Control of Workflow Processes: Business Process Management for the Service Industry*, Springer-Verlag, 2003.

[12] M. Jansen-Vullers and H. Reijers, "Business process redesign at a mental healthcare institute: A coloured petri net approach," in *Proceedings of the Sixth Workshop and Tutorial on Practical Use of Coloured Petri Nets and the CPN Tools (PB-576)*, pp. 21–38, 2005.

[13] M. Dotoli, M. P. Fanti, G. Iacobellis, L. Martino, A. M. Moretti, and W. Ukovich, "Modeling and management of a hospital department via Petri nets," in *Proceedings of the 2010 IEEE Workshop on Health Care Management (WHCM)*, pp. 1–6, Venice, Italy, Feburary 2010.

[14] S. Caíno-Lores, A. Lapin, J. Carretero, and P. Kropf, "Applying big data paradigms to a large scale scientific workflow: Lessons learned and future directions," *Future Generation Computer Systems*, vol. 94, no. 3, p. 27, 2018.

[15] C. Mahulea, L. Mahulea, J.-M. Garcia-Soriano, and J.-M. Colom, "Petri nets with resources for modeling primary health-care systems," in *Proceedings of the 2014 18th International Conference on System Theory, Control and Computing, ICSTCC 2014*, pp. 639–644, Romania, October 2014.

[16] J. Wang, J. Tian, and R. Sun, "Emergency healthcare resource requirement analysis: A stochastic timed Petri net approach," in *Proceedings of the 2018 IEEE 15th International Conference on Networking, Sensing and Control (ICNSC)*, pp. 1–6, Zhuhai, March 2018.

[17] V. Augusto and X. Xie, "A modeling and simulation framework for health care systems," *IEEE Transactions on Systems, Man, and Cybernetics: Systems*, vol. 44, no. 1, pp. 30–46, 2014.

[18] M. P. Fanti, A. M. Mangini, W. Ukovic, J. Lesage, and K. Viard, "A Petri net model of an integrated system for the Health Care At Home management," in *Proceedings of the 2014 IEEE International Conference on Automation Science and Engineering (CASE)*, pp. 582–587, Taipei, August 2014.

[19] B. W. H. Zheng, L. Li, and T. Ruan, "Emergency healthcare resource requirement analysis: A stochastic timed petri net approach," in *Proceedings of the 5th IEEE International Conference on Cyber Security and Cloud Computing*, pp. 106–110, 2018.

[20] H. Darabi, W. L. Galanter, J. Y. Lin, U. Buy, and R. Sampath, "Modeling and integration of hospital information systems with Petri nets," in *Proceedings of the 2009 IEEE/INFORMS International Conference on Service Operations, Logistics and Informatics (SOLI)*, pp. 190–195, Chicago, IL, USA, July 2009.

[21] Y.-L. Chen, P.-Y. Hsu, and Y.-B. Chang, "A Petri net approach to support resource assignment in project management," *IEEE Transactions on Systems, Man, and Cybernetics: Systems*, vol. 38, no. 3, pp. 564–574, 2008.

[22] J. Park, *Structural Analysis and Control of Resource Allocation Systems Using Petri Nets*, Georgia Institute of Technology, 2000.

[23] W. M. P. Van der Aalst, "The application of Petri nets to workflow management," *Journal of Circuits, Systems and Computers*, vol. 8, no. 1, pp. 21–66, 1998.

[24] W. M. P. van der Aalst, A. H. M. ter Hofstede, and M. Weske, "Workflow verification: Finding control-flow errors using petri-net-based techniques," in *Proceedings of the Business Process Management*, pp. 161–183, 2003.

[25] W. M. van der and Aalst., "Challenges in business process management: Verification of business processes using petri nets," *Bulletin of the EATCS*, vol. 80, no. 174-199, p. 32, 2003.

[26] M. À. Piera, M. Narciso, A. Guasch, and D. Riera, "Optimization of logistic and manufacturing systems through simulation: a colored petri net-based methodology," *Simulation*, vol. 80, no. 3, pp. 121–129, 2004.

[27] E. J. Macías and M. P. de la Parte, "Simulation and optimization of logistic and production systems using discrete and continuous petri nets," *Simulation*, vol. 80, no. 3, pp. 143–152, 2016.

[28] S. Oueida and S. Ionescu, "A resource aware extended workflow model for inconsumable resources: Application to healthcare," in *Proceedings of the International Conference on Management and Industrial Engineering*, pp. 377–389, Niculescu Publishing House, 2017.

[29] J. Kim, A. Desrochers, and A. Sanderson, "Task planning and project management using Petri nets," in *Proceedings of the IEEE International Symposium on Assembly and Task Planning*, pp. 265–271, Pittsburgh, PA, USA.

[30] V. K. A. Kumar and L. S. Ganesh, "Use of petri nets for resource allocation in projects," *IEEE Transactions on Engineering Management*, vol. 45, no. 1, pp. 49–56, 1998.

[31] L.-C. Liu and E. Horowitz, "A formal model for software project management," *IEEE Transactions on Software Engineering*, vol. 15, no. 10, pp. 1280–1293, 1989.

[32] P. U. Abara, F. Ticozzi, and C. Altafini, "Spectral conditions for stability and stabilization of positive equilibria for a class of nonlinear cooperative systems," *IEEE Transactions on Automatic Control*, vol. 63, no. 2, pp. 402–417, 2018.

[33] W. M. van der Aalst, K. M. van Hee, A. H. ter Hofstede et al., "Soundness of workflow nets: classification, decidability, and analysis," *Formal Aspects of Computing*, vol. 23, no. 3, pp. 333–363, 2011.

[34] H. Yamasaki, *On the Structure of Siphons of Petri Nets (Logics, Algebras and Languages in Computer Science)*, 2014.

[35] M. Sipser, *Introduction to the Theory of Computation*, Thomson Course Technology, 2006.

[36] Y. Kotb and A. Baumgart, "An extended Petri net for modeling workflow with critical sections," in *Proceedings of the IEEE International Conference on e-Business Engineering (ICEBE'05)*, pp. 134–141, Beijing, China, October 2005.

[37] S. Oueida, S. Kadry, and P. Abichar, "Emergency department proposed model: Estimating kpis," in *Proceedings of the International Conference on Management and Industrial Engineering*, pp. 390–403, Niculescu Publishing House, 2017.


Advances in Operations Research
Advances in Decision Sciences
Journal of Applied Mathematics
The Scientific World Journal
Journal of Probability and Statistics
International Journal of Mathematics and Mathematical Sciences
Hindawi
Submit your manuscripts at
www.hindawi.com
Journal of Optimization
International Journal of Engineering Mathematics
International Journal of Analysis
Journal of Complex Analysis
Advances in Numerical Analysis
Mathematical Problems in Engineering
International Journal of Differential Equations
Discrete Dynamics in Nature and Society
International Journal of Stochastic Analysis
Journal of Mathematics
Journal of Function Spaces
Abstract and Applied Analysis
Advances in Mathematical Physics