Hindawi Publishing Corporation
International Journal of Antennas and Propagation
Volume 2013, Article ID 528950, 9 pages
http://dx.doi.org/10.1155/2013/528950

Research Article

An Antenna Measurement System Based on Optical Feeding

Ryohei Hosono and Ning Guan

Optics and Electronics Laboratory, Fujikura Ltd., Sakura-shi 285-8550, Japan

Correspondence should be addressed to Ryohei Hosono; ryohei.hosono@jp.fujikura.com

Received 30 January 2013; Revised 29 March 2013; Accepted 31 March 2013

Academic Editor: Sara Burgos

A radiation measurement system by using optical feeding is proposed. The system replaces conventional electrical feeding to antennas by the optical feeding which is composed of an electrical/optical (E/O) converter, a graded-index (GI) optical fiber, and an optical/electrical (O/E) converter. The GI fiber is used so as the O/E converter becomes very compact by using a simple means of coupling between the fiber and the photo-diode in the converter. A vertical surface emitting laser (VCSEL) is used in the E/O converter to make the system available till 6 GHz. This combination also makes the system cost-effective. The validity as well as the advantage of the system is demonstrated by measuring an ultra-wideband (UWB) antenna both by the optical and electrical feeding systems and comparing with a calculated result. Ripples in radiation pattern due to the electrical feeding are successfully suppressed by the optical feeding. For example, in a radiation measurement on the azimuth plane at 3 GHz, ripple amplitude of 1.0 dB that appeared in the electrical feeding is reduced to 0.3 dB. In addition, a circularly polarized (CP) antenna is successfully measured by the proposed system to show that the system is available not only for amplitude but also phase measurements.

1. Introduction

Recently, as wireless mobile devices become smaller and smaller, antennas used in the devices are required to be very compact. It becomes even more important to measure precisely such compact antennas for antenna development. However, an antenna must be fed when the antenna is to be measured and the feeding is generally made electrically by microstrip lines, coaxial cables, and so forth. Electrical feeding lines disturb the radiation of the antenna under test (AUT) due to their metallic bodies. In addition, there causes unbalanced currents on the feeding lines to excite unwanted radiation which interferes the original one. The influence becomes significant when the AUT is small. As a consequence, ripples or unwanted peaks appear in the radiation patterns of the AUT. Furthermore, the influence arises not only on the measurement of amplitude but also phase which is a very important parameter in some antennas such as a circularly polarized (CP) antenna.

Using smaller feeding lines and baluns is conventional technique to reduce the influence of feeding lines on antenna measurement. Ferrite chokes and cylindrical conductive caps set on coaxial cables are known to work as balun [1–6]. However, the balun or chokes are only available at narrow and low frequency band, for example, sleeve balun is generally designed near quarter wave length so that the bandwidth is limited [1–5]. On the other hand, replacing electrical feeding by optical one is an effective solution to this problem. For example, optical feeding is introduced to shut off unbalanced currents on electrical feeding lines and avoid influence on radiation of antenna under test (AUT), for wireless handheld terminals [7–9], a log-periodic antenna [10], a biconical antenna [11], a monopole antenna and a log-periodic antenna [12], a planar inverted F antenna (PIFA) [13], and a dipole antenna [14]. Both amplitude and phase of radiation are also evaluated by optical fiber measurement systems [8–10]. In these examples, a edge-emitting lasers such as distributed feed-back (DFB) laser and a single-mode fibers have been implemented. Although the implementations provide wide band measurement, they need external modulators, precise alignment, and relatively large spaces [11, 14]. This makes the system expensive and limits the system miniaturization.

In this paper, we propose a measurement system for radiation patterns by using optical feeding. We use direct

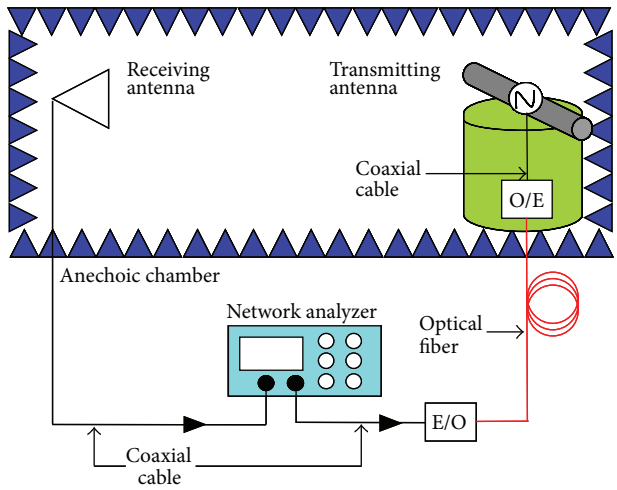

Figure 1: Measurement setup of optical feeding.

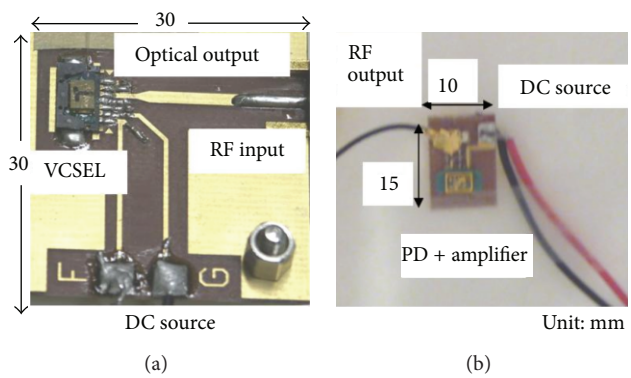

Figure 2: Details of E/O and O/E converters.

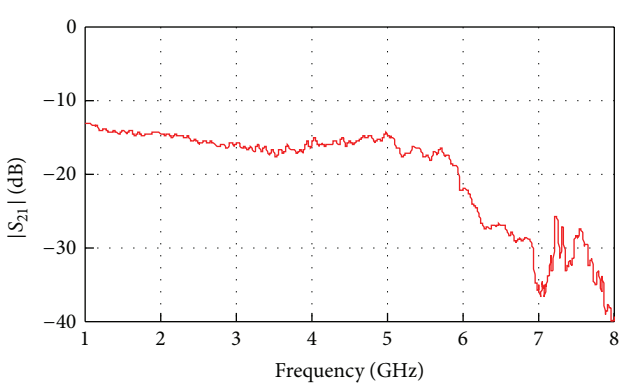

Figure 3: Frequency characteristics of transmission for directly connected E/O and O/E converters.

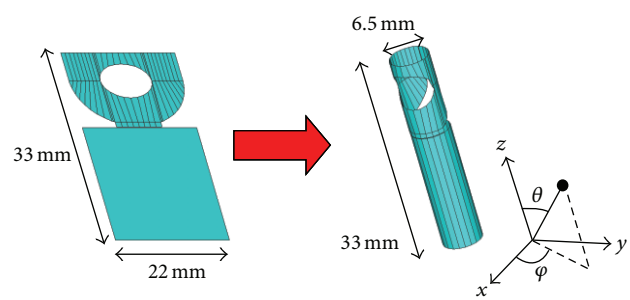

Figure 4: Rolled UWB antenna for measurement.

modulation on a vertical surface emitting laser (VCSEL) and a graded-index (GI) optical fiber as transmission line so as we can realize a compact and cost-effective system and extend the measuring frequency range up to 6 GHz easily. The VCSEL allows high speed modulation and low driving current thanks to its surface emission structure [15, 16]. Its emission profile matches very well with a multimode fiber so that cost-effective and compact butt-joint is available. In addition, the wafer-level testing makes the VCSEL chips cost-effective themselves.

To show the validity and the advantage of the system, a small antenna operating at an ultra-wideband (UWB) is measured by this system. We investigate the influence of the feeding line by changing its wiring with calculated and measured results. The measured results are compared with those measured by a conventional electrical feeding and those obtained

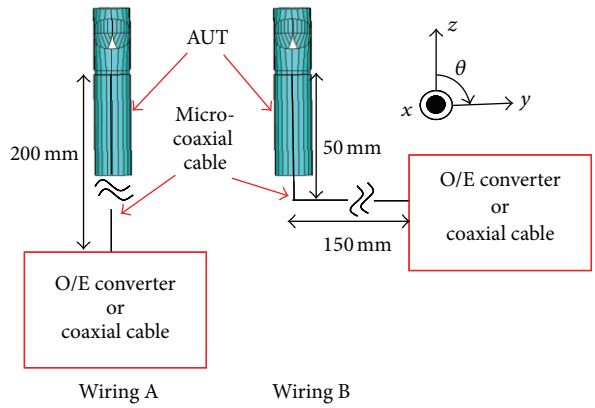

FIGURE 5: Antennas with two different wirings of micro-coaxial cable.

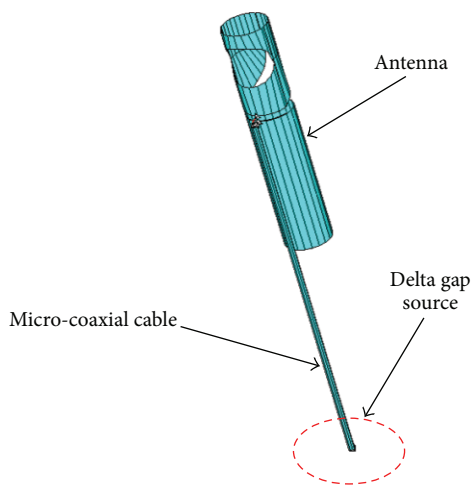

FIGURE 6: Antenna calculation model.

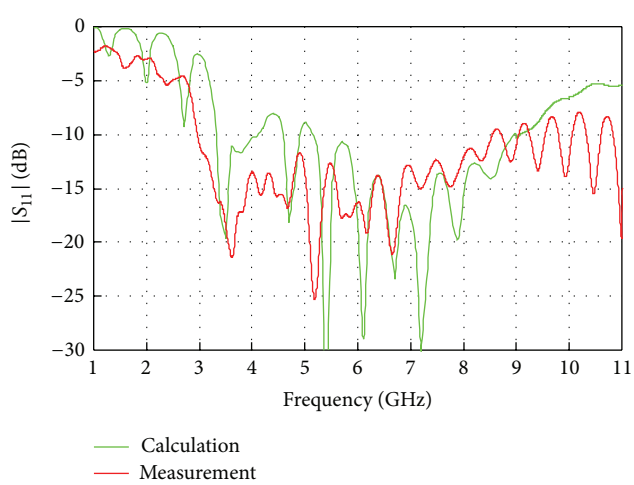

FIGURE 7: Input characteristics for rolled UWB antenna.

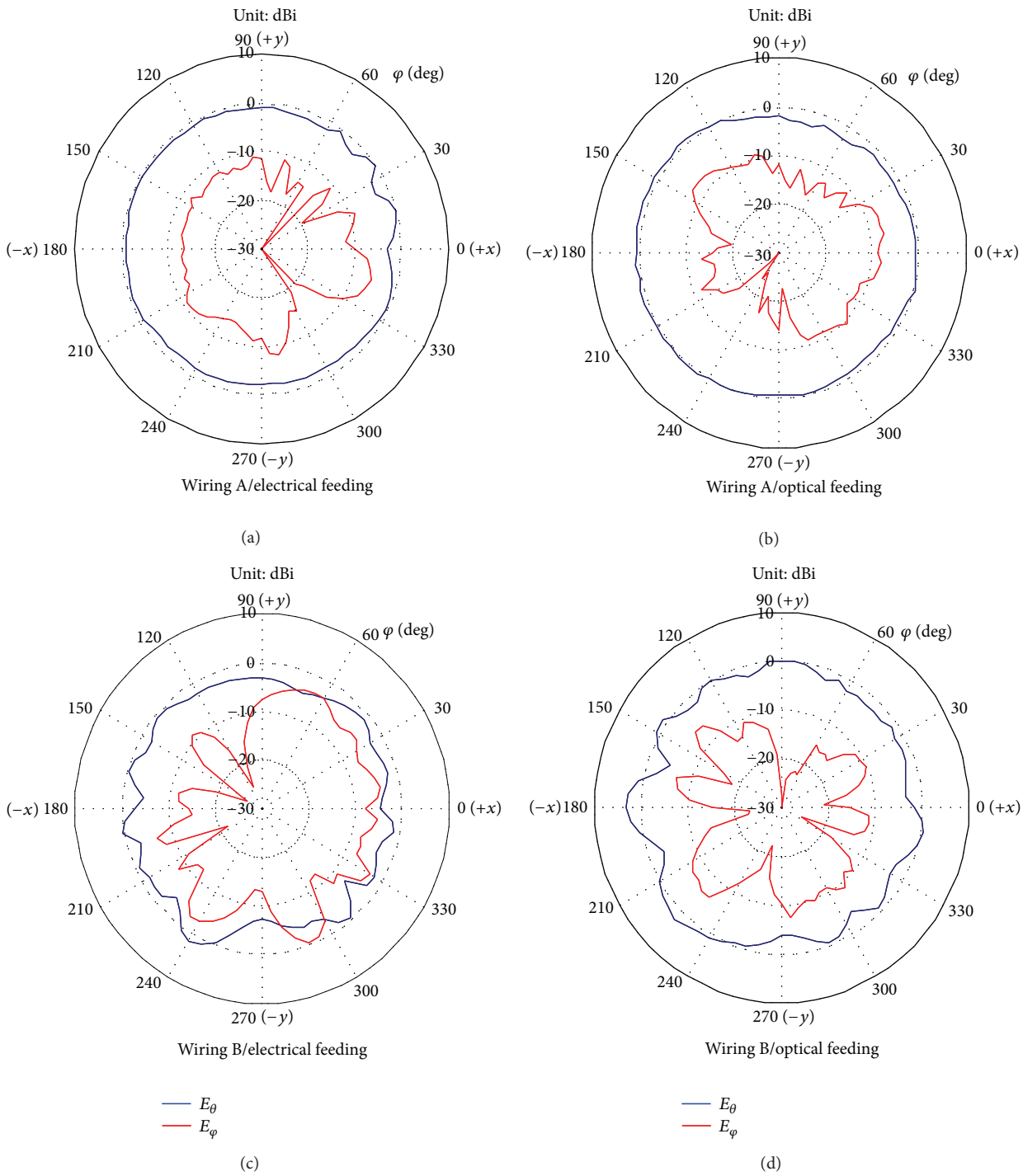

Figure 8: Measured radiation patterns in xy-plane at 5 GHz for optical and electrical feedings.

theoretically. A CP patch antenna for the global positioning system (GPS) application is also measured for investigating the accuracy on phase measurement. A comparison between the optical and electrical measurements and the calculation is also carried out. It is demonstrated that the proposed system can be used for precise measurement for not only amplitude but also phase characteristics of small antennas.

2. Measurement Setup

The proposed measurement setup is schematically shown in Figure 1. It replaces conventional electrical feeding line by electrical/optical (E/O) and optical/electrical (O/E) converters with a GI-fiber. The replacement is done only for the coaxial cable connecting to transmitting antenna. Details of

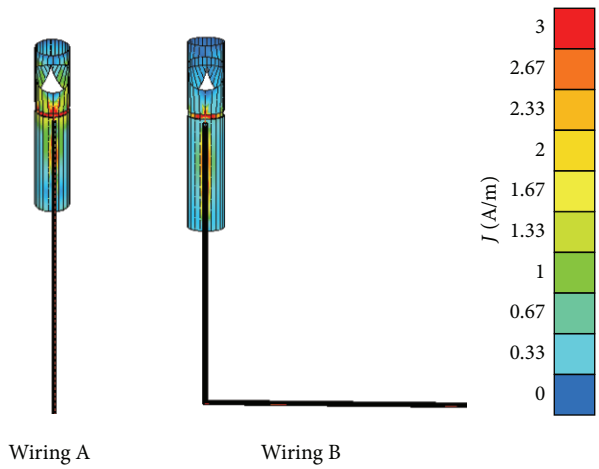

Figure 9: Current distributions on antenna and coaxial cable.

the E/O and O/E converters are shown in Figure 2. The E/O converter is composed of a VCSEL which is directly modulated by RF signal. A dynamic resistance of the VCSEL has a characteristic impedance of 35 Ohm at operating point so that there is slight impedance mismatch. The E/O converter has a size of $30 \times 30 \times 5\,\text{mm}^3$ which does not include the size of DC supply such as battery. The O/E converter is composed of a GaAs PIN photo-diode (PD) and an amplifier where the peak-to-peak output voltage is 250 mV. The PD is spatially coupled with the optical fiber by resin which acts as mirror so as the O/E converter including a tiny RF connector has a size of $10 \times 15 \times 5\,\text{mm}^3$ which does not include the size of DC supply. These E/O and O/E converters give much more compact and simpler configuration than previous reports in [10–14].

A micro-coaxial cable which has the characteristic impedance of 50 Ohm is used to connect the O/E converter to the AUT. The length of the coaxial cable is optimized to minimize metallic influence of the O/E converter and the radiation from the unbalanced currents on the coaxial cable. Figure 3 shows frequency characteristics of the transmission for directly connected O/E and E/O converters where the input power from a network analyzer is 0 dBm. The curve keeps flatness up to 6 GHz and shows a gradual decrease for higher frequencies. Loss emerged in the output power at whole frequencies is due to the conversion loss in the E/O and O/E converters.

3. Experimental Results

3.1. Amplitude Measurement. In order to verify the validity of the proposed system, an UWB antenna shown in Figure 4 is measured, where the antenna is rolled from a flexible flat film so as it has omni radiation patterns in its azimuth plane even at high frequencies [17]. The micro-coaxial cable with a diameter of 0.8 mm and a length of 200 mm is used to connect the antenna and the O/E converter. This long cable is used because we can separate the O/E converter from the antenna and try to investigate the influence of the cable by changing its wiring, as shown in Figure 5. Wiring A sets the coaxial cable parallel to the antenna axis while Wiring B sets a part of the coaxial cable perpendicular to the antenna axis. The antenna is also measured by the electrical feeding where micro-coaxial cable is used. Relative gain measurement [18] is used so that there is no influence from receiving antenna.

To theoretically analyze the antenna, an antenna model is constructed by using the commercial available software WIPL-D as shown in Figure 6, where the feeding cable fed by a delta-gap source [19] is taken into account.

Figure 7 compares the input characteristics of the antenna for the measurement and calculation. Reasonable agreement is obtained between them.

Figure 8 shows the measured radiation patterns in xy-plane at 5 GHz for the antenna with two different wirings shown in Figure 5, for the optical and electrical feedings. In Wiring A, omni-directional radiation patterns are observed in E_θ both for the electrical and optical feedings but fewer ripples occur in the latter one. The radiation of E_φ remains low level compared with that of E_θ for both the feedings. In Wiring B, The level of the radiation of E_φ reaches to 0 dBi and becomes compared to that of E_θ in the electrical feeding. In contrast, the level of the radiation of E_φ keeps relatively low with the maximum value less than −5 dBi, in the optical one. This phenomenon can be explained as follows: unbalanced currents existing on the coaxial cable perpendicular to the antenna axis couple strongly with the radiation of the antenna in the electrical feeding but they are successfully suppressed in the optical one.

Figure 9 shows the calculated current distributions on the antenna and coaxial cable at 5 GHz. It is demonstrated that currents flow on the antenna itself and through the outer conductor of the cable. It suggests that the unbalanced currents flow not only along the direction parallel to the antenna axis but also currents flow along the direction perpendicular to the antenna axis. Many ripples appear in the case of Wiring B because the radiation due to the unbalanced currents couples strongly with that from the antenna itself. Figure 10 shows the radiation patterns for total field at 3 GHz for both the optical and electrical feedings where Wiring A is applied. The calculated radiation patterns are also shown in Figure 10 where the micro-coaxial cable is modeled. The radiation patterns obtained by the optical feeding are better fit to the calculated ones. Null points can be recognized clearly and ripples appearing in the patterns of the electrical feeding are almost suppressed for the optical feeding. For example, ripple amplitude, which is defined as a RMS difference between the measured gain and its 10-point-centered moving average, is 1.0 dB in the electrical feeding and 0.3 dB in the optical one, for the measurement in xy-plane. Measured radiation patterns in xy-plane of the electrical and optical feedings at 3, 4 and 5 GHz are shown in Figure 11. It is also shown that the optical feeding can effectively reduce ripples and obtain omni-directional characteristics in a wide band.

3.2. Phase Measurement. Phase characteristics are also measured for a CP patch antenna shown in Figure 12.

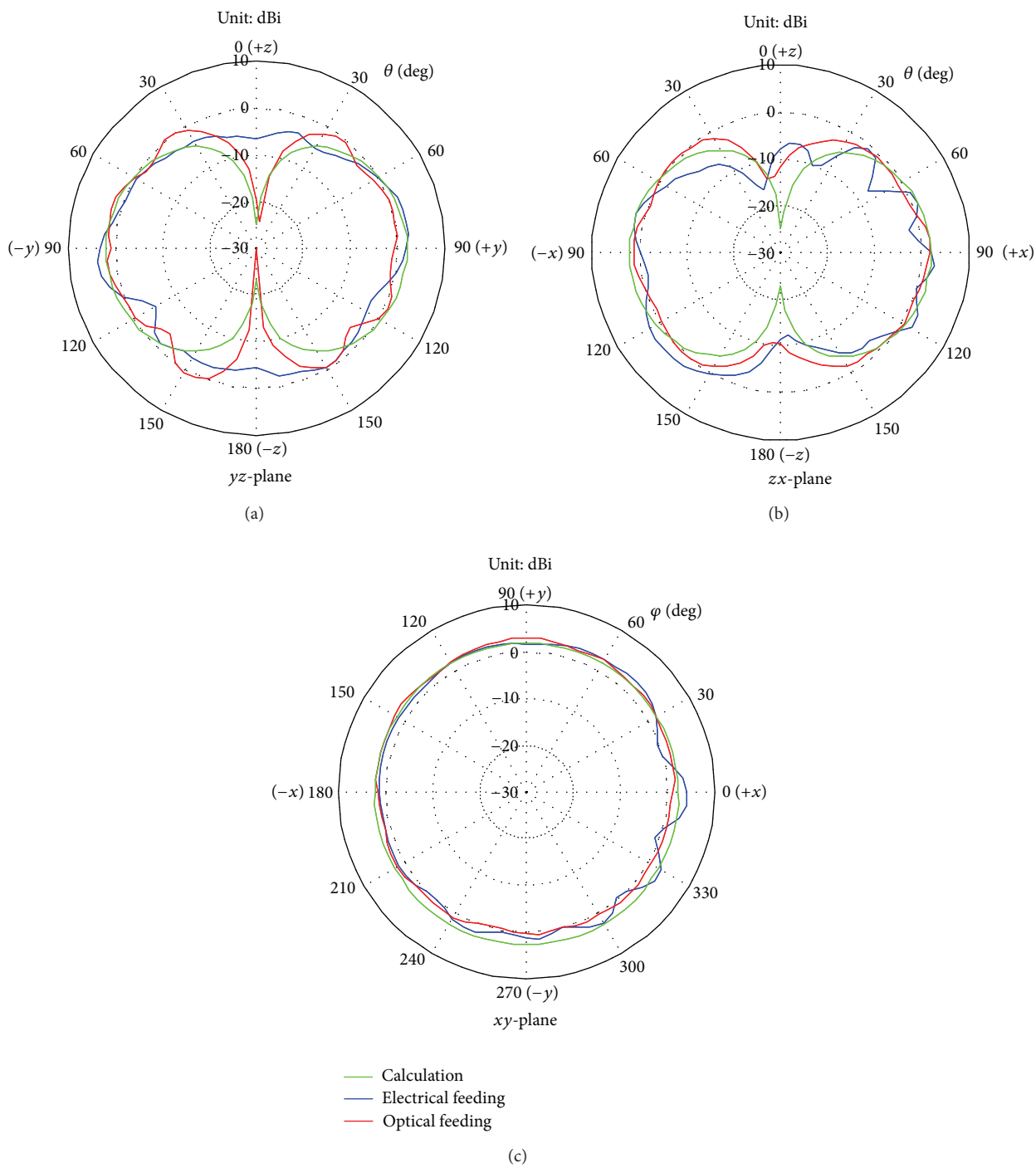

Figure 10: Measured and calculated radiation patterns for total field at 3 GHz.

The dimensions of SMA connector are precisely considered in this investigation. The antenna consists of a patch where two corners of the patch are truncated and the feeding point is shifted from the center to generate a right-handed circularly polarized (RHCP) electric field on a dielectric substrate backed by ground plane [20, 21]. This antenna is designed for the frequency range of the GPS applications from 1573.42 to 1577.42 MHz. The CP patch antenna is evaluated by using the phase-amplitude method [22, 23] in this investigation.

Figure 13 shows the calculated and measured input characteristics for the CP patch antenna. Reasonable agreement is obtained between the calculated and measured results. A difference less than 1.6 dB is observed from 1573 to 1577 MHz. It is shown that the antenna has a sufficient bandwidth at the GPS band.

Figure 14 shows the frequency characteristics of the axial ratio defined as the ratio between the amplitudes of the major and minor polarizations of the antenna at the direction of

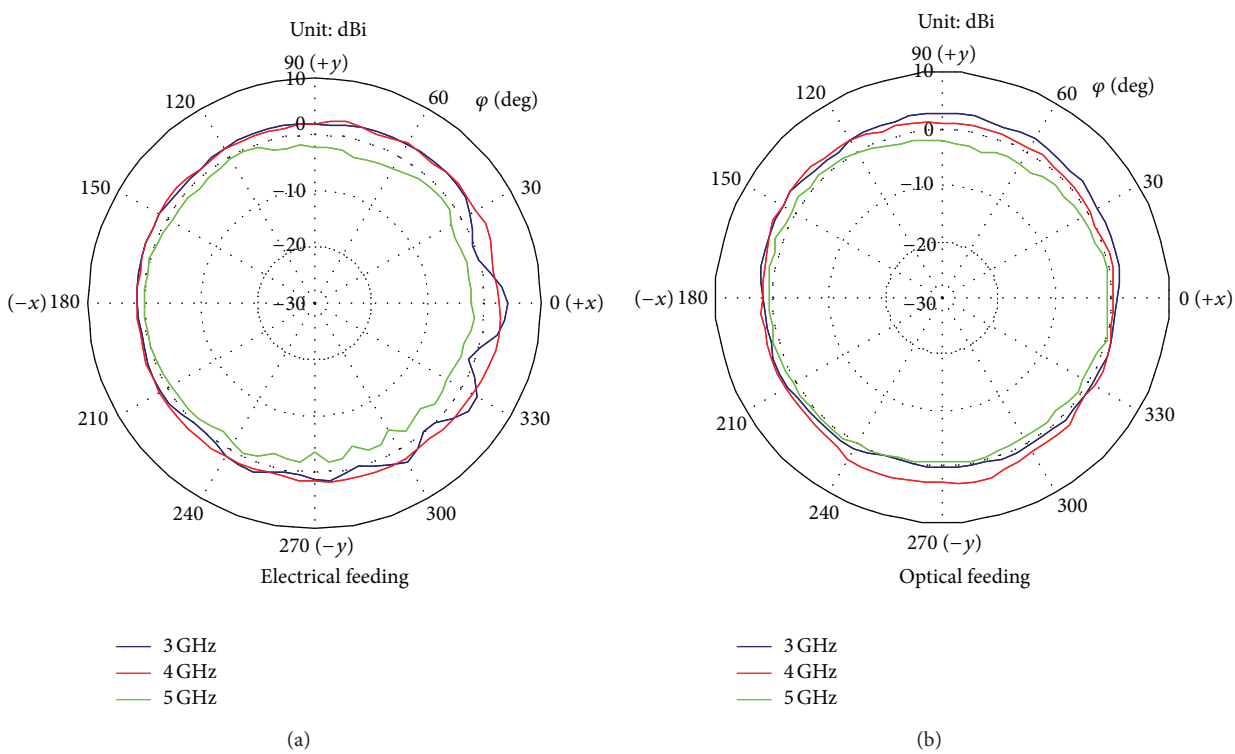

Figure 11: Measured radiation patterns for total field at xy-plane at several frequencies for Wirng A.

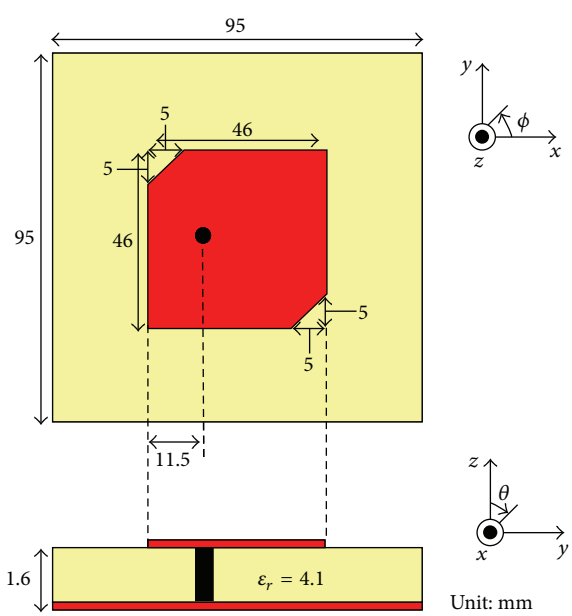

Figure 12: Geometry of CP patch antenna.

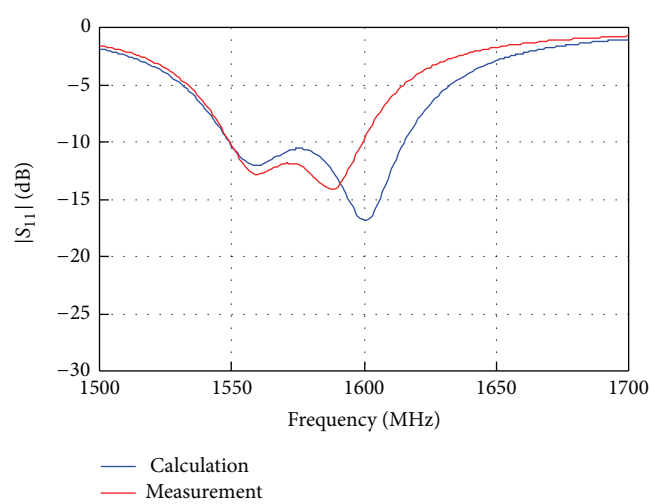

Figure 13: Input characteristics of CP patch antenna.

$\theta = 0$ and $\varphi = 0$ for both the measurements of the electrical and optical feedings as well as the calculation. Reasonable agreements are also obtained between calculated and measured results especially in those of optical feeding.

Figures 15 and 16 show the frequency characteristics of the electric field amplitude ratio of x to y polarizations and the phase difference between x and y polarizations of electric fields at the point of $\theta = 0$ and $\varphi = 0$, respectively. Reasonable agreements are also obtained between calculated and measured results.

4. Conclusion

We have developed a compact and cost-effective radiation measurement system by using the optical feeding. The system

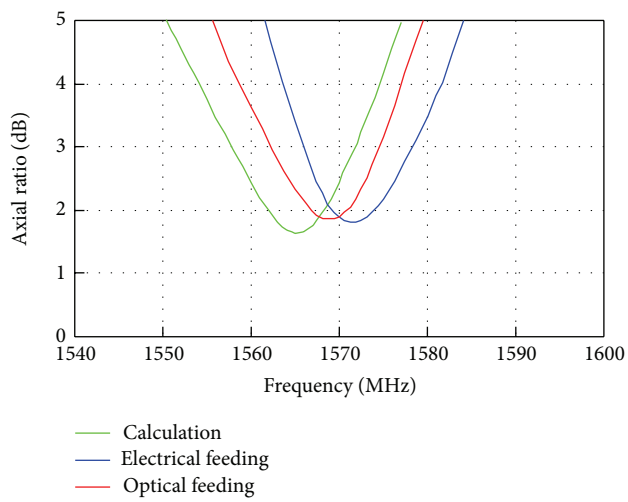

Figure 14: Frequency characteristics of axial ratio.

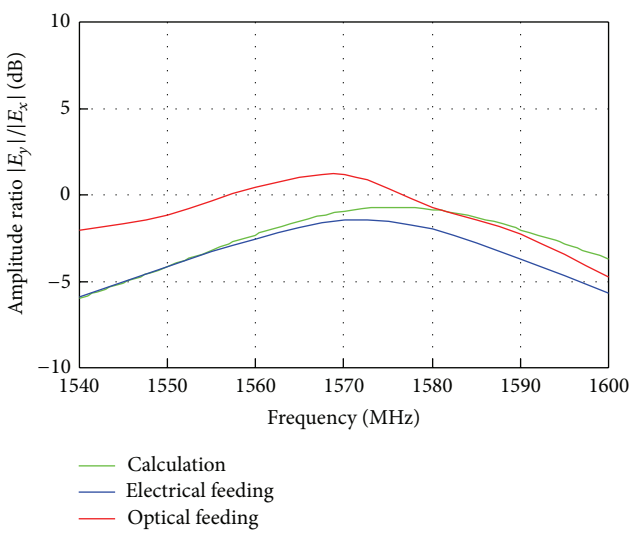

Figure 15: Amplitude ratio for CP patch antenna.

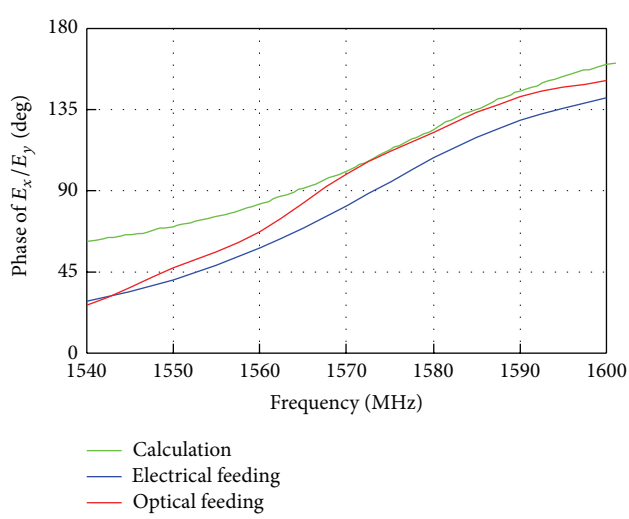

Figure 16: Phase difference for CP patch antenna.

is composed of a VCSEL, a PD and a GI-fiber and provides available measurement up to 6 GHz. It has a compact O/E converter to feed AUT by a micro-coaxial cable. It is demonstrated that the system successfully suppresses unbalanced currents on the feeding line and can be used for precise measurement not only for amplitude but also phase measurements.

References

[1] C. Icheln, J. Ollikainen, and P. Vainikainen, "Reducing the influence of feed cables on small antenna measurements," *Electronics Letters*, vol. 35, no. 15, pp. 1212–1214, 1999.

[2] C. Icheln and P. Vainikainen, "Dual-frequency balun to decrease influence of RF feed cables in small antenna measurements," *Electronics Letters*, vol. 36, no. 21, pp. 1760–1761, 2000.

[3] S. A. Saario, J. W. Lu, and D. V. Thiel, "Full-wave analysis of choking characteristics of sleeve balun on coaxial cables," *Electronics Letters*, vol. 38, no. 7, pp. 304–305, 2002.

[4] P. J. Massey and K. R. Boyle, "Controlling the effects of feed cable in small antenna measurements," in *Proceedings of the 12th International Conference Antennas and Propagat*, vol. 2, pp. 561–564, Exeter, UK, March 2003.

[5] C. Icheln, J. Krogerus, and P. Vainikainen, "Use of balun chokes in small-antenna radiation measurements," *IEEE Transactions on Instrumentation and Measurement*, vol. 53, no. 2, pp. 498–506, 2004.

[6] S. Saario, D. V. Thiel, J. W. Lu, and S. G. O. Keefe, "An assessment of cable radiation effects on mobile communications antenna measurements," in *Proceedings of the IEEE Antennas and Propagation Society International Symposium, Digest*, vol. 1, pp. 550–553, Montreal, Canada, July 1997.

[7] W. A. T. Kotterman, G. F. Pedersen, K. Olesen, and P. Eggers, "Cable-less measurement set-up for wireless handheld terminals," in *Proceedings of the 12th International Symposium on Personal, Indoor and Mobile Radio Communications (PIMRC '01)*, pp. B112–B116, San Diego, Calif, USA, October 2001.

[8] S. Amari, A. Yamamoto, H. Iwai, Y. Koyanagi, and K. Ogawa, "Complex radiation pattern measurement using a optical-fibre cable applicable to a handset adaptive array," in *Proceedings of the International Symposium Antennas and Propagation (ISAP '07)*, pp. 73–76, Niigata, Japan, August 2007.

[9] T. Fukazawa, K. Shimomura, and M. Otsuka, "Accurate measurement method for characteristics of an antenna on a portable telephone," *IEICE Transactions on Communications*, vol. 86, no. 9, pp. 1895–1905.

[10] S. Kurokawa, M. Hirose, and K. Komiyama, "Optical fiber link 1-pass 2-port antenna measurement system," in *Proceedings of the 67th ARFTG Microwave Measurements Conference*, pp. 246–250, San Diego, Calif, USA, June 2006.

[11] R. Lao, W. Liang, Y. S. Chen, and J. H. Tarng, "The use of electro-optical link to reduce the influence of RF cables in antenna measurement," in *Proceedings of the IEEE International Symposium on Microwave, Antenna, Propagation and EMC Technologies for Wireless Communications (MAPE '05)*, vol. 1, pp. 427–430, Beijing, China, August 2005.

[12] I. K. Cho, J. I. Mun, S. M. Kim, and J. H. Yun, "Optical fiber link system for the antenna measurement," in *International Conference on Photonics in Switching (PS '09)*, pp. 1–2, Pisa, Italy, February 2009.

[13] B. Yanakiev, J. O. Nielsen, M. Christensen, and G. F. Pedersen, "Small device for short-range antenna measurements using optics," *IEEE Transactions on Antennas and Propagation*, vol. 53, no. 6, pp. 148–152, 2011.

[14] J. C. Wyss and S. T. Sheeran, "A practical optical modulator and link for antennas," *Journal of Lightwave Technology*, vol. 3, no. 2, pp. 316–321, 1985.

[15] F. Koyama, "Recent advances of VCSEL photonics," *Journal of Lightwave Technology*, vol. 24, no. 12, pp. 4502–4513, 2006.

[16] S. Md. Arefin and T. Mollick, "Analysis of vertical cavity serface emitting laser, resonant cavity enhanced photodetector & their integrated structure," *Engineering and Applied Sciences*, vol. 1, no. 3, pp. 97–104, 2013.

[17] N. Guan, H. Tayama, H. Furuya, D. Delaune, and K. Ito, "A deformed film UWB antenna," *IEICE Transaction on Communications*, vol. 93, no. 10, pp. 2531–2537, 2010.

[18] H. Arai, *Measurement of Mobile Antenna*, Artech House, 2001.

[19] R. F. Harrington, *Field Computation By Moment Methods*, IEEE Press, Piscataway, NJ, USA, 1993.

[20] K. L. Wong, *Compact and Broadband Microstrip Antennas*, John Wiley & Sons, New York, NY, USA, 2002.

[21] F. S. Chang, K. L. Wong, and T. W. Chiou, "Low-cost broadband circularly polarized patch antenna," *IEEE Transactions on Antennas and Propagation*, vol. 51, no. 10, pp. 3006–3009, 2003.

[22] C. T. Rodenbeck, K. Chang, and J. Aubin, "Automated pattern measurement for circularly-polarized antennas using the phase-amplitude method," *Microwave Journal*, vol. 47, no. 7, pp. 68–78, 2004.

[23] G. E. Evans, *Antenna Measurement Techniques*, Artech House, Boston, Mass, USA, 1990.