Hindawi
International Journal of Optics
Volume 2023, Article ID 8192632, 8 pages
https://doi.org/10.1155/2023/8192632

Research Article

Frequency Scanning Multibeamforming Method Based on CFBG Photonic Microwave Oscillation

Ning Mu,[1] **Hongxia Guo**,[2] **and Wanrong Gao**[2]

[1]*School of IOT Technology, Wuxi Institute of Technology, Wuxi 214121, China*
[2]*School of Electronic and Optical Engineering, Nanjing University of Science and Technology, Nanjing 210094, China*

Correspondence should be addressed to Ning Mu; mu.ning@139.com

Received 9 January 2023; Revised 3 March 2023; Accepted 4 March 2023; Published 21 March 2023

Academic Editor: Li-Ming Si

In this paper, a two-loop photoelectric oscillator based on chirped fiber Bragg grating (CFBG) is used to construct a swept source, which acts on the frequency scanning array antenna to realise multibeamforming. The simulation results of the designed beamforming system have shown that it can realise wide-range beam scanning and has ultralow phase noise.

1. Introduction

Beamforming is one of the key technologies for radar systems. The principle of phased array antenna to realise beam scanning relies on the phase shift between different signals arriving at each radiating elements [1]. There are two major electrical signal delay devices: one is to use metal wires, and the delay is adjusted by controlling the length of the wires; the other is to use phase shifters, and the wavefront control is realised by regulating the phase of different units. The disadvantages of metal wires are bulky volume, heavy weight, and susceptibility to electromagnetic interference. Phase shifters are only suitable for narrow bands [2]. For large instantaneous bandwidth, the "squint" phenomenon makes it difficult to meet the demand of modern radar systems. In order to realise wideband angular scanning of phased-array radars, true time delay (TDD) could be used instead of phase shift to achieve precise control of time delay in broadband scenario [3].

With the development of microwave photonic technology, especially optical true time delay (OTTD) technology, the performance of phased-array radar has been further improved [4]. The basic principle of OTTD is to convert the microwave signal into an optical signal by a photoelectric modulator, and then use the optical method to control the delay, and finally use a photoelectric conversion device to restore the microwave signal. Compared with the electrical phase shifters, OTTD technology has the advantages such as wideband, stable transmission, light weight, and no radiation interference [5].

Optically controlled beamforming has become a hot topic in the recent years. The optical time delay based on wavelength tuning and dispersive element helps to improve the processing bandwidth and scanning accuracy. In the beamforming system based on fiber dispersion, the OTTD is realised by changing the output wavelength of the laser device. The OTTD technologies realise the optically controlled beamforming for phased array antennas. However the introduction of the OTTD devices results in a large insertion loss [6]. In addition, due to the complexity of the system, and the optoelectronic integration technology is relatively preliminary compared to electrical integration, the current application scope is limited.

The frequency scanning array antenna is a special case of series-fed phased array antennas, where beam steering is controlled by tuning the frequency of the exciter [7]. For the frequency scanning array antenna, the transmission line of a certain length is used to replace the phase shifter, so the insertion loss is relatively small. The frequency band generated by the traditional frequency source is relatively narrow, and the range of beam scanning is therefore limited.

The aim of this paper is to propose a beamforming system based on photonic microwave frequency step scanning. The microwave photonic oscillation and CFBG tuning have been adopted in the system. The system can realise wide range of beam scanning and has ultralow phase noise, and it has the advantages such as less control elements, continuously adjustable frequency, compact size, and low cost.

2. Frequency Scanning Beamforming Principle

The traditional phased array antenna beamforming is achieved by adjusting the amplitude and phase excitation of each antenna element through an electric phase shifter. A schematic diagram of the phased array antenna with N elements is shown in Figure 1.

From Figure 2, the pattern of the phased array antenna can be expressed as

$$\mathrm{F}(\theta) = \sum_{i=0}^{N-1} a_i \exp\left[ji\left(\frac{2\pi}{\lambda} d \sin\theta - \Delta\phi_B\right)\right], \quad (1)$$

where λ is the wavelength in free space, d is the spacing of adjacent elements, θ is the exit angle of the beam, $\Delta\phi_B$ is the phase difference between adjacent elements, and j is the imaginary unit.

The frequency scanning array antenna uses the transmission lines to replace the shifters, as shown in Figure 2.

The phase difference $\Delta\phi_B$ between adjacent elements could be expressed as

$$\Delta\phi_B = \frac{2\pi L}{\lambda_g}, \quad (2)$$

where λ_g is the wavelength of the radio wave in the transmission line and L is the length of transmission line between adjacent elements.

The pattern of the phased array antenna in (1) can be rewritten as

$$\mathrm{F}(\theta) = \sum_{i=0}^{N-1} a_i \exp\left[ji\left(\frac{2\pi}{\lambda} d \sin\theta - \frac{2\pi L}{\lambda_g}\right)\right]. \quad (3)$$

For a frequency scanning array antenna, the beam direction changes in accordance with the frequency of the excitation signal. In the following section, a CFBG-based frequency scanning beamforming system is presented with detailed simulation analysis.

3. CFBG-Based Frequency Scanning Beamforming System

3.1. System Composition. A low-loss, high-efficiency frequency scanning beamforming system based on microwave photonics is designed. The system design block diagram is shown in Figure 3.

The frequency source (inside the dashed boxed) is given by a CFBG-based two-loop photoelectric oscillator [8], which is mainly composed of a light source, a polarizer, a polarization combiner, single mode fibers, a photodiode,

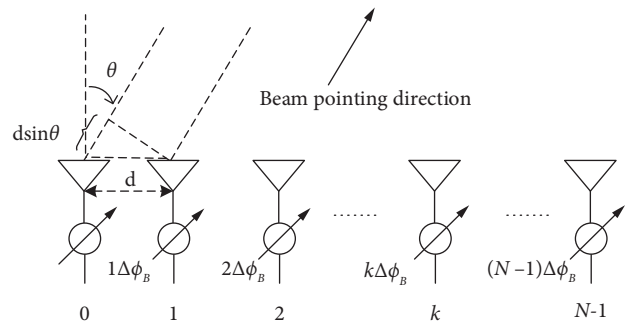

Figure 1: Schematic diagram of phased array antenna beamforming.

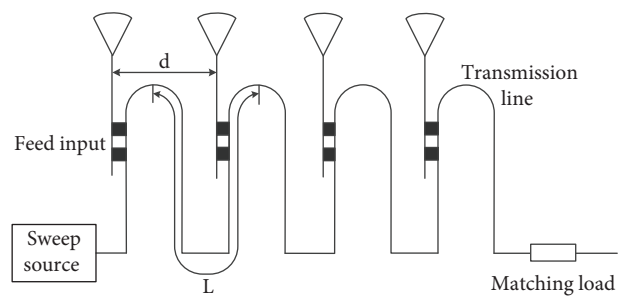

Figure 2: Frequency scanning array.

a radio frequency amplifier, a chirped grating, and a Mach–Zehnder external modulator (MZM) [9–13]. The tuneable photoelectric oscillator can be tuned by using a chirped fiber Bragg grating (CFBG) as a photonic filter to select the frequency of the oscillation mode [14–16]. The carrier signal f_0 provided by the laser source is input to the modulator. A signal with frequency f is obtained at the output end. By reasonably designing τ_1 and τ_2, the phase noise generated by the excitation signal at the offset center frequency of 10 kHz can reach about −140.5 dBc/Hz [8], compared to −105 dBc/Hz with the conventional phase-locking technique. By adjusting the dispersion characteristic of the chirped grating, the oscillation frequency of the photon RF oscillator could be changed.

In the system, the optical carrier output by the light source is modulated by the MZM to produce two or more optical waves of different frequencies at the output of the modulator. The output of the modulator could be expressed as follows [17]:

$$E_{out}(t) = E_0 \left\{ \cos\left[\omega_0 t + \left(\frac{V_{dc}}{V_\pi}\right)\pi + \left(\frac{V_{ac}}{V_\pi}\right)\cos\omega t\right] + \cos\left[\omega_0 t + \left(\frac{V_{ac}}{V_\pi}\right)\pi\cos(\omega t + \Delta\theta)\right]\right\}, \quad (4)$$

where ω_0 represents the angular frequency of laser carrier, ω represents the angular frequency of RF modulated wave, E_0 is the amplitude, V_{ac} is the amplitude of the AC drive voltage, V_{dc} is the DC offset voltage, V_π is the half wave voltage of the modulator, and $\Delta\theta$ is the phase difference

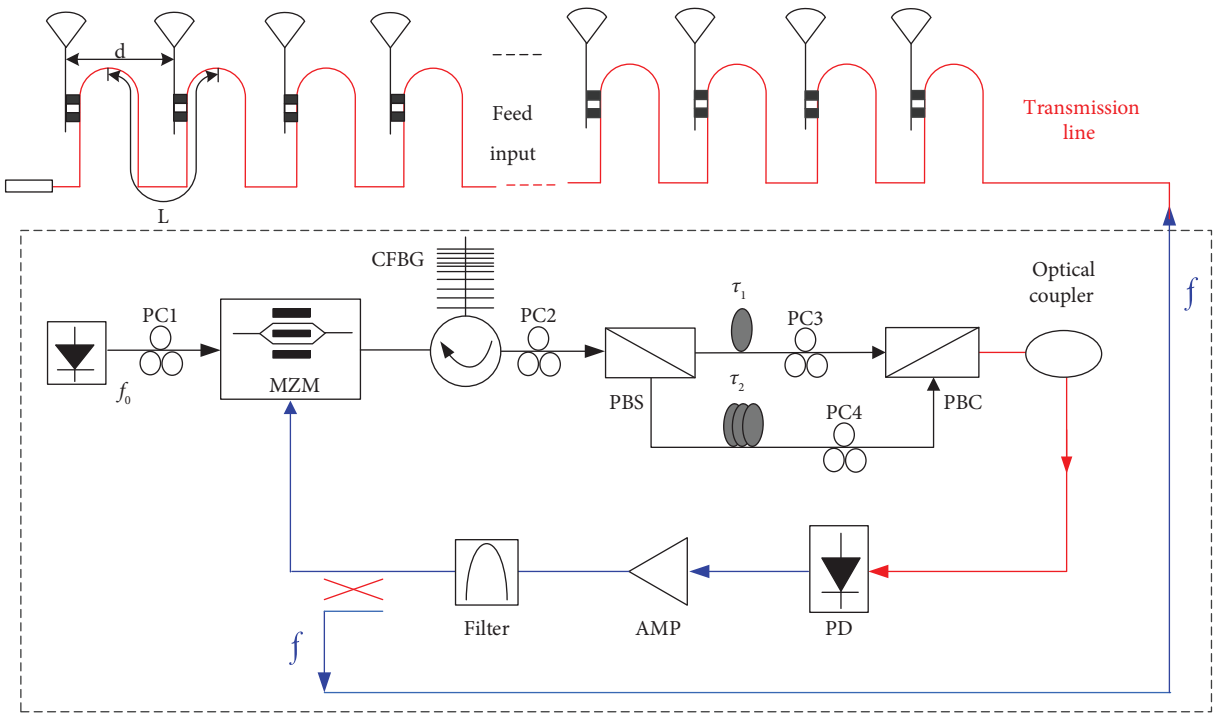

Figure 3: CFBG-based frequency scanning beamforming system.

between two AC voltages. The output signal of the modulator goes through the fiber delay line and arrives at the coupler. One signal is converted into RF signal by the photoelectric converter, and fed back to the modulator after the amplifier and filter. A sufficient positive feedback could maintain the self-oscillation of the loop. The oscillation signal of the photon microwave oscillation loop could be expressed as [17]

$$V_{\text{out}}(t) = V_{ph}\left\{1 - \eta \sin\left(\frac{\pi V_B}{V_\pi}\right)\left[J_0\left(\frac{\pi V_0}{V_\pi}\right) + 2\sum_{m=1}^{\infty} J_{2m}\left(\frac{\pi V_0}{V_\pi}\right)\cos(2m\omega t + 2m\beta)\right] - \right.$$
$$\left. -2\eta\cos\left(\frac{\pi V_B}{V_\pi}\right)\sum_{m=1}^{\infty} J_{2m+1}\left(\frac{\pi V_0}{V_\pi}\right)\sin\left[(2m+1)\omega t + (2m+1)\beta\right]\right\}, \tag{5}$$

where η is the degree of unbalance of the MZM, β is the phase modulation coefficient, V_B is the bias voltage of the modulator, V_π is the half wave voltage of the modulator, V_0 is a constant bias voltage without charge, and V_{Ph} is the amplitude of the oscillation signal. J_0 and J_{2m} are Bessel functions.

In the system, the chirped grating is connected to the photoelectric oscillator to form a photon filter. The frequency of the oscillation mode could be selected to achieve frequency adjustment. The frequency response of the photon filter corresponding to the grating is given as [16, 17]

$$H(f) \propto \sqrt{1+\alpha^2}\cos\left[\frac{\pi D\lambda_0{}^2 f^2}{c} + \arctan(\alpha)\right]. \tag{6}$$

In (6), $\alpha = \tan(\pi/2V_B - V_0 - V_\pi/V_\pi)$, λ_0 represents the wavelength of the laser source, c is the speed of light, and D represents the grating dispersion value. When the system satisfies

$$\frac{\pi D\lambda_0{}^2 f^2}{c} + \frac{\pi}{2}\frac{V_B - V_0 - V_\pi}{V_\pi} = k\pi \quad \text{k} = 0, 1, 2\cdots, \tag{7}$$

extreme value will occur, and the frequency of peak point is

$$f_p = \sqrt{\frac{(-(\pi/2)(V_B - V_0 - V_\pi/V_\pi) + k\pi)c}{(\pi D\lambda_0{}^2)}}, \text{k} = 0, 1, 2\cdots. \tag{8}$$

According to (8), the central frequency of photoelectric oscillation is determined by three parameters: wavelength of light source, grating dispersion, and bias voltage. The dispersion characteristic of the grating can be adjusted to achieve large-bandwidth frequency tuning, thereby realizing large-scale scanning of the antenna beam.

3.2. Simulation Analysis. The simulation analysis of CFBG-based frequency scanning beamforming system in X band is presented in this section.

The spectrum generated by the CFBG-based frequency scanning source is shown in Figure 4, where the dispersion value $D = 850$ ps/nm, the light source wavelength $\lambda_0 = 1550$nm, the bias voltage $V_B = 2.4V$, and the fiber length is 0.6 km and 1.6 km, respectively. It can be seen that the oscillation frequency of the two-loop photoelectric oscillator is stabilized at 10.9 GHz, and the edge touch suppression reaches 75 dB. As shown in Figure 5, the phase noise can reach −132 dBc/Hz@10 kHz.

When the CFBG dispersion parameter changes in the swept source, the beam pointing angle changes accordingly. As shown in Figure 6, when the source oscillation frequency f_g is stabilized at 10 GHz, the beam is directed to the normal direction. When it is stable at 10.9 Hz, the beam pointing angle is $\theta_B = 10.4^\circ$.

The oscillation frequency of the two-loop photoelectric oscillator varies with the grating dispersion value. The variation curve of the oscillation frequency with the dispersion value in the X-band is displayed in Figure 7. It can be seen that the grating dispersion value and the oscillation frequency are almost linearly related in the X-band, and the oscillation frequency gradually decreases as the value of the grating increases.

Adjust the dispersion value in the step of 100 ps/nm to obtain different oscillation frequencies in the X-band range and to obtain continuous beam scanning. The simulation results are shown in Figures 8 and 9. It can be seen that the designed CFBG-based frequency scanning beamforming system can achieve continuous beam scanning within ±30°.

3.3. Multibeamforming System. The frequency scanning beamforming system constructed in the abovementioned sections applies to point-frequency or narrow-band systems. In practice where multibeam search and precise positioning are required, a two-plane scanning structure can be adopted, as shown in Figure 10. The second plane is added to the frequency scanning system. In the designed system, n frequency swept subarrays are used to implement n beams in space. Multibeam formation at different locations can be achieved by adjusting the length of the transmission line between the subarrays. The system enables full-scale, wide-range scanning of the beam.

3.4. Simulation Analysis. In order to achieve spatial 4-beam scanning, that is, $n = 4$ in Figure 10, use different lengths for transmission lines between adjacent subarrays. Take $L_1 = 0.03$ m, $L_2 = 0.05$ m, $L_3 = 0.06$ m, and $L_4 = 0.08$ m. When the output frequency of the swept source is stabilized at 10.9 GHz, the four beams generated are shown in Figure 11.

With the change in the fiber Bragg grating dispersion value, the two-loop photoelectric oscillator will generate different frequency output signals to act on the frequency scanning array, which can realise the synchronous scanning of spatial 4-beams. When the CFBG dispersion value of the swept source frequency changes from 850 ps/nm to 900 ps/nm, the simulation result diagram of the 4-beams is shown in Figure 12. It can be seen that the beams are deflected with the change of the swept source frequency.

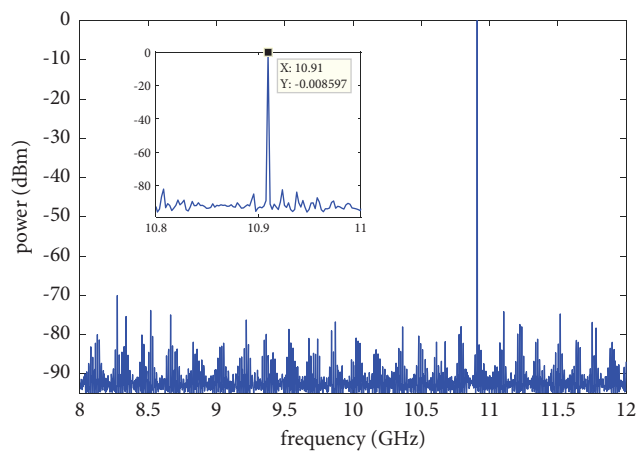

Figure 4: Frequency scanning source single-frequency spectrum.

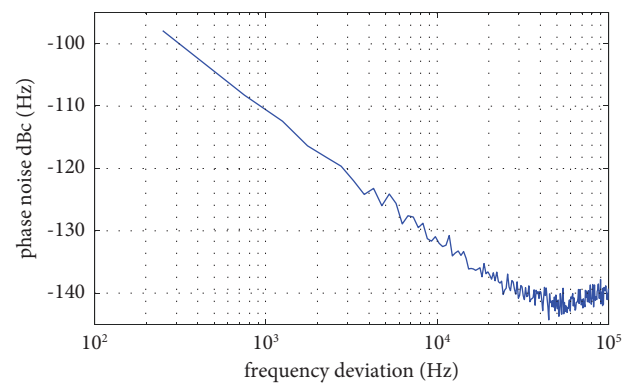

Figure 5: Frequency scanning source single-frequency signal phase noise (output frequency is 10.9 GHz).

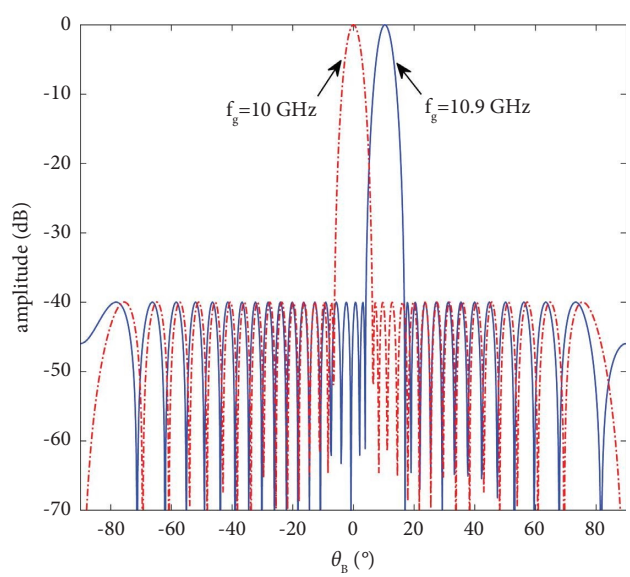

Figure 6: Beam pattern of the frequency scanning array antenna.

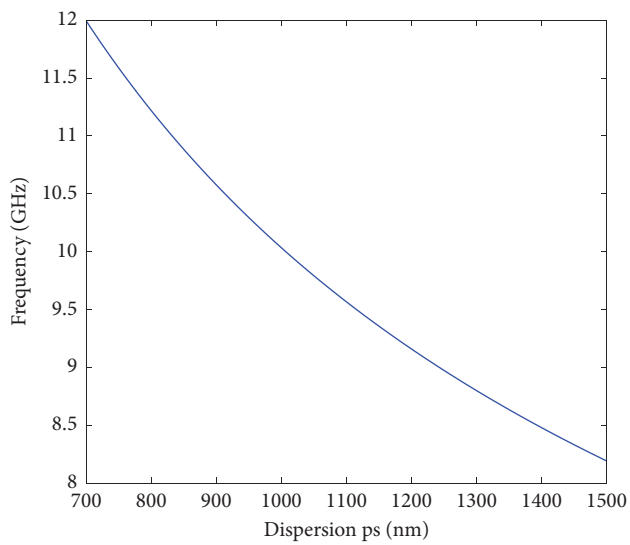

Figure 7: Curve of frequency with grating dispersion value.

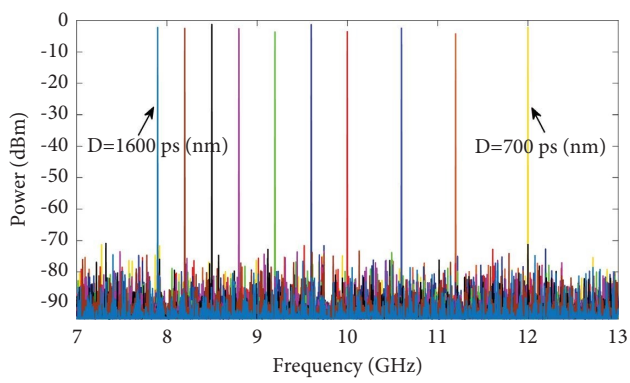

Figure 8: Fiber grating dispersion characteristics of the source.

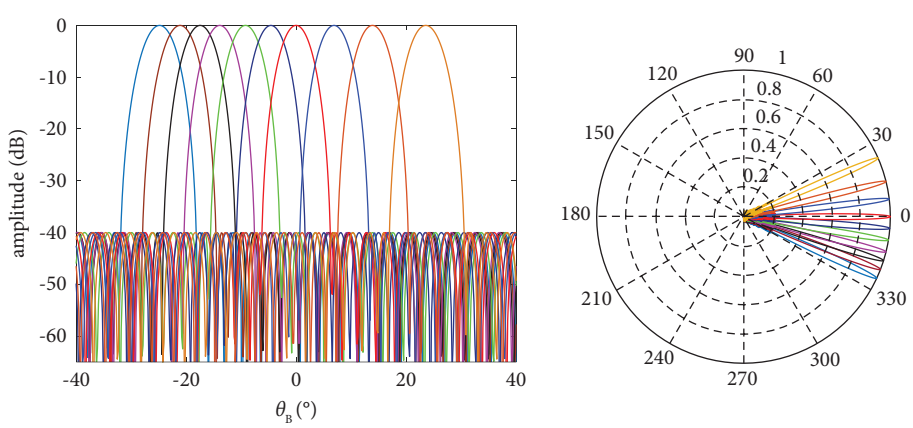

Figure 9: Frequency scanning beamforming system simulation diagram.

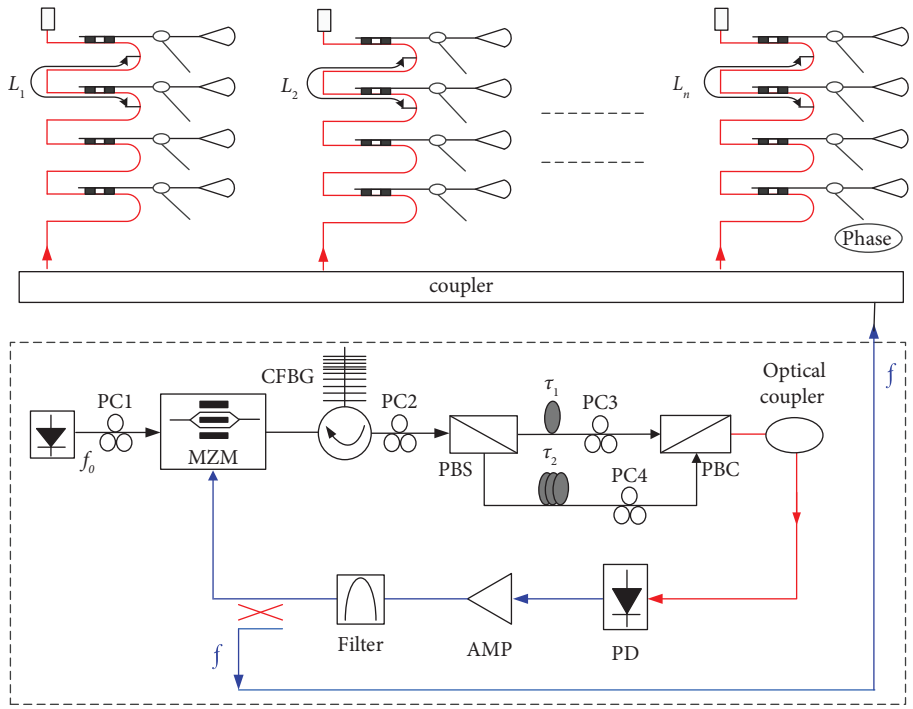

Figure 10: Two-plane multibeamforming system composition diagram.

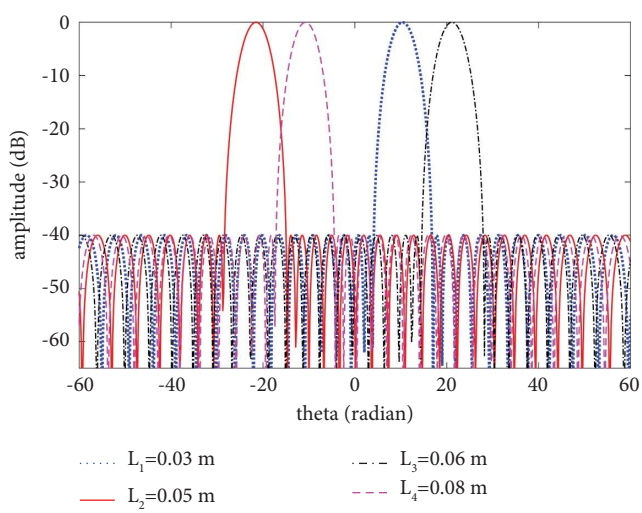

Figure 11: 4-beamforming scanning.

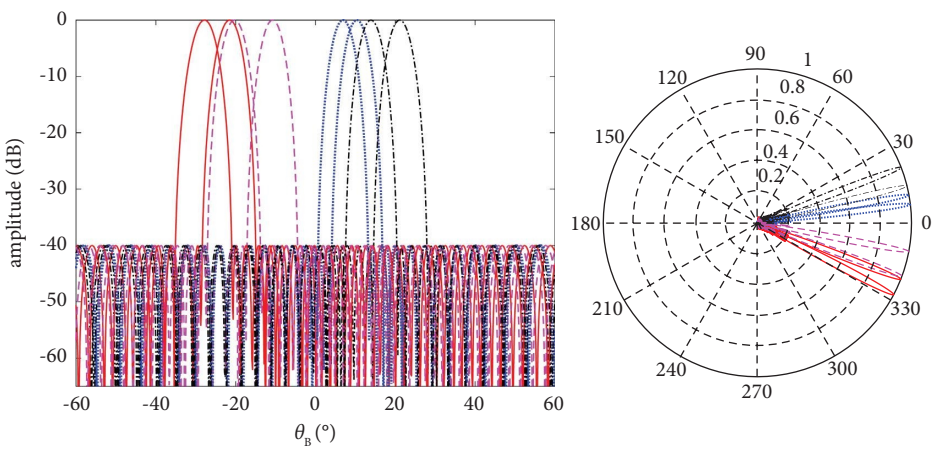

Figure 12: Deflection of 4-beams.

4. Conclusions

In this paper, the CFBG-based two-loop photoelectric oscillator is used to construct a swept source, which can obtain high-quality, low-phase-frequency shift spectrum. The swept source is applied to the frequency scanning system to obtain multibeamforming scanning. The detailed design structure and implementation method are given. The simulation results have shown that large scale continuous beam scanning could be obtained. The system has ultralow phase noise and advantages such as less control elements, continuously adjustable frequency, compact size, and low cost.

Data Availability

The data used to support the findings of this study are available from the authors upon reasonable request.

Conflicts of Interest

The authors declare that there are no conflicts of interest regarding the publication of this paper.

Acknowledgments

This research was funded by the Natural Science Foundation of China (NSFC) (61275198 and 60978069), the key special projects of "Major Scientific Instruments and Equipment Development" of the National Key Research and Development Plan, Ministry of Science and Technology, P. R. China (2017YFF0107100), and Future Networks Innovation Institution and Chinese Ministry of Education (2021FNB01004).

References

[1] S. Pan and Y. Zhang, "Microwave photonic radar and key technologies," *Science and Technology Review*, vol. 35, no. 20, pp. 36–52, 2017.

[2] X. Cheng, W. Qiu, P. Min, and J. Zhang, "A wide band optically controlled phase array antenna beam-steering by wavelength switching," in *Proceedings of the 2015 IEEE 14th International Conference on Optical Communications and Networks (ICOCN)*, Nanjing, China, July 2015.

[3] H. Subbaraman, M. Y. Chen, and R. T. Chen, "Photonic crystal fiber-based true-time-delay beamformer for multiple RF beam transmission and reception of an X-band phased-array antenna," *Journal of Lightwave Technology*, vol. 26, no. 15, pp. 2803–2809, 2008.

[4] S. Galli, G. J. Schneider, S. Shi et al., "A novel opto-electronic architecture for large multi-band and multi-beam phased arrays," in *Proceedings of the 2019 IEEE Wireless Communications and Networking Conference (WCNC)*, Marrakesh, Morocco, April 2019.

[5] T. Akiyama, H. Matsuzawa, K. Sakai, S. Itakura, and Y. Hirano, "Multiple-beam optically controlled beamformer using spatial-and-wavelength division multiplexing," in *Proceedings of the IEEE 2009 International Topical Meeting on Microwave Photonics*, Valencia, Spain, October 2009.

[6] M. Tur, "True time delay photonic beamforming: a review," in *Proceedings of the 2009 IEEE International Conference on Microwaves, Communications, Antennas and Electronics Systems*, Columbus, OH, USA, July 2009.

[7] S. Karimkashi, G. Zhang, R. Kelley et al., "Cylindrical polarimetric phased array radar demonstrator: design and analysis of a frequency scanning antenna array," in *Proceedings of the 2013 IEEE International Symposium on Phased Array Systems and Technology*, Waltham, MA, USA, October 2013.

[8] N. Mu, H. X. Guo, and W. R. Gao, "A study on tunable spectral frequency shift method with low phase noise," *Optoelectronics Letters*, vol. 15, no. 3, pp. 204–208, 2019.

[9] T. Zhang, J. Xiong, P. Wang et al., "Tunable optoelectronic oscillator using FWM dynamics of an optical-injected DFB laser," *IEEE Photonics Technology Letters*, vol. 27, no. 12, pp. 1313–1316, 2015.

[10] C. Li, F. Chen, and J. Zhang, "Tunable optoelectronic oscillator incorporating a carrier phase-shifted double sideband modulation system," *Optics & Laser Technology*, vol. 76, pp. 138–142, 2016.

[11] Z. Wei, R. Wang, T. Pu, G. Sun, T. Fang, and J. Zheng, "A tunable optoelectronic oscillator based on a tunable microwave attenuator," *Optical Fiber Technology*, vol. 19, no. 5, pp. 383–386, 2013.

[12] C. Li, F. Chen, K. Chen, J. Zhang, and J. Mao, "Dual-tuned optoelectronic oscillator based on variable laser source and

chirped M-Z modulator," *Semiconductor Optoelectronics*, vol. 35, no. 6, pp. 987–991, 2014.

[13] Z. Wei, S. Pan, R. Wang et al., "Tunable optoelectronic oscillator based on a chirped Mach-Zehnder modulator," *Optical Engineering*, vol. 52, no. 5, Article ID 55005, 2013.

[14] Z. Tang, S. Pan, D. Zhu et al., "Tunable optoelectronic oscillator based on a polarization modulator and a chirped FBG," *IEEE Photonics Technology Letters*, vol. 24, no. 17, pp. 1487–1489, 2012.

[15] X. Yao and L. Maleki, "Opto-electronic oscillator for photonic systems," *IEEE Journal of Quantum Electronics*, vol. 32, no. 7, pp. 1141–1149, 1996.

[16] W. Zhai and Y. Xin, "Broadband microwave photonic phase shifter based on PM and CFBG," *Optical Communication Technology*, vol. 3, pp. 40–43, 2019.

[17] T. Pu, C. Wen, and P. Xiang, *Principles and Applications of Microwave Photonics*, Electronic Industry Press, Nanjing, China, 1 edition, 2015.