Hindawi
International Journal of Photoenergy
Volume 2022, Article ID 9625564, 9 pages
https://doi.org/10.1155/2022/9625564

Research Article

Design and Analysis of ANFIS – Based MPPT Method for Solar Photovoltaic Applications

S. R. Revathy,[1] V. Kirubakaran,[1] M. Rajeshwaran,[2] T. Balasundaram,[3] V. S. Chandra Sekar,[4] Saad Alghamdi,[5] Bodour S. Rajab,[5] Ahmad O. Babalghith,[6] and Endalkachew Mergia Anbese[7]

[1]*Centre for Rural Energy, The Gandhigram Rural Institute-Deemed to Be University, Gandhigram, 624302 Tamil Nadu, India*
[2]*Department of Mechanical Engineering, Mother Terasa College of Engineering and Technology, Pudukkottai, 622102 Tamil Nadu, India*
[3]*Department of Mechanical Engineering, Medak College of Engineering and Technology, Siddipet, Telangana, India*
[4]*Department of Mechanical Engineering, University College of Engineering Dindigul, Dindigul, 624622 Tamil Nadu, India*
[5]*Laboratory Medicine Department, Faculty of Applied Medical Sciences, Umm Al-Qura University, Makkah, Saudi Arabia*
[6]*Medical Genetics Department, College of Medicine, Umm Al-Qura University, Makkah, Saudi Arabia*
[7]*Department of Civil Engineering, Ambo University, Ambo, Ethiopia*

Correspondence should be addressed to Endalkachew Mergia Anbese; endalkachew.mergia@ambou.edu.et

Received 9 February 2022; Accepted 31 March 2022; Published 19 May 2022

Academic Editor: Palanivel Velmurugan

The solar photovoltaic energy is becoming popular in the modern-day distribution networks due to the clean energy factor. The photovoltaic modules exhibit a nonlinearity in the output power concerning the environmental conditions. This work suggests an adaptive neuro-fuzzy inference system- (ANFIS-) based maximal power point tracker (MPPT) for the optimization of the solar photovoltaic system (SPVS). The controller modelled is utilized to optimize the output power of a DC-DC converter connected to a 400 W PV array. The entire model is analysed employing MATLAB/SIMULINK using primary features provided by the technical data. The behavior of the controller modelled is tested for various weather conditions and partial shading conditions. The findings show the controller's tracking speed effectiveness and dynamic response in PSCs.

1. Introduction

The solar photovoltaic modules depend on irradiance and temperature for the power generation, but these two factors vary with varying atmospheric conditions like weather, climate, and seasons. Other conditions like partial shading due to cloud cover, nearby trees, buildings, and dust also have adverse effects on PV-based power generation [1–3]. This introduces the need for power optimization in solar photovoltaic power generation, which will keep track of the maximum power point and optimize the power accordingly. A maximum power point tracker can be defined as a technique employed in renewable energy-based power generation units like solar photovoltaic or wind turbines to extract maximum power output at uncertain conditions [4, 5].

The commonly used maximum power point tracking methods like hill climbing methods (perturb and observe method and incremental conductance method) have more and recurrent oscillations around the maximum power value tracked. Hence, they are inaccurate in foreseeing the MPP during adverse atmospheric conditions. However, they are easy to design and implement. These techniques involve less hardware, and hence, they are highly cost effective. [6, 7].

Artificial neural networks employ learning based on the behavioral or operational pattern of the concerned application, which enables speed and independence over the applications where it is employed. ANN-based MPP tracking gives good outputs in ordinary environmental occasions but is unable to follow MPP in shading conditions [8]. The training method has a significant impact on its performance.

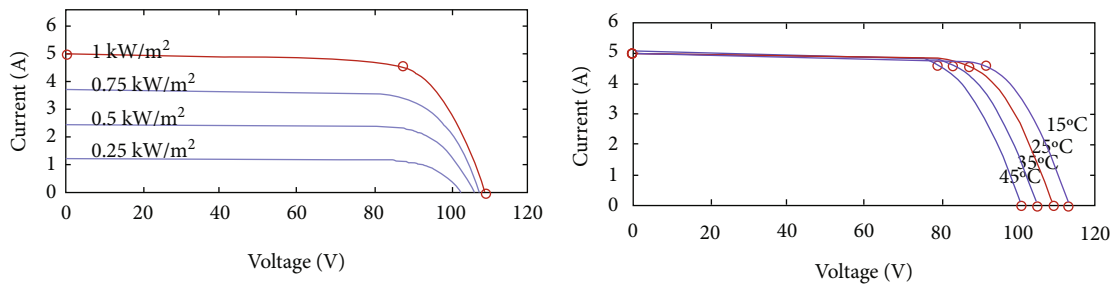

(a) V-I characteristics for various irradiances (b) V-I characteristics for various temperatures

Figure 1: V-I characteristics of the PV array.

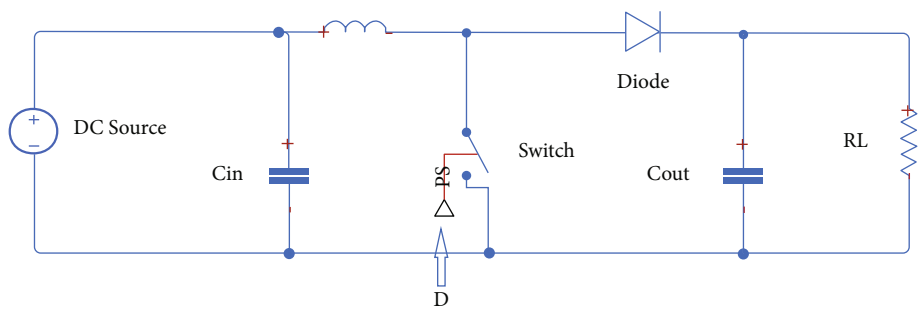

Figure 2: Boost converter.

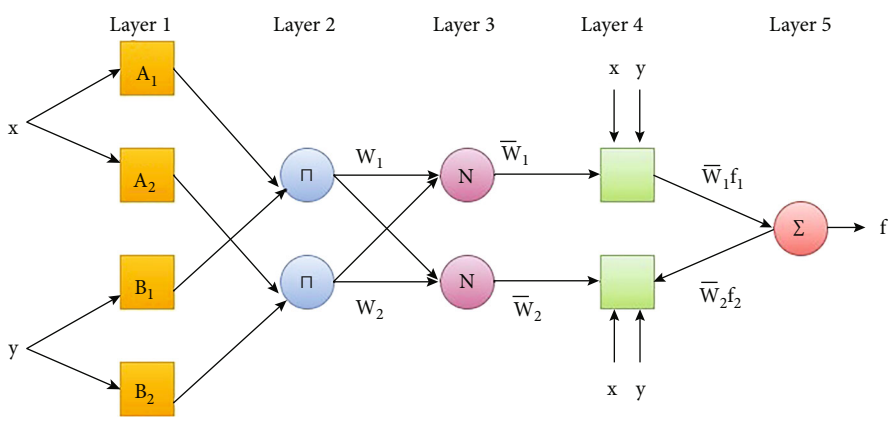

Figure 3: Architecture of an ANFIS.

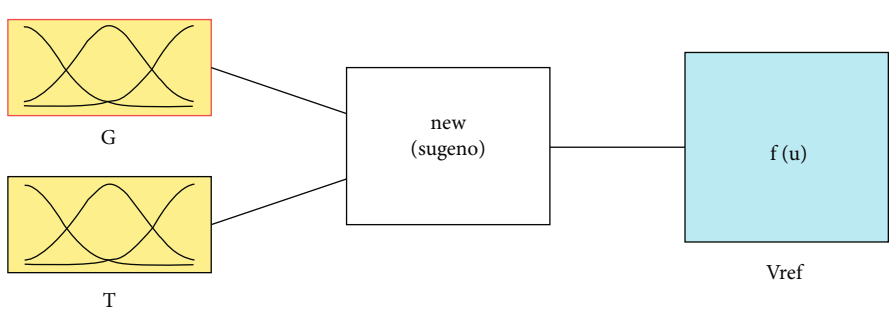

Figure 4: Proposed ANFIS MPPT model.

ANN trained for a specific capacity of the PV system is not employable again, and this makes it exclusive and unsalable. Also, periodic tuning of the nodes is required to keep up with the present operating conditions of the PV system as it ages with time [9]. Fuzzy-based MPPTs show better performance as given in Section 1. However, designing the

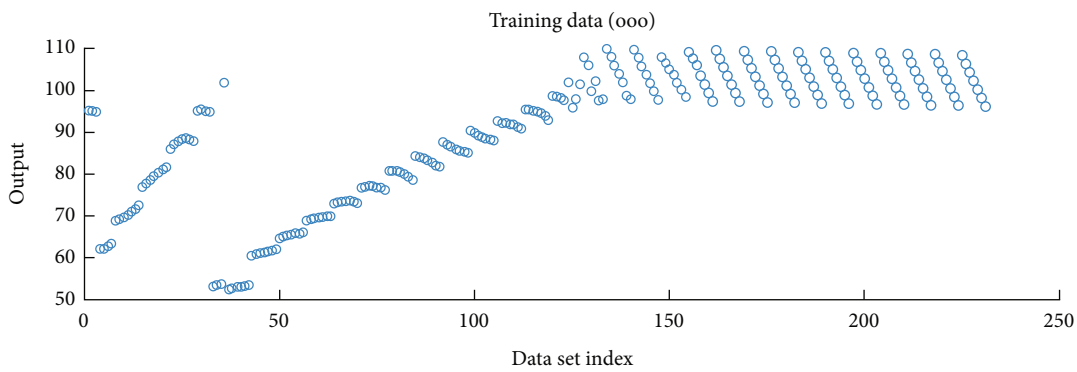

Figure 5: Training datasets.

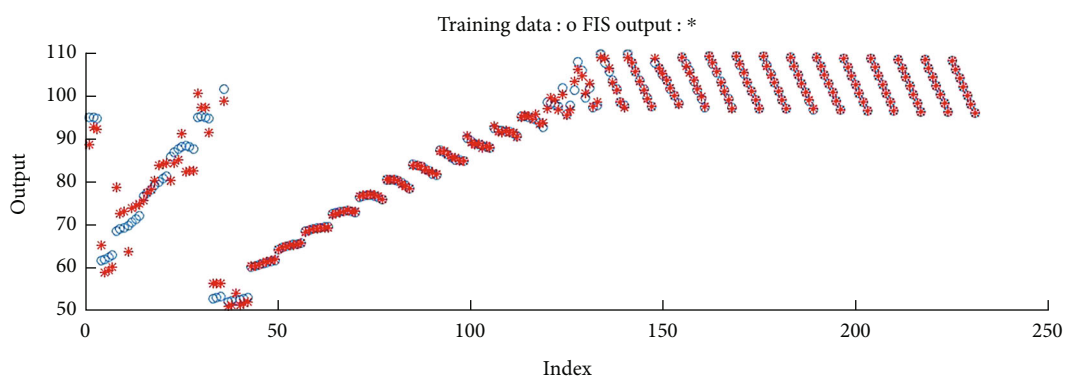

Figure 6: Training output.

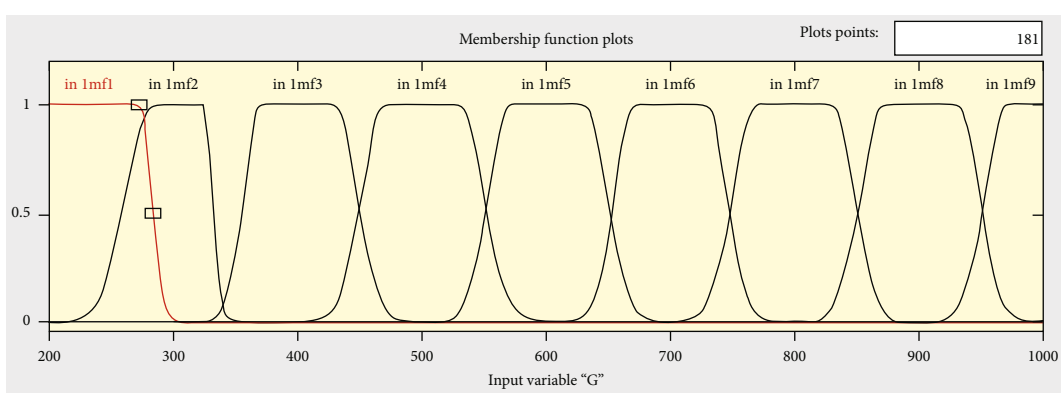

Figure 7: Membership functions of input G.

membership functions and the rules are a complex process. Also, the precision of the entire system depends on this design; any manual flaw can affect the output. But in the case of the ANFIS controller, all the MFs and rules were based on the data obtained from the specifications of the PV array. So, it increases the accuracy and eliminates the complexity in the design.

The ANFIS controller combines the merits of neural networks and fuzzy logic together. These controllers exhibit fast response with good efficiency at all weather conditions making it more suitable for nonlinear systems like SPV modules. The rules and the membership functions for the ANFIS controller are autodesigned through the learning/training process, which brings down the design complexity in the fuzzy controller [10–13]. Solar PV modules function by converting the light energy in the photons into electrical energy, so irradiance is an unrulable input. The performance of the solar modules is affected by the operating temperature. Since humidity and wind velocity influences the temperature, there is no need for additional emphasis on it.

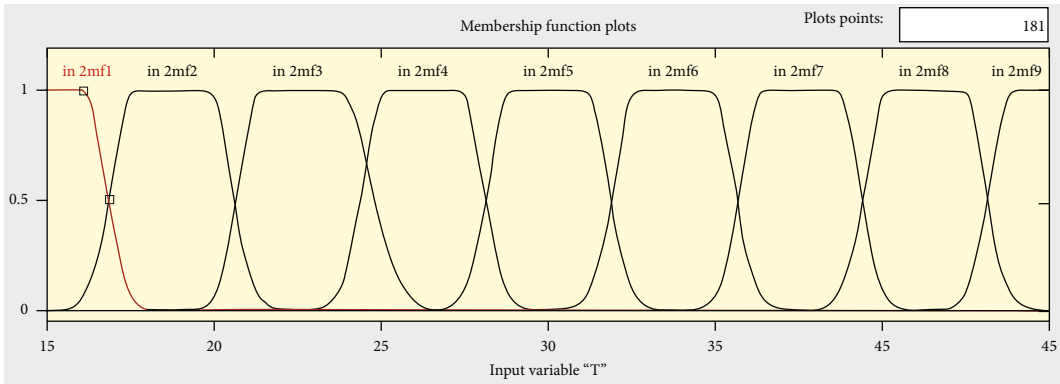

Figure 8: Membership functions of input T.

2. Modelling of the Solar Photovoltaic System

The solar module can be expressed as a mathematical equation as in equation (1). The current of the photovoltaic module under uniform irradiance is derived from equation (1).

$$I = N_p I_{ph} - N_p I_o \left[\exp\left\{ \frac{q\left(V_{pv} + I_{pv} R_s\right)}{N_s A K T} \right\} - 1 \right], \quad (1)$$

where I_{ph} is the photocurrent of the module, N_p is the number of parallel module connections, N_s is the number of series module connections, I_o is the diode saturation current, k is the Boltzmann constant, q is the elementary charge of electron, A is the quality factor of the diode, R_s is the series resistance, V_{pv} is the module voltage, and I_{pv} is the current. The solar array designed for the study has five Canadian Solar CS5C-80M modules serially connected. The maximum power of a single module is 80.15 W with an open-circuit voltage (V_{oc}) of 21.8 V and a short-circuit current (I_{sc}) of 4.97 A. The voltage-current characteristics of the designed array under various irradiances and various temperatures are given in Figure 1.

2.1. Boost Converter. The boost converter is a DC-DC converter used to increase the DC voltage produced by the solar PV array. The circuit of the boost converter is given in Figure 2.

The rate of conversion is usually determined by duty cycle D. It is obtained on the basis of maximum power value tracked by the MPPT. The connection among the input voltage V_i, output voltage V_o, and the duty cycle D of the boost converter is given in equation (2).

$$\frac{V_o}{V_i} = \frac{1}{1-D}. \quad (2)$$

The optimum D value to remove the mismatch among the resistance of PV module R_{PV} and load resistance R_L is given in equation (3).

$$R_{PV} = R_L (1-D)^2. \quad (3)$$

The inductor value in the T_{ON} state is given in equation (4).

$$L = \frac{VD}{\Delta I_L F}. \quad (4)$$

The boost converter performs better in the continuous conduction mode $\Delta I_L \geq 2 I_i$, so equation (4) becomes

$$L \geq \frac{D(1-D)^2 R_L}{2F}. \quad (5)$$

The value of the output capacitor in the TON state is given in equation (6).

$$C_O = \frac{D I_o}{\Delta V_o F}. \quad (6)$$

The ripple value of the output voltage V_o should be considered while calculating the output capacitor value. For a desired output capacitance value, the $\Delta V_o = 0.02 V_o$. So, equation (6) becomes

$$C_O \geq \frac{D}{0.02 F R_L}. \quad (7)$$

The value of the input capacitor can be calculated from equation (8).

$$C_{in} = \frac{V_i D}{8 F L \Delta V_i}. \quad (8)$$

The input capacitor reduces the input voltage ripple, so for the desired input capacitance, $\Delta V_i \geq 0.01 V_i$. This makes equation (8) as follows:

$$C_{in} \geq \frac{D}{0.08 F^2 L}. \quad (9)$$

The parameters of the 1 kHZ, 100 V boost capacitor with R_L of 10 Ω include a 0.625 mF inductor, 0.01 C input capacitor, and 2.5 mC output capacitor. All the component values are calculated with a duty value of 0.5.

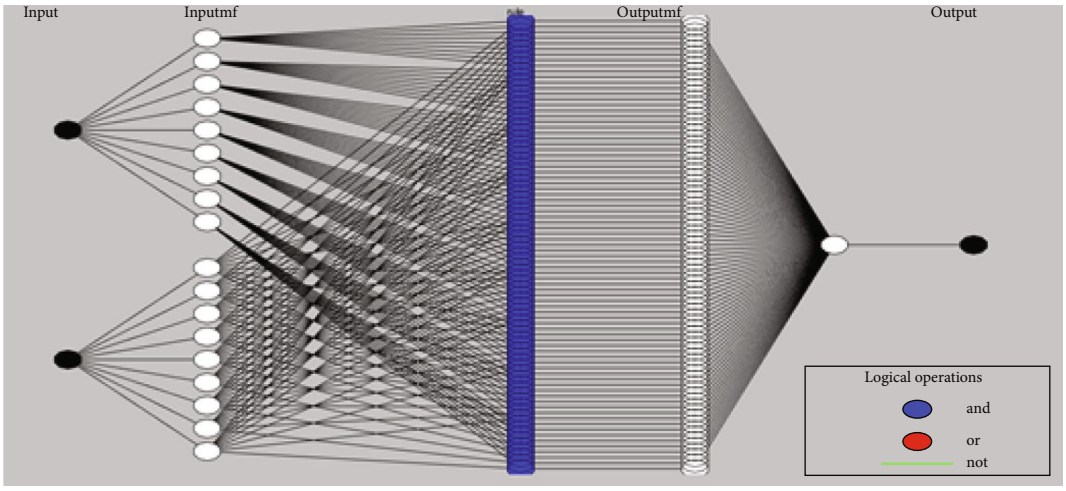

Figure 9: Architecture of the proposed ANFIS MPPT.

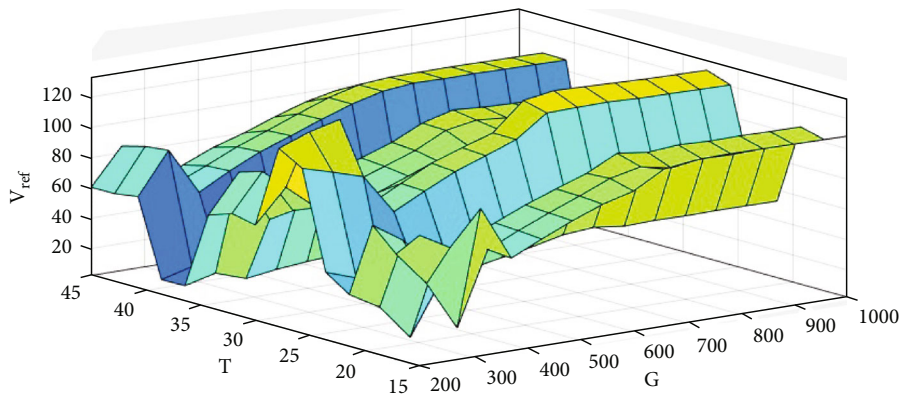

Figure 10: Rules of the ANFIS MPPT.

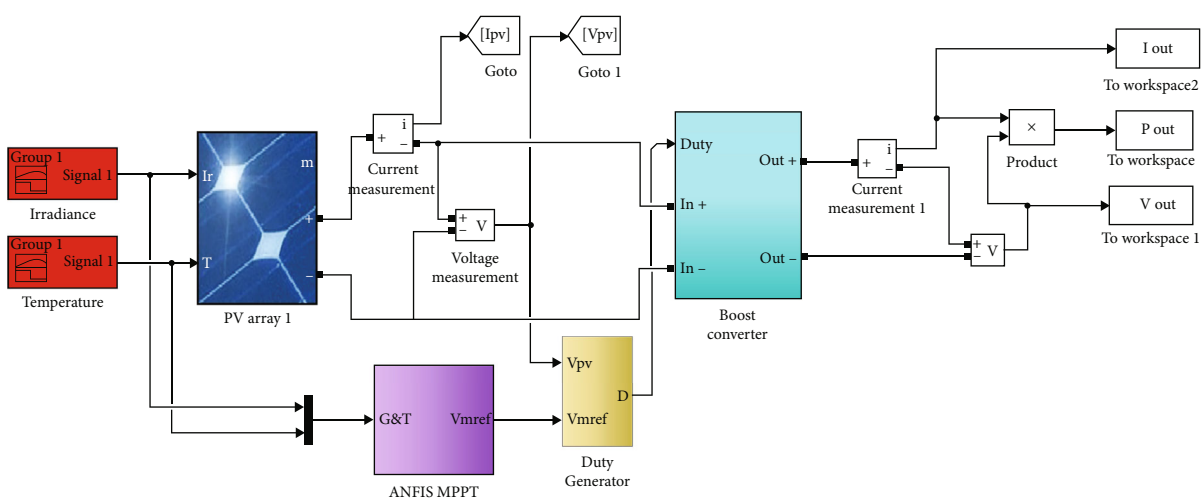

Figure 11: Simulink model of the power optimizer with ANFIS MPPT.

3. ANFIS-Based MPPT

Adaptive neuro-fuzzy inference system ropes in functionalities of ANN and fuzzy logic. The Sugeno fuzzy controller can be trained by an ANN to derive the precise membership functions for the variables based on their interrelatedness [14, 15]. The weights of the nodes involved also can be derived to make up a complete rule base. The solar irradiance and ambient temperature or the PV array voltage and PV array current can be used as inlet of the model. The

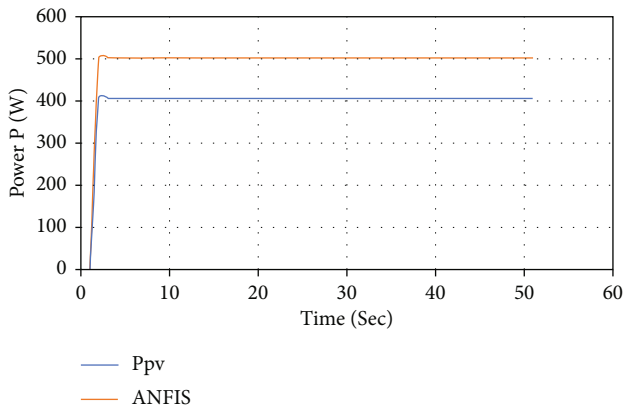

Figure 12: Output power of the optimizer with ANFIS MPPT at STC.

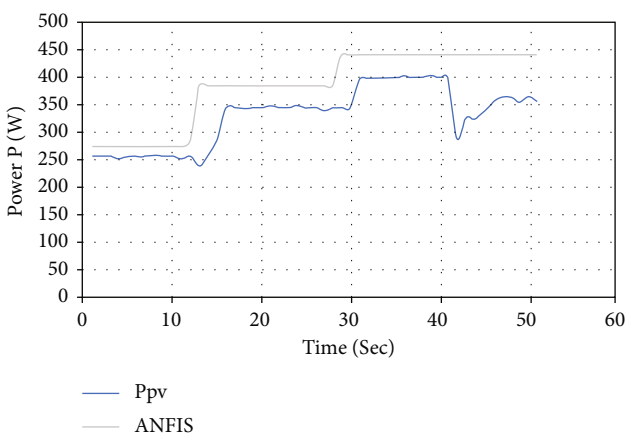

Figure 13: Output power of the optimizer with ANFIS MPPT at VWC.

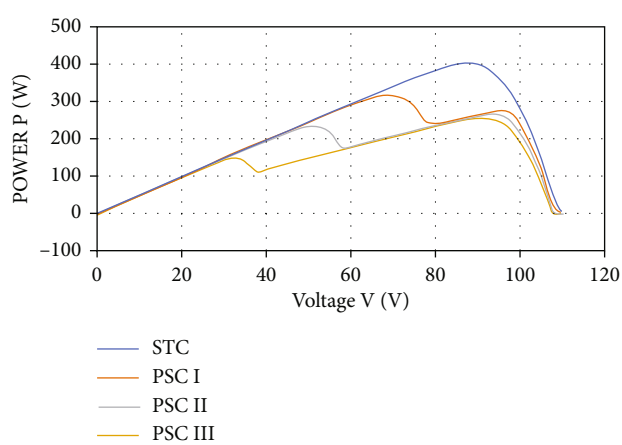

Figure 14: PV curve under PSCs.

ANN helps to easily tune the membership function and rule table [16, 17]. The inference system of the ANFIS controller matches to a set of fuzzy rulebooks with learning fitness for the optimization of nonlinear functions. The fuzzy rule sets for a two-input (x, y)–one output (z) FIS can be given as follows:

The 1st rule is that if x is A_1 and y is B_1, then,

$$f_1 = p_1 x + q_1 y + r_1. \tag{10}$$

The 2nd rule is that if $x$is$A_2$and$y$ is B_2, then,

$$f_2 = p_2 x + q_2 y + r_2. \tag{11}$$

And the output function is given by equation (15).

$$f = \frac{w_1 f_1 + w_2 f_2}{w_1 + w_2} = \overline{w_1} f_1 + \overline{w_2} f_2. \tag{12}$$

The architecture of the ANFIS with two inputs (x, y) and one output (z) is given in Figure 3.

3.1. Layer 1. All the nodes are usually adaptable. In the output of node i in this layer O_1, i depends on the input of the membership functions of the respective node I.

$$\begin{aligned} O_1, i &= \mu_{Ai}(x), \quad \text{for } i = 1, 2, \\ O_1, i &= \mu_{Bi-2}(y), \quad \text{for } i = 3, 4. \end{aligned} \tag{13}$$

Here, x and y are the inputs and Ai and Bi are fuzzy sets in the parametric form associated with node i. In this work, membership functions used for the inputs x and y are Gaussian.

3.2. Layer 2. Nodes are fixed and the output of the node i is the result of input functions. This layer acts as a multiplier and is called a neural network layer.

$$O_2, i = w_i = \mu_{Ai}(x) * \mu_{Bi}(y), \quad \text{for } i = 1, 2. \tag{14}$$

3.3. Layer 3. All the nodes are fixed and characterized by N. In the output of layer 3, O_3, i is called standardized firing strengths since it is the sum of the firing strengths of rules from the previous layer.

$$O_3, i = \overline{w_i} = \frac{w_i}{w_1 + w_2}, \quad \text{for } i = 1, 2. \tag{15}$$

3.4. Layer 4. The characteristics of the nodes are adaptable and the parameters are consequent. This is a fuzzy logic node with a parameter set $\{p_i, q_i, r_i\}$. The output of the node is shown in equation (16)

$$O_4, i = \overline{w_i} f_i = \overline{w_i}(p_i x + q_i y + r_i), \quad \text{for } i = 1, 2. \tag{16}$$

3.5. Layer 5. It has only one node fixed and its output is computed as a total of every incoming signal. The output function of this node is shown in equation (17).

$$O_5, i = \sum_i \overline{w_i} f_i = \frac{\sum_i w_i f_i}{\sum_i w_i}, \quad \text{for } i = 1, 2. \tag{17}$$

The architecture of an ANFIS is not a unique design; different layers can be combined as required by the application. The training algorithm of the ANFIS tunes the alterable

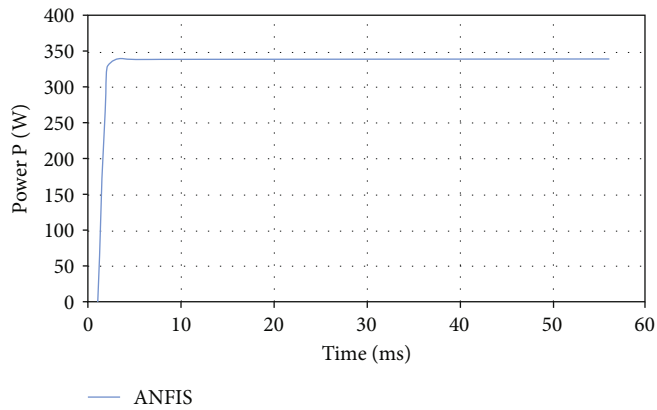

Figure 15: Output power of the ANFIS MPPT at PSC I.

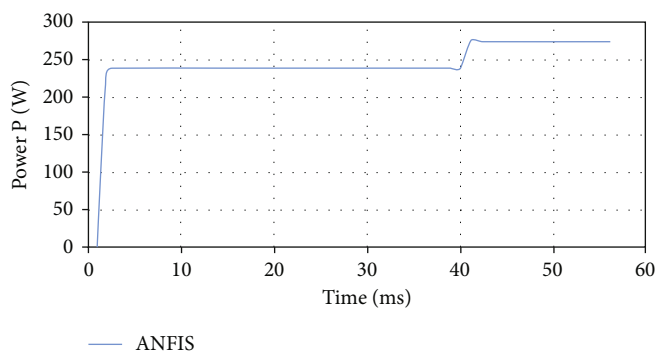

Figure 16: Output power of the ANFIS MPPT at PSC II.

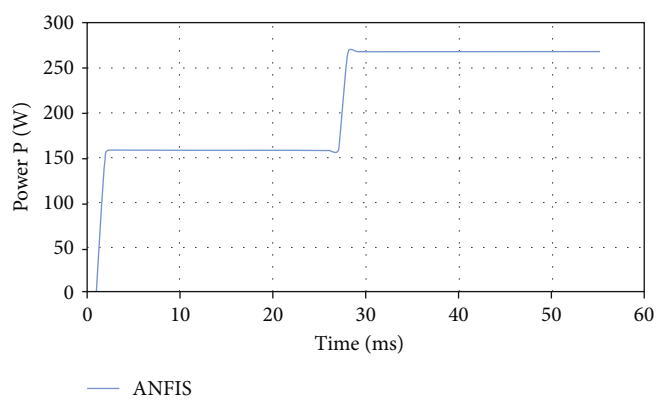

Figure 17: Output power of the ANFIS MPPT at PSC III.

Table 1: Output values.

Evaluation parameters	P_{max} (kW)	Tr (ms)	η (%)	Oscillations	Sensors
ANFIS	0.502	3	30.23	No	G, T

parameters in the adaptive layers (layer 1—A_i, B_i; layer 4—p_i, q_i, r_i) to match the output of the training datasets. The datasets were generated through simulation of the solar PV array under various weather conditions by randomly altering the solar irradiance and temperature values.

The ANFIS model proposed depends on the zero-order Sugeno fuzzy model. The Sugeno fuzzy model has built-in features for training the fuzzy controller. It is time efficient and less complex. The output of the PV array implies two main factors—irradiance hitting over it and temperature. The relationship between the output power and these two factors are studied through correlation analysis. Where Pearson's coefficient of correlation between the power and irradiance and power and temperature are 0.97264 and 0.78435,

respectively. Hence, irradiance G (W/m^2) and temperature T (°C) are considered the inputs for the ANFIS controller. The maximum voltage (V_m) generated at a given instance is considered as the output and is fed into a duty generator. The duty cycle generator is a basic pulse width modulator which compares the ANFIS output with the measured voltage V_{pv} and produces the duty pulse for the boost converter based on the difference between the two voltages. The Sugeno fuzzy model with two inputs and one output is given in Figure 4.

The ANIFIS is trained with 231 datasets acquired from the I-V and P-V characteristics of Canadian Solar CS5C-80M modules at various weather conditions. The datasets were simulated based on the real-time data of Canadian Solar CS5C-80M modules. And the best sets were selected for training the ANFIS. The datasets employed in the training are shown in Figure 5, and the output of the training are shown in Figure 6. The membership functions of the corresponding input variables are shown in Figures 7 and 8.

The architecture of the proposed ANFIS is shown in Figure 9.

The proposed controller has 81 rules and they are plotted in three dimensions as in Figure 10. There are 81 rules in the proposed controller. These rules were obtained by training the controller with the datasets. The rules are depicted in the pictorial form in Figure 10.

The ANFIS generates a reference duty value, based on which the duty generator creates the duty signal to control the boost controller output. The ANFIS-based maximal power point tracker is simulated in MATLAB/SIMULINK for the proposed solar PV array of five Canadian Solar CS5C-80M modules serially connected to a boost converter for optimizing the output power. The SIMULINK design is portrayed in Figure 11.

4. Results & Discussion

The proposed optimizer is tested under different conditions as presented as follows.

4.1. Standard Test Condition. The standard test conditions indicate that the SPV array works using an irradiance of 1000 W/m^2 and temperature of 25°C. The controller boosts the input voltage level to match the load voltage; hence, the values are higher. The output power of various maximum power point techniques at STC is compared with the output power of the PV array and it is shown in Figure 12.

4.2. Under Rapidly Varying Weather Conditions. The PV array was tested for rapidly varying atmospheric conditions, which was achieved by varying the irradiance and temperature pattern. The inlet signals of the SPV array for varying weather condition VWC is given in Figure 13.

4.2.1. Partial Shading Conditions. The partial shading condition I is influenced in the PV array by reducing the irradiance input of one module by half (500 W/m2). In this condition, two modules out of the five in the PV array are partially shaded with irradiance values of 400 W/m^2 and 500 W/m^2. In this condition, three modules out of the five in the PV array are partially shaded with irradiance values of 400 W/m^2, 500 W/m^2, and 600 W/m^2. Figure 14 describes the effect of partial shading condition III on power-voltage characteristics of the array.

Figures 15–17 represent the output power of the ANFIS MPPT at PSC I, PSC II, and PSC III, respectively. The ANFIS controller responds faster at all PSCs and shows no power fluctuations. The fuzzy controller converges at the same speed as the ANFIS controller in PSC I and II but shows a remarkable response delay under PSC III. Moreover, the fuzzy controller exhibits a little fluctuation under PSC I.

The efficiency is given by equation (18), where P_{max} is the maximum power produced in Watts, G is irradiance in W/m^2, and A is the area of total array $A = 1.6864\,\text{m}^2$ as in Table 1.

$$\eta = \frac{P_{max}}{GA} \times 100. \tag{18}$$

5. Conclusion

Soft computing approaches are well suited to handling nonlinear issues due to their aptitude and inimitability. Depending on the problem type, almost every technology has certain inadequacies. ANFIS technology proves better convergence and efficiency over the fuzzy technique. Yet, the performance of the ANFIS controller depends on the eminence of the training datasets. Nature-based algorithms like genetic algorithms can be employed to optimize the datasets employed in training the ANFIS controller to further improve its efficiency.

Data Availability

The data used to support the findings of this study are included within the article. Further data or information is available from the corresponding author upon request.

Conflicts of Interest

The authors declare that there are no conflicts of interest regarding the publication of this paper.

Acknowledgments

The authors appreciate the supports from Ambo University, Ambo, Ethiopia, for providing help during the research and preparation of the manuscript. The authors thank The Gandhigram Rural Institute, Umm Al-Qura University, Mother Terasa College of Engineering and Technology, for the support in completing the work.

References

[1] L. Bouselham, M. Hajji, B. Hajji, and H. Bouali, "A new MPPT-based ANN for photovoltaic system under partial shading conditions," *Energy Procedia*, vol. 111, pp. 924–933, 2017.

[2] D. Mlakić, L. Majdandžić, and S. Nikolovski, "ANFIS used as a maximum power point tracking algorithm for a photovoltaic system," *International Journal of Electrical and Computer Engineering*, vol. 8, no. 2, pp. 867–879, 2018.

[3] S. Motahhir, A. El Ghzizal, S. Sebti, and A. Derouich, "Modeling of photovoltaic system with modified incremental conductance algorithm for fast changes of irradiance," *International Journal of Photoenergy*, vol. 2018, 2018.

[4] D. Saravana, J. Mohammed, V. Umayal, and M. Indumathi, "Simulation of fuzzy logic control based MPPT technique for photovoltaic system," in *International Conference on Inovations in Engineering and Technology*, pp. 10–14, Penang (Malaysia), 2014.

[5] B. Bendib, F. Krim, H. Belmili, M. F. Almi, and S. Boulouma, "Advanced fuzzy MPPT controller for a stand-alone PV system," *Energy Procedia*, vol. 50, pp. 383–392, 2014.

[6] M. Azaharahmed, K. Raja, M. K. Patan, C. D. Prasad, and P. Ganeshan, "Invasive weed optimized area centralized 2 degree of freedom combined PID controller scheme for automatic generation control," *Journal of Electrical Engineering & Technology*, vol. 16, no. 1, pp. 31–42, 2021.

[7] A. M. Noman, K. E. Addoweesh, and A. I. Alolah, "Simulation and practical implementation of ANFIS-based MPPT method for PV applications using isolated Ćuk converter," *International Journal of Photoenergy*, vol. 2017, Article ID 3106734, 15 pages, 2017.

[8] V. Jeyabalaji, G. R. Kannan, P. Ganeshan, K. Raja, B. Nagaraja Ganesh, and P. Raju, "Extraction and characterization studies of cellulose derived from the roots of Acalypha indica L," in *Journal of Natural Fibers*, pp. 1–13, Taylor & Francis, 2021.

[9] A. A. Aldair, A. A. Obed, and A. F. Halihal, "Design and implementation of ANFIS-reference model controller based MPPT using FPGA for photovoltaic system," *Renewable and Sustainable Energy Reviews*, vol. 82, pp. 2202–2217, 2018.

[10] D. Subbulekshmi and J. Kanakaraj, "Decoupling and linearizing of a pH plant using Hirschorn's and genetic algorithms," *Journal of Computer Science.*, vol. 8, no. 8, pp. 1422–1427, 2012.

[11] M. K. Patan, K. Raja, M. Azaharahmed, C. D. Prasad, and P. Ganeshan, "Influence of primary regulation on frequency control of an isolated microgrid equipped with crow search algorithm tuned classical controllers," *Journal of Electrical Engineering & Technology*, vol. 16, no. 2, pp. 681–695, 2021.

[12] L. L. Jiang, D. R. Nayanasiri, D. L. Maskell, and D. M. Vilathgamuwa, "A hybrid maximum power point tracking for partially shaded photovoltaic systems in the tropics," *Renewable energy*, vol. 76, pp. 53–65, 2015.

[13] C. Ben Salah and M. Ouali, "Comparison of fuzzy logic and neural network in maximum power point tracker for PV systems," *Electric Power Systems Research*, vol. 81, no. 1, pp. 43–50, 2011.

[14] S. Lyden and M. E. Haque, "Maximum power point tracking techniques for photovoltaic systems: a comprehensive review and comparative analysis," *Renewable and Sustainable Energy Reviews*, vol. 52, pp. 1504–1518, 2015.

[15] A. A. Kulaksiz, "ANFIS-based estimation of PV module equivalent parameters: application to a stand-alone PV system with MPPT controller," *Turkish Journal of Electrical Engineering & Computer Sciences*, vol. 21, pp. 2127–2140, 2013.

[16] R. K. Kharb, M. F. Ansari, and S. L. Shimi, "Design and implementation of ANFIS based MPPT scheme with open loop boost converter for solar PV module," *International Journal of Advanced Research in Electrical, Electronics and Instrumentation Engineering*, vol. 3, no. 1, pp. 6517–6524, 2014.

[17] N. Akshaykumar and D. Subbulekshmi, "Online auto selection of tuning methods and auto tuning PI controller in FOPDT real time process-pH neutralization," *Energy Procedia*, vol. 117, pp. 1109–1116, 2017.