Hindawi
Journal of Computer Networks and Communications
Volume 2023, Article ID 9285354, 7 pages
https://doi.org/10.1155/2023/9285354

Research Article

Graphene-Based Full-Duplex Antenna for Future Generation Communication in THz Frequency Range

Avez Syed and Mansour H. Almalki

Electrical and Computer Engineering Department, Faculty of Engineering, King Abdulaziz University, P.O. Box 80204, Jeddah 21589, Saudi Arabia

Correspondence should be addressed to Avez Syed; asaim@stu.kau.edu.sa

Received 11 October 2022; Revised 3 November 2022; Accepted 23 March 2023; Published 4 April 2023

Academic Editor: Divya Chaturvedi

A proximity-coupled graphene patch-based full-duplex antenna is proposed for terahertz (THz) applications. The antenna provides a 10 dB impedance bandwidth of 6.06% (1.76 – 1.87 THz). The input ports of the proposed design are isolated from each other by −25 dB. The aspect ratio of the graphene-based radiating patch and the physical parameters of the antenna is selected for obtaining the single-mode operation. The dimensions (length and width of graphene) of the proposed antenna have been opted to operate in two higher-order orthogonal modes, and these modes remain intrinsically isolated. The utilization of the graphene material provides flexibility in tuning the antenna response. Graphene-based patch exhibits good electrical conductivity, electrical conductance controllability, and plasmon properties. The graphene-based antennas perform better than their metallic counterparts, especially in the THz frequency range. The radiation properties of the graphene material are more prominent due to no-ohmic losses. Moreover, its chemical potential may be altered by applying a bias voltage to its surface conductivity, which modifies the surface impedance value of graphene. Therefore, with a small footprint, graphene acts as an excellent radiator at extremely high frequencies.

1. Introduction

With the advancement in high-speed data communication, terahertz (THz) components have been investigated for the present and future through innovative processes and technologies. Antennas in the THz frequency ranges (0.1 to 10 THz) have been extensively investigated and engineered for different applications. Expanding compact transceiver subsystems of data transmission at low power with ultrafast speed and superbroad bandwidth-like features are desirable for future generation communication [1–6]. Microwave and millimetre wave communication systems use metallic antennas/radiators in transceiver systems. However, they display poor conductivity at higher frequencies or the THz range [7–9]. Consequently, it is required to discover the replacement of metallic radiators in different devices operating in THz frequencies. Switching carrier frequencies to the terahertz band is a natural substitute for meeting future-generation needs, i.e., high-speed data communications [10–12]. However, compared to lower frequency antenna systems, the THz antennas have specific characteristics, including higher transmission path loss and additional molecular losses due to the absorption of the radiation energy [13]. In recent times, to combat this, many strategies have been employed. The highly directional antennas have been suggested to overcome path loss issues and to improve the channel capacity [14]. On the other hand, conventional radio frequencies (RF) and optical transceivers have numerous shortcomings, such as their bulky size, design complexity, and energy consumption [15, 16]. These constraints have prompted researchers to investigate novel nanomaterials as the foundation for next-generation electronics beyond silicon. Graphene is one of the most promising substitutes [17–26].

Graphene exhibits good electrical conductivity, electrical conductance controllability, and plasmon properties. In case

graphene is integrated into antenna systems, it shows improved radiation properties than typical counterparts in metal antennas at extremely high frequencies. This is due to its good conductivity and the fact that its chemical potential may be altered by applying a bias voltage to its surface conductivity, which varies the value of the surface impedance of graphene. Moreover, its conductivity can be tuned either by doping during manufacturing or by applying an external electrostatic direct current (DC) voltage [14, 27–29]. Recently, several graphene-based antenna designs have been reported for different applications. A graphene-based antenna was reported for the ultrashort range impulse communication and biosensing applications in [30, 31], respectively. The graphene material was loaded in the realization of plasmonic antennas [32]. A mathematical model was computed for a planar graphene antenna with a triangular-shaped radiator [33]. As mobile communications evolve into the fifth generation, to offer a high-speed data rate and reduced latency, multi-input-multioutput (MIMO) antenna systems were investigated. Various MIMO antennas operating in microwave, millimetre wave (mmWave), and THz frequency ranges were reported in [26, 34–36].

A full-duplex antenna system is required to deal with practical wireless communication connectivity. In general, a full-duplex antenna system comprises two indispensable components, i.e., duplexers and antennas. Traditionally, they are designed independently and integrated with the help of a suitable transmission line. However, incorporating these components increases the system complications in limited space and leads to colossal power consumption due to a massive number of radio-frequency chains. In addition, such configuration increases the complexity and is less favourable in array extension. Hence, the concept of a self-duplex antenna was introduced in recent research [37–43]. These antennas allow a more straightforward solution to enhance the performance of a two-way communication system. The main concern of THz antennas is their low gain and radiation efficiency. This enforces exploring a suitable way to implement THz antennas with duplexing (filtering) functionality. To the authors' knowledge, no work has been reported for full-duplex design in the THz communication range. Here, a graphene-based full-duplex antenna for THz communications is introduced. A single graphene patch is excited with the help of a proximity-coupled two-port feeding mechanism. The design maintains the simple configuration of the planar feeding technique. The graphene has proven capability to exhibit good radiation characteristics, owing to the absence of Ohmic losses and surface waves. These attractive features of graphene make it a preferred choice over a metallic antenna, especially at the THz frequency range.

The difference in the architecture of the conventional and the self-duplex antenna for dual-band operation is illustrated in Figure 1. The duplex antenna is a radio-frequency component that supports the separation or combination of two frequency channels (bands) and allows them to operate on a single antenna module. Duplex antennas are provided with low-frequency and high-frequency ports. The idea can be further extended as N-frequency with N-input ports. Here, N is the number of frequency channels.

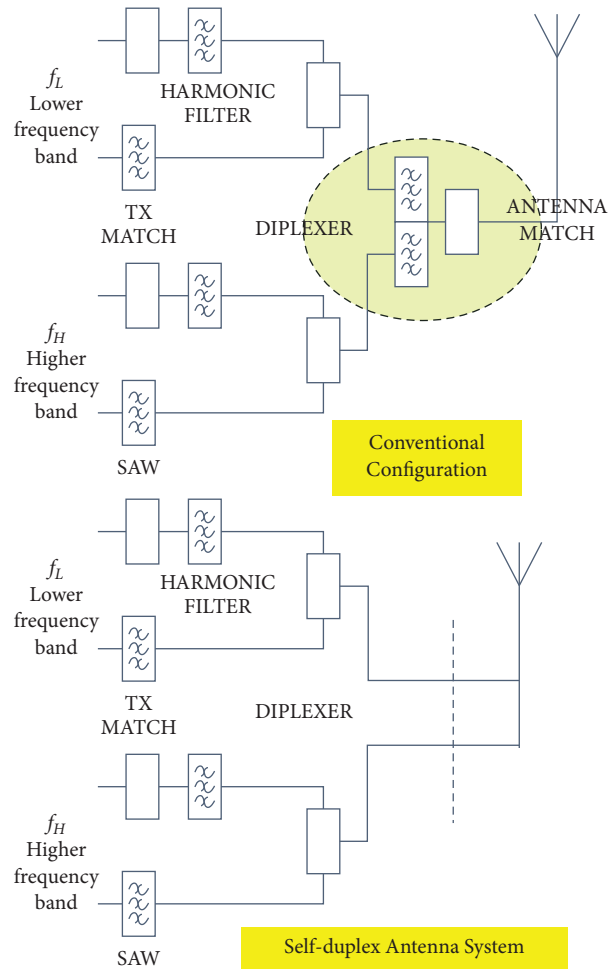

Figure 1: Architecture of self-duplex antenna system.

2. Graphene-Based Full-Duplex Antenna Modelling

The geometrical view of the proposed graphene-based self-duplex antenna is shown in Figure 2. This configuration contains a layered structure of two substrates with proximity-coupled feeding systems. The silicon dioxide is used as a dielectric substrate with a permittivity of 3.8. The substrate of height ($h1$) is placed just above the perfect electric conductor (PEC). Another substrate-2 of height ($h2$) is placed just above it. The PEC-based 50 Ω microstrip feed lines are sandwiched between these two silicon-based dielectric substrates. A thin film of the graphene material is polished on the top layer of the dielectric substrate-2. The thickness of the graphene film is optimally chosen as 0.001 mm. This film acts as a radiator when it is excited by proximity-coupled feeding. To realize the full-duplex functionality, an orthogonal feeding system is used. The aspect ratio of the proposed design is maintained in such a way that both microstrips feed excite the orthogonal higher-order modes. Moreover, the resonant frequency corresponding to the excited feed can be controlled by changing the corresponding dimension of the rectangular patch. The impedance-matching characteristics of the patch

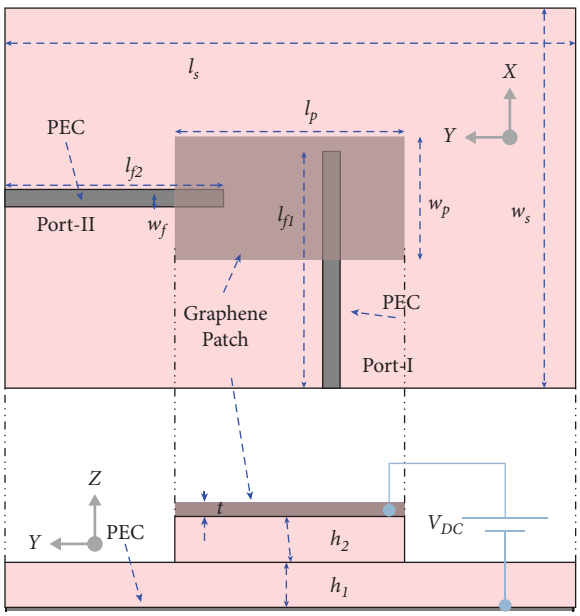

Figure 2: Configuration of the proposed graphene-based full-duplex antenna.

can be optimised by changing the length of the microstrip line. Also, the resonance of the patch can be tuned by changing the length of the microstrip line, as it controls the magnitude of the coupling energy with the graphene patch.

The graphene patch is modelled by adopting the mechanism explained in [25]. The parameters of the graphene layer, including its thickness (t) and relaxation time (τ), are opted such that the antenna can be realized physically. These parameters are designated in such a way that a suitable positive value of the external electrostatic DC voltage is required for the tuning of chemical potential (μc) and the surface conductivity (σg) of graphene material. In the antenna structure, a metal gate layer is implanted at the top of the graphene patch for applying the DC gate voltage. The length and width of the metallic gate layer are kept equal to the graphene patch so that its Fermi level can be maintained uniformly when the external voltage biasing is performed. The surface conductivity of graphene varies with radian frequency (ω), scattering rate ($\Gamma = 1/\tau$), temperature (T), applied magnetostatic bias field (Bo), and μC. The chemical potential is a function of the applied electrostatic field (Eo). Kubo's formalism reports that σg is a combination of Hall's and diagonal conductivity [25]. The Hall's conductivity of graphene becomes zero for Bo = 0, as given in [6]. Thus, σg is only due to Eo, which is generally called diagonal conductivity. The diagonal conductivity of graphene is the composition of interband and intraband transitions [1–4]. Thus, σg is only due to the intraband contribution in the operating frequency band of the designed two-port antenna.

3. Working Principle and Result Analysis

The dimensions of the proposed design are provided in Table 1. The length and the width of the patch antenna are optimised in such a way that the antenna offers the two distinct frequency bands for simultaneous transmitting and receiving channel operation in the frequency range of THz frequency applications.

Table 1: The dimensions of the antenna structure.

l_s	w_s	l_p	w_p	l_{f1}	h_1	h_2	t	w_f	l_{f2}
60	40	25	13	25	1.6	1.6	0.001	1.8	23

All dimensions are in millimetres (mm).

Finally, the optimised design operates at a lower frequency band of around 1.8 THz and a higher frequency band of about 2.0 THz frequency. Furthermore, the tuning of the antenna response is possible by varying the chemical potential of the graphene material, a feature available in CST MWS. Figure 3 shows the electric field distributions at the operating frequencies at Port-1 and Port-2. It can be clearly evidenced that the antenna operates in higher-order modes. As shown in Figure 3(a), the electric field shows three half-wave variations along the length of the graphene patch. On the other hand, it offers two half-wave variations when Port-2 is on. It is observed that the incident field is radiated through the appropriate aperture without being transmitted to another port. Thereby, input port isolation is enhanced and maintained. Finally, the optimised design with parameters is shown in Table 1. The lower resonant frequency occurs at 1.83 THz and is generated when Port-1 is excited, and the antenna radiates along the broader side of the rectangular graphene patch. Similarly, the resonance at upper resonant frequency is generated from Port-2 when it is excited along the narrower side of the rectangular graphene patch. The length of the radiating patch is chosen to be much larger than half of the guide wavelength at the resonant frequencies, so it shows functionality at higher-order modes corresponding to Port-1 and Port-2.

The frequency response of the proposed design in terms of S-parameters is shown in Figure 4. The design shows that the coupling of the energy from Port-1 to Port-2 and vice versa is below −20 dB. The same can be inferred from Figure 3 that the resonant frequency of each channel can be tuned without affecting the other channel by maintaining the same level of port isolation. Also, it operates in different high-order modes. The 3D far-field radiation pattern at the resonant frequencies is shown in Figure 5. The proposed design shows unidirectional radiation patterns due to the large ground plane at the bottom. The peak directivity of the antenna in the broadside direction is noted as 2.44 and 2.79 dBi at 1.83 and 2.06 THz, respectively. Moreover, the proposed THz design has a compact structure and simple design procedure, which would make it attractive to choose for upcoming communication systems. The proposed design offers the flexibility of using one device and one board layout to cover dual-frequency bands and substitutes the conventional design mechanism.

3.1. Future Applications of THz Technology. THz range of the electromagnetic spectrum has increasingly been used in numerous sectors for practical purposes, and research on the use of THz technology in communications, radar, imaging, sensors, and other areas has been reported in recent years.

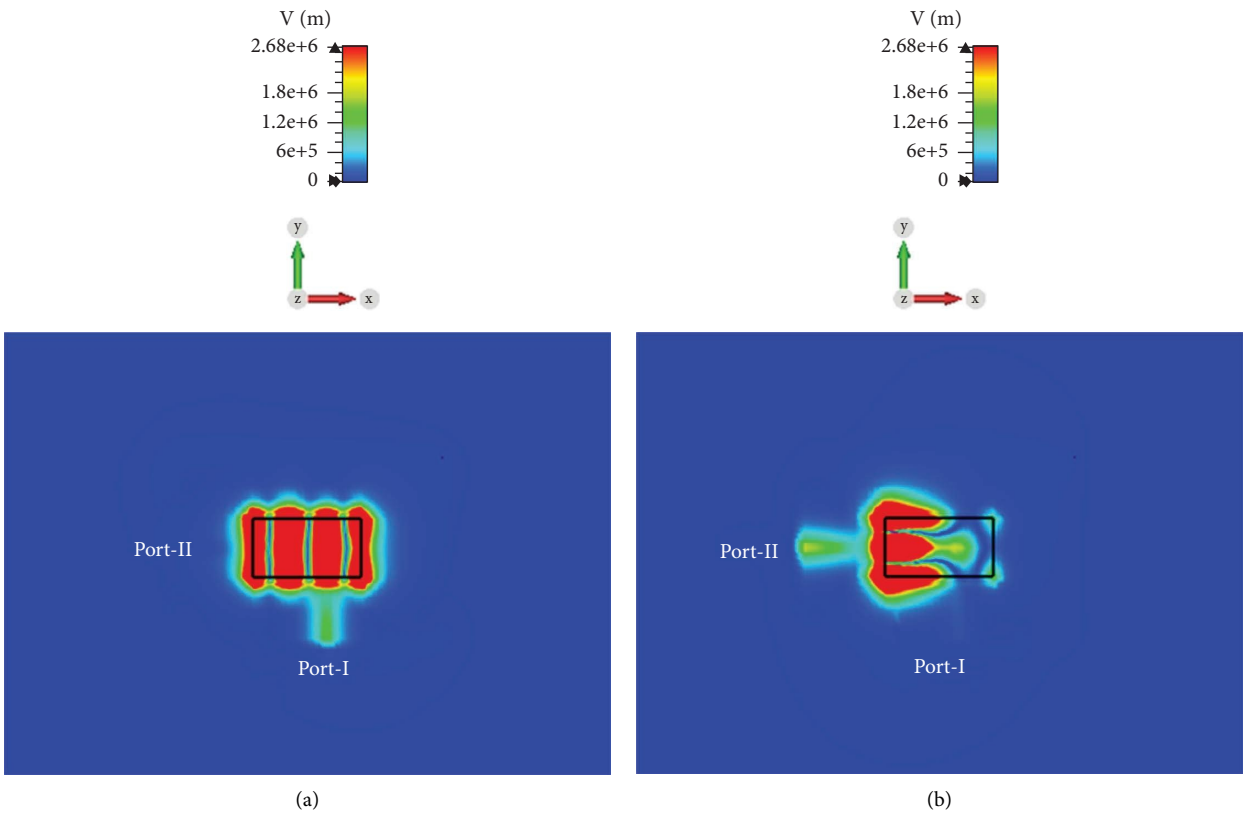

Figure 3: Field distributions: (a) at 1.83 THz, when Port-1 is excited. (b) At 2.06 THz, when Port-2 is excited.

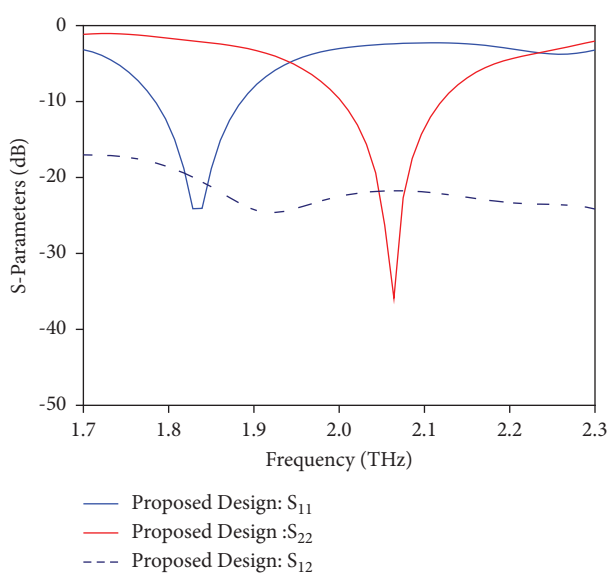

Figure 4: Simulated S-parameters of the proposed design.

The need for a wide bandwidth has prompted research into the THz frequency spectrum and THz communication components. Terahertz (THz) radiation is receiving increasing attention for its very diverse range of applications in both technology and science, including areas such as information and communications technology (ICT), non-destructive sensing and imaging, strong light-matter coupling, physics, and biology.

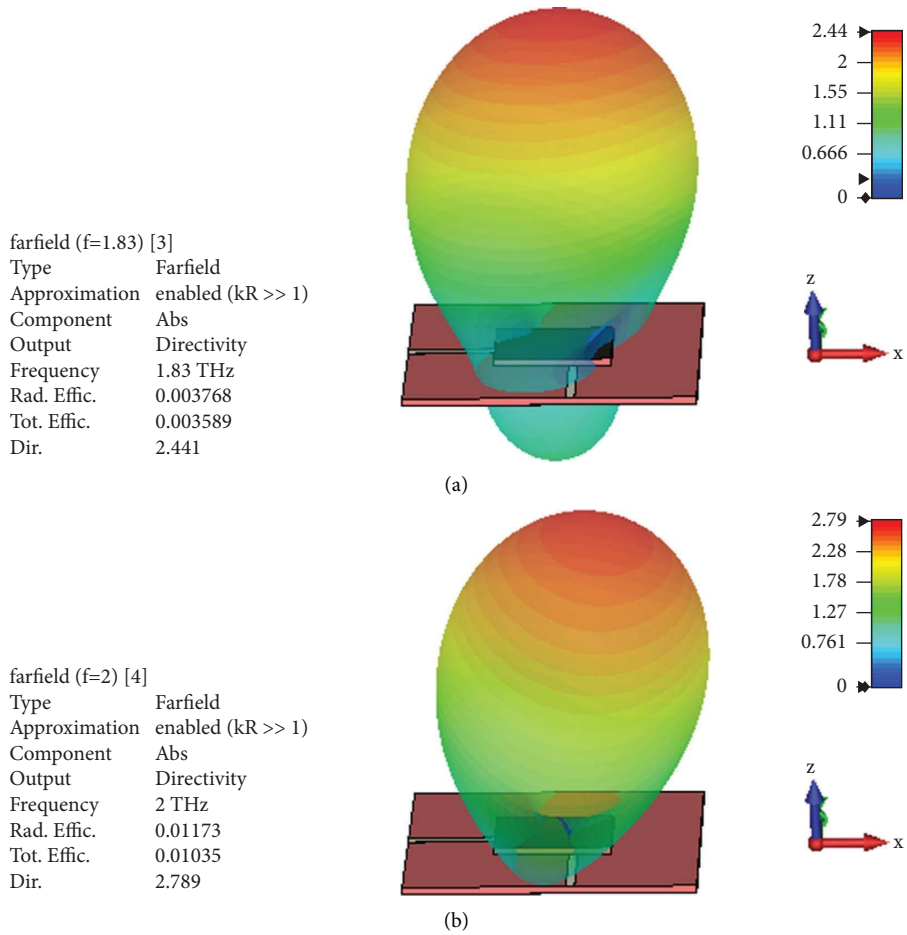

Figure 5: Radiation patterns: (a) at 1.83 THz, when Port-1 is excited. (b) At 2.06 THz, when Port-2 is excited.

4. Conclusion

A proximity-coupled graphene patch-based two-port duplexing antenna is realized for simultaneous transmitting and receiving channel operation in the frequency range of THz frequency applications. The physical parameters of the antenna can be selected for desired operating frequency. The operating frequency maintains a small frequency ratio, and the same can be manipulated further. The antenna maintains isolation better than 20 dB between input ports which helps to realize duplexing functionality and radiation characteristics as a single unit. The proposed design offers the flexibility of using one device and one board layout to cover dual-frequency bands and substitutes the conventional design mechanism. The proposed design possesses an overall compact footprint, which makes this design extremely useful for applications in forthcoming wireless communication systems.

Data Availability

No data were used to support the findings of this study.

Conflicts of Interest

The authors declare that they have no conflicts of interest.

References

[1] N. R. N. M. Rodrigues, R. de Oliveira, and V. Dmitriev, "Smart terahertz graphene antenna: operation as an omnidirectional dipole and as a reconfigurable directive antenna," *IEEE Antennas and Propagation Magazine*, vol. 60, no. 5, pp. 26–40, 2018.

[2] G. Varshney, S. Gotra, V. S. Pandey, and R. S. Yaduvanshi, "Proximity-coupled graphene-patch-based tunable single-/dual-band notch filter for THz applications," *Journal of Electronic Materials*, Springer, , vol. 48, pp. 4818–4829, 2019.

[3] I. F. Akyildiz, J. M. Jornet, and C. Han, "Terahertz band: next Frontier for wireless communications," *Physical Communication*, vol. 12, pp. 16–32, 2014.

[4] M. Walther, D. G. Cooke, C. Sherstan, M. Hajar, M. R. Freeman, and F. A. Hegmann, "Terahertz conductivity of thin gold films at the metal–insulator percolationn transition," *Physical Review B: Condensed Matter*, vol. 76, pp. 1–9, 2007.

[5] J. D. Gale, A. K. Geim, K. S. Novoselov et al., "The rise of graphene," *Reviews of Modern Physics*, vol. 58, pp. 710–734, 2012.

[6] F. H. L. Koppens, D. E. Chang, and F. J. García De Abajo, "Graphene plasmonics: a platform for strong light-matter interactions," *Nano Letters*, vol. 11, no. 8, pp. 3370–3377, 2011.

[7] A. Kumar, D. Chaturvedi, and S. I. Rosaline, "Design of antenna-multiplexer for seamless on-body internet of medical

things (IoMT) connectivity," *IEEE Transactions on Circuits and Systems II: Express Briefs*, vol. 69, no. 8, pp. 3395–3399, 2022.

[8] A. Kumar and S. Raghavan, "A design of miniaturized half-mode SIW cavity backed antenna," in *Proceedings of the 2016 IEEE Indian Antenna Week (IAW 2016)*, pp. 4–7, Madurai, India, June 2016.

[9] D. Chaturvedi, A. Kumar, and S. Raghavan, "Wideband HMSIW-based slotted antenna for wireless fidelity application," *IET Microwaves, Antennas & Propagation*, vol. 13, no. 2, pp. 258–262, 2019.

[10] L. A. Falkovsky and S. S. Pershoguba, "Optical far-infrared properties of a graphene monolayer and multilayer," *Physical Review B: Condensed Matter*, vol. 76, no. 15, pp. 153410–153414, 2007.

[11] B. Sensale-rodriguez, R. Yan, L. Liu, D. Jena, and H. G. Xing, "Graphene for reconfigurable terahertz optoelectronics," *Proceedings of the IEEE*, vol. 101, no. 7, pp. 1705–1716, 2013.

[12] G. W. Hanson, "Dyadic green's functions for an anisotropic, non-local model of biased graphene," *IEEE Transactions on Antennas and Propagation*, vol. 56, no. 3, pp. 747–757, 2008.

[13] X. Luo, T. Qiu, W. Lu, and Z. Ni, "Plasmons in graphene: recent progress and applications," *Materials Science and Engineering: R: Reports*, vol. 74, no. 11, pp. 351–376, 2013.

[14] G. Varshney, S. Gotra, V. S. Pandey, and R. S. Yaduvanshi, "Proximity-coupledtwo-port multi-input-multi-output graphene antenna with pattern diversity for THz applications," *Nano Communication Networks*, vol. 21, Article ID 100246, 2019.

[15] A. Kumar and S. Raghavan, "Broadband dual-circularly polarised SIW cavity antenna using a stacked structure," *Electronics Letters*, vol. 53, no. 17, pp. 1171-1172, 2017.

[16] A. A. Althuwayb, M. J. Al-Hasan, A. Kumar, and D. Chaturvedi, "Design of half-mode substrate integrated cavity inspired dual-band antenna," *International Journal of RF and Microwave Computer-Aided Engineering*, vol. 31, no. 2, Article ID e22520, 2021 Feb.

[17] I. Rosaline, A. Kumar, P. Upadhyay, and A. H. Murshed, "Four element MIMO antenna systems with decoupling lines for high-speed 5G wireless data communication," *International Journal of Antennas and Propagation*, vol. 2022, Article ID 9078929, 13 pages, 2022.

[18] D. Correas-Serrano, J. S. Gomez-Diaz, A. Alu, and A. Alvarez-Melcon, "Electrically and magnetically biased graphene-based cylindrical waveguides: analysis and applications as reconfigurable antennas," *IEEE Transactions on Terahertz Science and Technology*, vol. 5, no. 6, pp. 951–960, 2015.

[19] V. Dmitriev, G. Tavares, and C. Nascimento, "Graphene terahertz filter," in *Proceedings of the 2015 SBMO/IEEE MTT-S International Microwave and Optoelectronics Conference (IMOC)*, Porto de Galinhas, Brazil, November 2015.

[20] Q. Bao, K. P. Loh, Q. Bao, K. P. Loh, Q. Bao, and K. P. Loh, "Graphene photonics, plasmonics, and broadband optoelectronic devices," *ACS Nano*, vol. 6, no. 5, pp. 3677–3694, 2012.

[21] I. Soto Lamata, P. Alonso-González, R. Hillenbrand, and A. Y. Nikitin, "Plasmons in cylindrical 2D materials as a platform for nanophotonic circuits," *ACS Photonics*, vol. 2, pp. 280–286, 2015.

[22] D. Correas-Serrano, J. S. Gomez-Diaz, D. L. Sounas, Y. Hadad, A. AlvarezMelcon, and A. Alu, "Nonreciprocal graphene devices and antennas based on spatiotemporal modulation," *IEEE Antennas and Wireless Propagation Letters*, vol. 15, pp. 1529–1532, 2016.

[23] D. Conteduca, F. Dell'Olio, C. Ciminelli, and M. N. Armenise, "Resonant graphenebased tunable optical delay line," *IEEE Photonics Journal*, vol. 7, no. 6, pp. 1–9, 2015.

[24] A. Andryieuski and A. V. Lavrinenko, "Graphene metamaterials based tunable terahertz absorber: effective surface conductivity approach," *Optics Express*, vol. 21, no. 7, p. 9144, 2013.

[25] G. Deng, T. Xia, J. Yang, L. Qiu, and Z. Yin, "Tunable terahertz metamaterial with agraphene reflector," *Materials Research Express*, vol. 3, no. 11, pp. 115801–115809, 2016.

[26] G. Varshney, "Reconfigurable graphene antenna for THz applications: a mode conversion approach," *Nanotechnology*, vol. 31, no. 13, Article ID 135208, 2020.

[27] P. Y. Chen, C. Argyropoulos, and A. Alu, "Terahertz antenna phase shifters using integrally-gated graphene transmission-lines," *IEEE Transactions on Antennas and Propagation*, vol. 61, no. 4, pp. 1528–1537, 2013.

[28] T. Low and P. Avouris, "Graphene plasmonics for terahertz to mid-infrared applications," *ACS Nano*, vol. 8, no. 2, pp. 1086–1101, 2014.

[29] R. Filter, M. Farhat, M. Steglich, R. Alaee, C. Rockstuhl, and F. Lederer, "Tunable graphene antennas for selective enhancement of THz-emission," *Optics Express*, vol. 21, no. 3, p. 3737, 2013.

[30] Y. Dong, P. Liu, D. Yu, G. Li, and F. Tao, "Dual-band reconfigurable terahertz patch antenna with graphene-stack-based backing cavity," *IEEE Antennas and Wireless Propagation Letters*, vol. 15, pp. 1541–1544, 2016.

[31] M. N. Moghadasi, R. A. Sadeghzadeh, M. Toolabi, P. Jahangiri, and F. B. Zarrabi, "Fractal cross aperture nano-antenna with graphene coat for bio-sensing application," *Microelectronic Engineering*, vol. 162, pp. 1–5, 2016.

[32] S. Abadal, I. Llatser, A. Mestres, H. Lee, E. Alarcon, and A. Cabellos-Aparicio, "Time-domain analysis of graphene-based miniaturized antennas for ultrashort-range impulse radio communications," *IEEE Transactions on Communications*, vol. 63, no. 4, pp. 1470–1482, 2015.

[33] F. Capasso, *Broad Electrical Tuning of Graphene-Loaded Plasmonic Antennas - Nano Letters*, ACS Publications, Washington, DC, USA, 2013.

[34] R. Bala and A. Marwaha, "Development of computational model for tunable characteristics of graphene based triangular patch antenna in THz regime," *Journal of Computational Electronics*, vol. 15, no. 1, pp. 222–227, 2016.

[35] M. A. Jensen and J. W. Wallace, "A review of antennas and propagation for MIMO wireless communications," *IEEE Transactions on Antennas and Propagation*, vol. 52, no. 11, pp. 2810–2824, 2004.

[36] B. Pramodini, D. Chaturvedi, and G. Rana, "Design and investigation of dual-band 2× 2 elements MIMO antenna-diplexer based on half-mode SIW," *IEEE Access*, vol. 10, pp. 79272–79280, 2022.

[37] A. Kumar, D. Chaturvedi, and S. Raghavan, "Dual-band, dual-fedself-diplexing antenna," in *Proceedings of the 2019 13th European Conference on Antennas and Propagation (EuCAP)*, pp. 1–5, Krakow, Poland, April 2019.

[38] K. R. Boyle, M. Udink, A. de Graauw, and L. P. Ligthart, "A dual-fed, self-diplexing PIFA and RF front-end," *IEEE Transactions on Antennas and Propagation*, vol. 55, no. 2, pp. 373–382, 2007.

[39] Y. C. Lu and Y. C. Lin, "A mode-based design method for dual-band and self-diplexing antennas using double T-stubs loaded aperture," *IEEE Transactions on Antennas and Propagation*, vol. 60, no. 12, pp. 5596–5603, 2012.

[40] A. Kumar and A. A. Althuwayb, "SIW resonator based duplex filtenna," *IEEE Antennas and Wireless Propagation Letters*, vol. 20, no. 12, pp. 2544–2548, 2021 Oct 7.

[41] A. Iqbal, "A compact SIW based self-quadruplexing antenna for wearable transceivers," *IEEE Antennas and Wireless Propagation Letters*, vol. 20, 2020.

[42] S. Sam and S. Lim, "Electrically small eighth-modesubstrate-integrated waveguide (EMSIW) antenna with different resonant frequencies depending on rotation of complementary split ring resonator," *IEEE Transactions on Antennas and Propagation*, vol. 61, no. 10, pp. 4933–4939, 2013.

[43] A. Kumar and S. Imaculate Rosaline, "Hybrid half-mode SIW cavity-backed diplex antenna for on-body transceiver applications," *Applied Physics A*, vol. 127, no. 11, pp. 834–837, 2021.