Hindawi Publishing Corporation
Journal of Control Science and Engineering
Volume 2014, Article ID 715250, 10 pages
http://dx.doi.org/10.1155/2014/715250

Research Article

Adaptive Robust Quadratic Stabilization Tracking Control for Robotic System with Uncertainties and External Disturbances

Jinzhu Peng[1] and Yan Liu[2]

[1] *School of Electrical Engineering, Zhengzhou University, No. 100 of Science Road, Zhengzhou, Henan 450001, China*
[2] *Library of Zhengzhou University, Zhengzhou University, No. 100 of Science Road, Zhengzhou, Henan 450001, China*

Correspondence should be addressed to Jinzhu Peng; jzpeng@zzu.edu.cn

Received 17 December 2013; Revised 20 February 2014; Accepted 20 February 2014; Published 26 March 2014

Academic Editor: James Lam

An adaptive robust quadratic stabilization tracking controller with hybrid scheme is proposed for robotic system with uncertainties and external disturbances. The hybrid scheme combines computed torque controller (CTC) with an adaptive robust compensator, in which variable structure control (VSC) and H_∞ optimal control approaches are adopted. The uncertain robot manipulator is mainly controlled by CTC, the VSC is used to eliminate the effect of the uncertainties and ensure global stability, and H_∞ approach is designed to achieve a certain tracking performance of closed-loop system. A quadratic stability approach, which allows separate treatment of parametric uncertainties, is used to reduce the conservatism of the conventional robust control approach. It can be also guaranteed that all signals in closed-loop system are bounded. The validity of the proposed control scheme is shown by computer simulation of a two-link robotic manipulator.

1. Introduction

Due to the uncertainties, disturbance, and nonlinear system dynamics, tracking control for robot manipulator always is a challenging problem [1, 2]. Therefore, in the past decades, many control approaches have been proposed and applied on controlling the robot manipulator, such as PID control [3], computed torque control method (CTC) [4–6], adaptive control [7, 8], variable structure control (VSC) [9, 10], robust control [11–16], fuzzy control [17–19], and neural networks control [20–24].

Varieties of hybrid control systems have been designed for controlling the complex robotic systems. Chang [25] and Wai [26] utilized neural networks to entirely approximate the equivalent control of VSC and then applied the H_∞ technique to achieve a certain tracking performance. In these controllers, the robotic system nominal model is not included. Actually, the robotic nominal model could be known provided that the uncertainties are all considered to be reasonably modeled. For this reason, CTC could not be neglected in designing controller for complex robotic system due to its good performances [5], even though uncertainties exist in robotic system which would degrade the tracking performance. In order to eliminate the effect of the uncertainties, Song et al. [5] proposed an approach of CTC plus fuzzy compensator, the nominal system was controlled by using CTC method and for uncertain system, and a fuzzy controller acts as compensator. In [6], CTC plus a neural network compensator was proposed and simulations were conducted on a two-link robotic manipulator; furthermore, an experimental example was tested on PUMA560. However, they assumed that system actual accelerations are measurable. Although the accelerations can be obtained through installing accelerometers on the robotic systems, the measurement noises and weight of these extra utilities would both sacrifice the tracking performance of robotic systems [21]. Peng et al. [22] proposed a robust hybrid tracking control for robotic system, which combines computed torque control with a neural network based robust compensator.

In this paper, an adaptive robust quadratic stabilization tracking control scheme, which combines CTC, nonlinear H_∞ control, and VSC for robotic manipulator, is proposed. The constant parameters of nominal system matrix are assumed to be known, which is controlled by CTC method. The uncertainties in robotic system are considered

to be unknown, where VSC and adaptive H_∞ controller are designed to eliminate the effect of the uncertainties and achieve H_∞ tracking performance of closed-loop system. A quadratic stability approach, which allows separate treatment of parametric uncertainties, is used to reduce the conservatism of the conventional robust control approach. Based on Lyapunov stability theorem, the proposed adaptive robust controller can guarantee stability of closed-loop system and a certain tracking performance. Finally, simulation examples on a two-link robotic manipulator are presented to show the efficiency of the proposed method.

The rest of this paper is organized as follows. In Section 2, some preliminaries are addressed, which consist of mathematical notations, dynamical models of robotic manipulators with uncertainties, and detailed explanation related to CTC for robotic manipulators. The design of adaptive robust quadratic stabilization tracking control scheme is given in Section 3 and the robust stability is analyzed. The simulation results are given in Section 4, and the conclusions are drawn in Section 5.

2. Preliminaries

Let $\mathfrak{R}$ be the real number set, let $\mathfrak{R}^n$ be the n-dimensional vector space, and let $\mathfrak{R}^{n\times n}$ be the $n \times n$ real matrix space. The norm of vector $x \in \mathfrak{R}^n$ and that of matrix $A \in \mathfrak{R}^n$ are defined, respectively, as $\|x\| = \sqrt{x^T x}$ and $\|A\| = \mathrm{tr}(A^T A)$. If y is a scalar, then $\|y\|$ denotes the absolute value. $\lambda_{\min}(A)$ and $\lambda_{\max}(A)$ are the minimum and the maximum eigenvalues of matrix A, respectively. $I_{n\times n}$ is $n\times n$ identity matrix. And $\mathrm{sgn}(\cdot)$ is a standard sign function.

Consider a general n-link rigid robot, which takes into account the external disturbances, with the equation of motion given by [2, 7, 14–16]:

$$M(q)\ddot{q} + C(q,\dot{q})\dot{q} + G(q) = \tau + \tau_d, \tag{1}$$

where q, $\dot{q}$, and $\ddot{q} \in \mathfrak{R}^n$ are the joint angular position, velocity, and acceleration vectors of the robot, respectively; $M(q) \in \mathfrak{R}^{n\times n}$ is the symmetric and positive definite inertia matrix; $C(q,\dot{q}) \in \mathfrak{R}^{n\times n}$ is the effect of Coriolis and centrifugal forces; $G(q) \in \mathfrak{R}^n$ is the gravity vector; $\tau \in \mathfrak{R}^n$ is the torque input vector. $\tau_d \in \mathfrak{R}^n$ denotes unknown external disturbance.

The parameters $M(q)$, $C(q,\dot{q})$, and $G(q)$ in the robot dynamic model (1) are functions of physical parameters of systems like links masses, links lengths, moments of inertial, and so on. The precise values of these parameters are difficult to acquire due to measuring errors, environment, and payloads variations. Therefore, here it is assumed that actual values $M(q)$, $C(q,\dot{q})$, and $G(q)$ can be separated as nominal parts denoted by $M_0(q)$, $C_0(q,\dot{q})$, and $G_0(q)$ and uncertain parts denoted by $\Delta M(q)$, $\Delta C(q,\dot{q})$, and $\Delta G(q)$, respectively. These variables satisfy the following relationships:

$$\begin{aligned} M(q) &= M_0(q) + \Delta M(q), \\ C(q,\dot{q}) &= C_0(q,\dot{q}) + \Delta C(q,\dot{q}), \\ G(q) &= G_0(q) + \Delta G(q). \end{aligned} \tag{2}$$

Assumption 1. The bound of uncertainty parameters is known, which can be expressed as

$$\|\Delta M(q)\| \le \delta_M, \qquad \|\Delta C(q,\dot{q})\| \le \delta_C, \qquad \|\Delta G(q)\| \le \delta_G, \tag{3}$$

where δ_M, δ_C, and δ_G are positive constants.

Suppose that dynamical model of robotic system is known precisely and unmodeled dynamics and disturbances are excluded; that is, $\Delta M(q)$, $\Delta C(q,\dot{q})$, $\Delta G(q)$, and τ_d are all zeros. Dynamic model (1) can be converted into the following nominal model:

$$M_0(q)\ddot{q} + C_0(q,\dot{q})\dot{q} + G_0(q) = \tau. \tag{4}$$

According to the CTC method, the control law for robot can be chosen as

$$\tau = M_0(q)\left(\ddot{q}_d - K_v\dot{e} - K_p e\right) + C_0(q,\dot{q})\dot{q} + G_0(q), \tag{5}$$

where e is the tracking error defined by $e = q - q_d$ and q and q_d are the actual and desired joint trajectories, respectively. The coefficients K_v and K_p should be chosen such that all the roots of the polynomial $h(s) = s^2 + K_v s + K_p$ are in the open left-half plane.

Assumption 2. The desired trajectory q_d is continuous and bounded known functions of time with bounded known derivatives up to the second order.

Substituting (5) into (4) yields

$$\ddot{e} + K_v\dot{e} + K_p e = 0. \tag{6}$$

In practical robot systems, it is impossible to ignore the parameters uncertainties and external disturbances. Therefore, applying (5) to manipulator systems (1) yields

$$\begin{aligned} M(q)\left(\ddot{e} + K_v\dot{e} + K_p e\right) = {} & -\Delta M(q)\left(\ddot{q}_d - K_v\dot{e} - K_p e\right) \\ & - \Delta C(q,\dot{q})\dot{q} + \Delta G(q) + \tau_d. \end{aligned} \tag{7}$$

Remark 3. All the parameters in the proposed scheme may be uncertain, which is true in practical situation.

Our objective is to seek a robust control law such that joint motions of robotic system (1) can follow the desired trajectories despite the presence of the system uncertainties and external disturbances.

3. Adaptive Robust Quadratic Stabilization Tracking Control Design

The robust tracking control law designed in this paper comprises of a main controller (CTC) and an adaptive robust compensator. This tracking controller is defined as

$$\tau = \tau_0 + u, \tag{8}$$

where τ_0 is the CTC defined like (5) and u is the robust compensator to be determined later.

Let $x_1 = e$, and let $x_2 = \dot{e}$; then the robotic system error dynamic (8) can be written as

$$\begin{aligned}\dot{x}_1 &= x_2\\ \dot{x}_2 &= M^{-1}(q)\{u - [M_0(q)K_v + \Delta C(q,\dot{q})]\\ &\quad - M_0(q)K_p x_1 - \Delta M(q)\ddot{q}_d\\ &\quad -\Delta C(q,\dot{q})\dot{q}_d - \Delta G(q) + \tau_d\}.\end{aligned} \tag{9}$$

Define the joint variables and parameter variations to be $\omega = \Delta M(q)\ddot{q}_d + \Delta C(q,\dot{q})\dot{q}_d + \Delta G(q)$. According to Assumption 1, we assume that ψ is the bound value of the uncertain term ω so that $\|\omega\| \le \psi$; that is,

$$\begin{aligned}\|\omega\| &= \|\Delta M(q)\ddot{q}_d + \Delta C(q,\dot{q})\dot{q}_d + \Delta G(q)\|\\ &\le \delta_M\|\ddot{q}_d\| + \delta_C\|\dot{q}_d\| + \delta_G \le \psi.\end{aligned} \tag{10}$$

Remark 4. According to Assumption 2, $\ddot{q}$ and $\dot{q}$ are both bounded. Therefore, (10) is correct. However, the upper bound ψ cannot be obtained directly, in this paper, an adaptive mechanism is adopted to estimate the upper bound ψ.

Then, the error dynamic state-space equation has the following form:

$$\dot{x} = Ax + B(u - \omega + \tau_d), \tag{11}$$

where $x = [x_1^T, x_2^T]^T$, $A = A_0 + \Delta A$, and $B = (B_0 + \Delta B)M_0^{-1}(q)$, with

$$\begin{aligned}A_0 &= \begin{bmatrix} 0_{n\times n} & I_{n\times n}\\ -K_p & -K_v\end{bmatrix},\\ \Delta A &= \begin{bmatrix} 0_{n\times n} & 0_{n\times n}\\ M^{-1}(q)\Delta M(q)K_p & M^{-1}(q)(\Delta M(q)K_v - \Delta C(q,\dot{q}))\end{bmatrix},\\ B_0 &= \begin{bmatrix} 0_{n\times n}\\ I_{n\times n}\end{bmatrix}, \qquad \Delta B = \begin{bmatrix} 0_{n\times n}\\ -M^{-1}(q)\Delta M(q)\end{bmatrix}.\end{aligned} \tag{12}$$

Assumption 5. ΔA and ΔB represent the time-varying parametric uncertainties having the following structure:

$$[\Delta A, \Delta B] = DF[E_a, E_b], \tag{13}$$

where D, E_a, and E_b are known constant matrix appropriate dimensions and $F \in \Re^{2n\times 2n}$ is unknown Lebesgue measurable matrix which is bounded as follows:

$$F^T F \le I_{2n\times 2n}. \tag{14}$$

Suppose there exists a matrix $P = P^T > 0$ and positive numbers γ, ξ, μ, and ζ, such that the following matrix inequality holds:

$$\begin{aligned}&PA_0 + A_0^T P + Q + PB_0\left(\frac{1}{\gamma^2}I_{n\times n} - 2R^{-1}\right)B_0^T P\\ &\quad + \left(\frac{1}{\xi^2} + \mu^2\right)PDD^T P + \frac{1}{\mu^2}E_a^T E_a + \frac{1}{\zeta^2}PD^T DP\\ &\quad + \zeta^2 PB_0 R^{-1}E_b^T E_b R^{-1}B_0^T P \le 0\end{aligned} \tag{15}$$

and $\operatorname{sgn}(B_0^T Px) = \operatorname{sgn}(B^T Px)$, where $Q = Q^T > 0$ is a prescribed weighting matrix and R is some positive gains.

The robust compensator law u in (8) is designed as

$$u = u_h + u_s \tag{16}$$

with

$$u_h = -M_0(q)R^{-1}B_0^T Px, \tag{17}$$

$$u_s = -\hat{\psi}\operatorname{sgn}\left(B_0^T Px\right), \tag{18}$$

where $\hat{\psi}$ is an online estimated value of the upper bound ψ. Since the positive constants δ_M, δ_C, and δ_G are unknown, the following adaptive algorithm is adopted to estimate the parameters uncertainty ψ:

$$\dot{\hat{\psi}} = -\frac{1}{\eta}\left(B_0^T Px\right)^T \operatorname{sgn}\left(B_0^T Px\right). \tag{19}$$

Remark 6. The quadratic stability constraint is obtained by the matrix inequality (15). Therefore, the design problem becomes an optimization problem that minimizes the upper bound of the performance indices subject to the matrix inequality constraint (15).

From the above considerations, the following theorem can be stated as follows.

Theorem 7. *Consider the robotic system dynamic* (1) *and suppose that Assumptions 1–5 are satisfied and the control law τ is provided by* (8), *where τ_0 is CTC like* (5) *and u is the robust compensator designed as* (16) *with VSC and H_∞ optimal controller designing as* (18) *and* (17), *respectively. Then, the proposed control law can guarantee that (i) all the variables of the closed-loop system are bounded and (ii) the following H_∞ tracking performance is achieved:*

$$\int_0^T \|x(t)\|_Q^2\,dt \le \rho^2\int_0^T \|\overline{\tau}_d\|^2\,dt + \beta, \tag{20}$$

where $\overline{\tau}_d = M_0^{-1}(q)\tau_d$ and ρ is an attenuation level and defined thereafter, $\beta \in \Re$.

Proof. Let us select a Lyapunov function candidate:

$$V = \frac{1}{2}x^T Px + \frac{1}{2\eta}\tilde{\psi}^T\tilde{\psi}, \tag{21}$$

where $\tilde{\psi} = \psi - \hat{\psi}$. Differentiating the above equation and substituting the state-space equation (9) yield

$$\begin{aligned}\dot{V} &= \frac{1}{2}\dot{x}^T Px + \frac{1}{2}x^T P\dot{x} + \frac{1}{\eta}\tilde{\psi}^T\dot{\tilde{\psi}} \\ &= \frac{1}{2}\left[Ax + B\left(u - \omega + \tau_d\right)\right]^T Px \\ &\quad + \frac{1}{2}x^T P\left[Ax + B\left(u - \omega + \tau_d\right)\right] + \frac{1}{\eta}\tilde{\psi}^T\dot{\tilde{\psi}} \\ &= \frac{1}{2}x^T\left(PA_0 + A_0^T P\right)x + x^T PDFE_a x \\ &\quad + (u-\omega)^T B^T Px + \tau_d^T B^T Px + \frac{1}{\eta}\tilde{\psi}^T\dot{\tilde{\psi}}.\end{aligned} \tag{22}$$

Substituting the matrix inequality (15) into (22), we obtain

$$\begin{aligned}\dot{V} \le -\frac{1}{2}x^T &\left\{Q + PB_0\left(\frac{1}{\gamma^2}I_{n\times n} - 2R^{-1}\right)B_0^T P\right. \\ &+ \left(\frac{1}{\xi^2} + \mu^2\right)PDD^T P + \frac{1}{\mu^2}E_a^T E_a \\ &\left. + \zeta^2 PB_0 R^{-1}E_b^T E_b R^{-1}B_0^T P + \frac{1}{\zeta^2}PD^T DP\right\}x \\ &+ x^T PDFE_a x + u_h^T B^T Px + \tau_d^T B^T Px \\ &+ \left(u_s - \omega\right)^T B^T Px + \frac{1}{\eta}\tilde{\psi}^T\dot{\tilde{\psi}}.\end{aligned} \tag{23}$$

Considering the controller u_s in (18) and Assumption 2, we obtain

$$\begin{aligned}&\left(u_s - \omega\right)^T B^T Px + \frac{1}{\eta}\tilde{\psi}^T\dot{\tilde{\psi}} \\ &\quad \le -\hat{\psi}^T\left|B^T Px\right| + \psi^T\left|B^T Px\right| + \frac{1}{\eta}\tilde{\psi}^T\dot{\tilde{\psi}} \\ &\quad \le \tilde{\psi}^T\left|B^T Px\right| - \tilde{\psi}^T\left|B^T Px\right| = 0.\end{aligned} \tag{24}$$

Considering the H_∞ controller u_h in (17) and substituting (24) into (23) yield

$$\begin{aligned}\dot{V} \le -\frac{1}{2}x^T &\left\{Q + PB_0\left(\frac{1}{\gamma^2}I_{n\times n} - 2R^{-1}\right)B_0^T P\right. \\ &+ \left(\frac{1}{\xi^2} + \mu^2\right)PDD^T P + \frac{1}{\mu^2}E_a^T E_a \\ &\left. + \zeta^2 PB_0 R^{-1}E_b^T E_b R^{-1}B_0^T P + \frac{1}{\zeta^2}PD^T DP\right\}x \\ &+ x^T PDFE_a x + u_h^T B^T Px + \tau_d^T B^T Px \\ = -\frac{1}{2}x^T &\left\{Q + PB_0\left(\frac{1}{\gamma^2}I_{n\times n} - 2R^{-1}\right)B_0^T P\right. \\ &+ \left(\frac{1}{\xi^2} + \mu^2\right)PDD^T P + \frac{1}{\mu^2}E_a^T E_a \\ &\left. + \zeta^2 PB_0 R^{-1}E_b^T E_b R^{-1}B_0^T P + \frac{1}{\zeta^2}PD^T DP\right\}x \\ &+ x^T PDFE_a x - x^T PB_0 R^{-1}B_0^T Px \\ &- x^T PB_0 R^{-1}E_b^T F^T D^T Px \\ &+ \overline{\tau}_d^T B_0^T Px + \overline{\tau}_d^T E_b^T F^T D^T Px \\ = -\frac{1}{2}&\left(\frac{1}{\gamma}B_0^T Px - \gamma\overline{\tau}_d\right)^T\left(\frac{1}{\gamma}B_0^T Px - \gamma\overline{\tau}_d\right) \\ &- \frac{1}{2}\left(\frac{1}{\xi}F^T D^T Px - \xi E_b\overline{\tau}_d\right)^T \\ &\cdot\left(\frac{1}{\xi}F^T D^T Px - \xi E_b\overline{\tau}_d\right) \\ &- \frac{1}{2}\left(\mu D^T Px - \frac{1}{\mu}FE_a x\right)^T \\ &\cdot\left(\mu D^T Px - \frac{1}{\mu}FE_a x\right) \\ &- \frac{1}{2}\left(\zeta FE_b R^{-1}B_0^T Px - \frac{1}{\zeta}D^T Px\right)^T \\ &\cdot\left(\zeta FE_b R^{-1}B_0^T Px - \frac{1}{\zeta}D^T Px\right) \\ &- \frac{1}{2}\frac{1}{\xi^2}x^T PD^T\left(I_{2n\times 2n} - F^T F\right)DPx \\ &- \frac{1}{2}\frac{1}{\mu^2}x^T E_a^T\left(I_{2n\times 2n} - F^T F\right)E_a x \\ &- \frac{1}{2}\zeta^2 x^T PB_0 R^{-1}E_b^T\left(I_{2n\times 2n} - F^T F\right)E_b R^{-1}B_0^T Px \\ &+ \frac{1}{2}\gamma^2\overline{\tau}_d^T\overline{\tau}_d + \frac{1}{2}\xi^2\overline{\tau}_d^T E_b^T E_b\overline{\tau}_d - \frac{1}{2}x^T Qx.\end{aligned} \tag{25}$$

Then, according to Assumption 5, we have

$$\begin{aligned}\dot{V} &\le \frac{1}{2}\gamma^2\overline{\tau}_d^T\overline{\tau}_d + \frac{1}{2}\xi^2\overline{\tau}_d^T E_b^T E_b\overline{\tau}_d - \frac{1}{2}x^T Qx \\ &= \frac{1}{2}\rho^2\overline{\tau}_d^T\overline{\tau}_d - \frac{1}{2}x^T Qx,\end{aligned} \tag{26}$$

where $\rho^2 = \gamma^2 + \xi^2\|E_b\|^2$.

Integrating the above inequality from $t = 0$ to $t = T$ yields

$$V(T) - V(0) \le \frac{1}{2}\rho^2\int_0^T \overline{\tau}_d^T\overline{\tau}_d\,dt - \frac{1}{2}\int_0^T x^T Qx\,dt. \tag{27}$$

Since $V(T) \ge 0$, the above inequality leads to the following L_2 criterion:

$$\frac{1}{2}\int_0^T x^T Qx\,dt \le V(0) + \frac{1}{2}\rho^2\int_0^T \|\overline{\tau}_d\|^2 dt. \tag{28}$$

Because Q is a positive definite matrix, the fact that $\lambda_{\min}(Q)x^T x \le x^T Qx$ implies

$$\int_0^T \|x(t)\|^2 dt \le \frac{2}{\lambda_{\min}(Q)}V(0) + \frac{\rho^2}{\lambda_{\min}(Q)}\int_0^T \|\overline{\tau}_d\|^2 dt. \tag{29}$$

Using Barbalat's lemma [27], it can be concluded that the tracking error converges to zero as $t \to \infty$.

Since $\tau_d \in L_2[0,+\infty)$ and $M_0^{-1}(q)$ is bounded, there is also $\overline{\tau}_d = M_0^{-1}(q)\tau_d \in L_2[0,+\infty)$. That means that there is a finite constant $\overline{M}_d > 0$ such that $\int_0^\infty \|\overline{\tau}_d\|^2 dt \le \overline{M}_d$; then we have

$$\|x\| \le \sqrt{\frac{x^T(0)x(0) + \widetilde{\psi}^T(0)\widetilde{\psi}(0) + \rho^2\overline{M}_d}{\lambda_{\min}(Q)}}, \tag{30}$$

where $x(0)$ and $\widetilde{\psi}(0)$ are the initial values of x and $\widetilde{\psi}$, respectively. It can be concluded that all signals of the closed-loop system are bounded. □

Remark 8. Since the VSC controller (18) contains the sign function, direct application of such control signals to the robotic system (1) may result in chattering caused by the signal discontinuity. To overcome this problem, the control law is smoothed out within a thin boundary layer ϕ_i [18, 28] by replacing the sign function by a saturation function defined as

$$\operatorname{sat}\left(\frac{\left(B_0^T Px\right)_i}{\phi_i}\right) = \begin{cases} \operatorname{sgn}\left(\dfrac{\left(B_0^T Px\right)_i}{\phi_i}\right), & \left\|\dfrac{\left(B_0^T Px\right)_i}{\phi_i}\right\| > 1 \\ \dfrac{\left(B_0^T Px\right)_i}{\phi_i}, & \left\|\dfrac{\left(B_0^T Px\right)_i}{\phi_i}\right\| \le 1. \end{cases} \tag{31}$$

Remark 9. In this paper, the VSC u_s is designed to eliminate the effect of the uncertainties, and the robust H_∞ controller u_h is employed to achieve the desired H_∞ tracking performance. In this way, global asymptotic stability and H_∞ tracking performance of closed-loop systems are achieved.

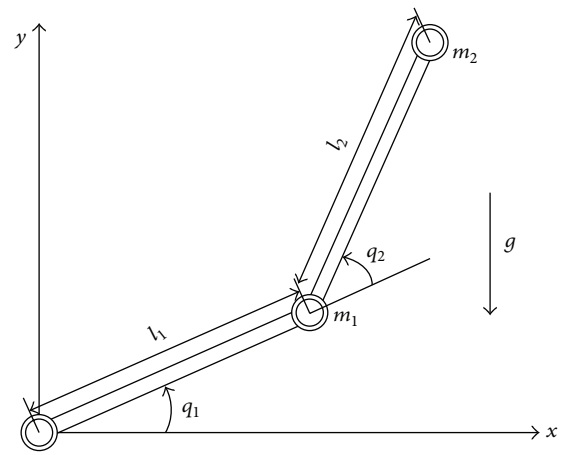

Figure 1: Diagram of a two-link robot manipulator.

Remark 10. From (29), it is clear that $\int_0^T \|x(t)\|^2 dt < \infty$ as $T \to \infty$; that is, $x \in L_2$ is satisfied. The boundedness of x in (30) implies that $x \in L_\infty$. From the closed-loop dynamic equation (15) and boundedness of x and τ_d, one can get $\dot{x} \in L_\infty$. It implies that $x \in L_2 \bigcap L_\infty$ and $\dot{x} \in L_\infty$; thus, $\lim_{t\to\infty} x(t) = 0$ is achieved [23]. Therefore, the closed-loop system is globally asymptotically stable.

Remark 11. From (28), if the system start with the initial condition $V(0) = 0$, that is, $x(0) = 0$ and $\widetilde{\psi}(0) = 0$, the L_2 gain must satisfy

$$\sup_{\overline{\tau}_d \in [0,T]} \frac{\|x\|}{\|\overline{\tau}_d\|} \le \frac{\rho}{\lambda_{\min}(Q)}, \tag{32}$$

where $\|x\|^2 = \int_0^T x^T x\,dt$ and $\|\overline{\tau}_d\|^2 = \int_0^T \overline{\tau}_d^T\overline{\tau}_d\,dt$. Inequality (29) indicates that when smaller attenuation levels ρ are specified, a better tracking performance can be achieved.

4. Simulation Example

To verify the theoretical results, simulations were carried out in two degrees of freedom robotic manipulator as shown in Figure 1 described by [22, 24]:

$$\begin{aligned} M(q) &= \begin{bmatrix} m_1 l_1^2 + m_2\left(l_1^2 + l_2^2 + 2l_1 l_2 c_2\right) & m_2 l_2^2 + m_2 l_1 l_2 c_2 \\ m_2 l_2^2 + m_2 l_1 l_2 c_2 & m_2 l_2^2 \end{bmatrix}, \\ C(q,\dot{q}) &= \begin{bmatrix} -2m_2 l_1 l_2 s_2 \dot{q}_2 & m_2 l_1 l_2 s_2 \dot{q}_2 \\ m_2 l_1 l_2 s_2 \dot{q}_2 & 0 \end{bmatrix}, \\ G(q) &= \begin{bmatrix} m_2 l_2 g c_{12} + (m_1 + m_2) l_1 g c_1 \\ m_2 l_2 g c_{12} \end{bmatrix}, \end{aligned} \tag{33}$$

where m_1 and m_2 are the mass of link 1 and link 2, respectively; l_1 and l_2 are the length of link 1 and link 2, respectively; s_i denotes $\sin(q_i)$, c_i denotes $\cos(q_i)$, and c_{ij} denotes $\cos(q_i + q_j)$, for $i = 1, 2$ and $j = 1, 2$. g is acceleration of gravity.

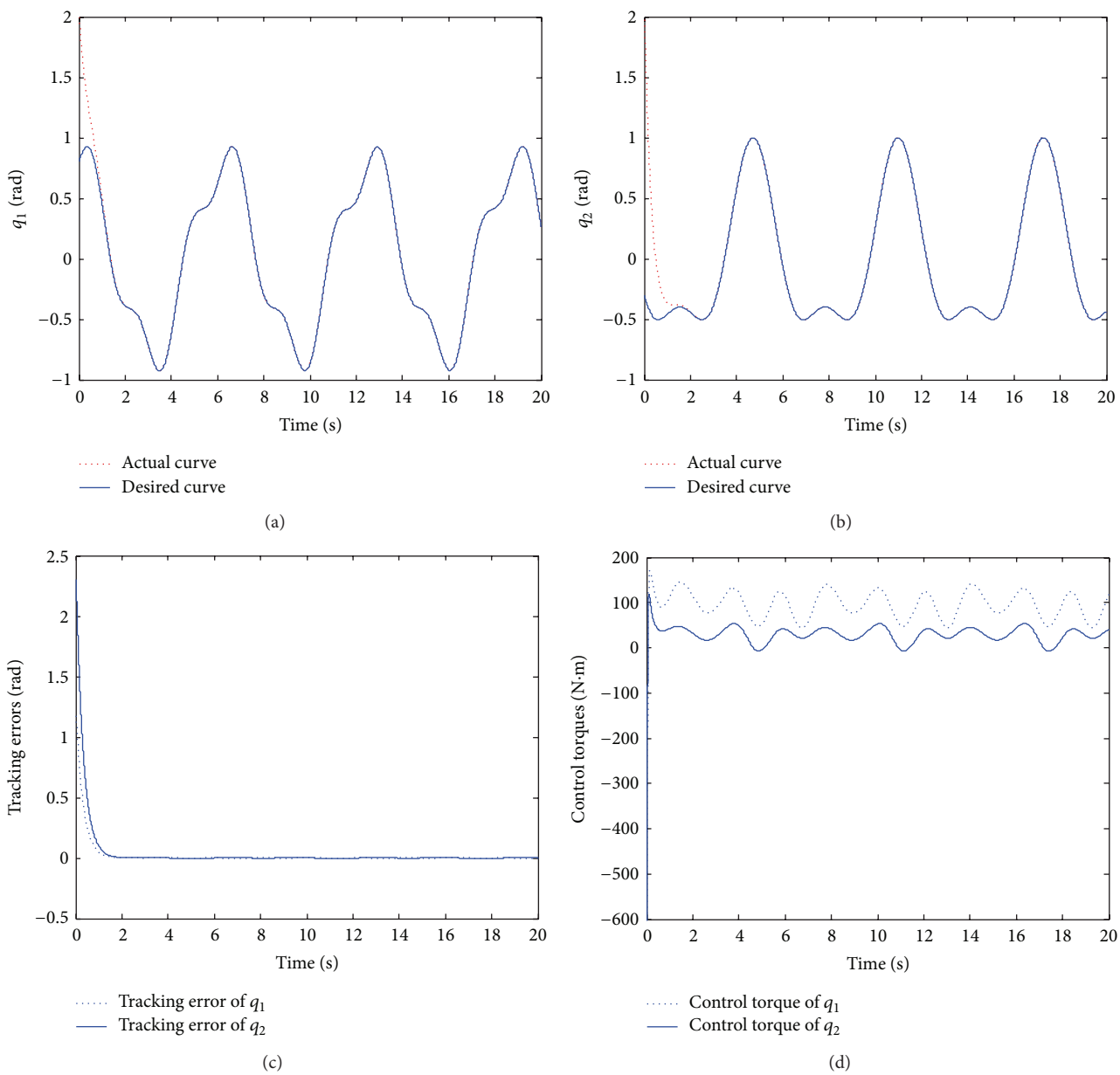

FIGURE 2: CTC for robotic manipulator without uncertainties and disturbances. (a) Tracking curve of q_1, (b) tracking curve of q_2, (c) tracking errors, and (d) control torques.

4.1. Design Procedure. To summarize the analysis in Section 3, the step-by-step procedures of the adaptive robust quadratic stabilization tracking control for robotic system are outlined as follows.

Step 1. Select controller gains $K_p = 150I_{2\times2}$ and $K_v = 50I_{2\times2}$ such as

$$A_0 = \begin{bmatrix} 0_{2\times2} & I_{2\times2} \\ -150I_{2\times2} & -50I_{2\times2} \end{bmatrix} \tag{34}$$

is a Hurwitz matrix.

Step 2. Choose proper parameters,

$$\begin{aligned} &Q = 20I_{4\times4}, \qquad R = 10I_{2\times2}, \qquad \gamma = 0.4, \\ &\xi = 1, \qquad \mu = 1, \qquad \zeta = 1, \\ &D = [0, 0, 5, 5]^T_{1\times4}, \qquad E_a = [0, 0, 10, 10]_{1\times4}, \\ &E_b = [1, 1]_{1\times4}. \end{aligned} \tag{35}$$

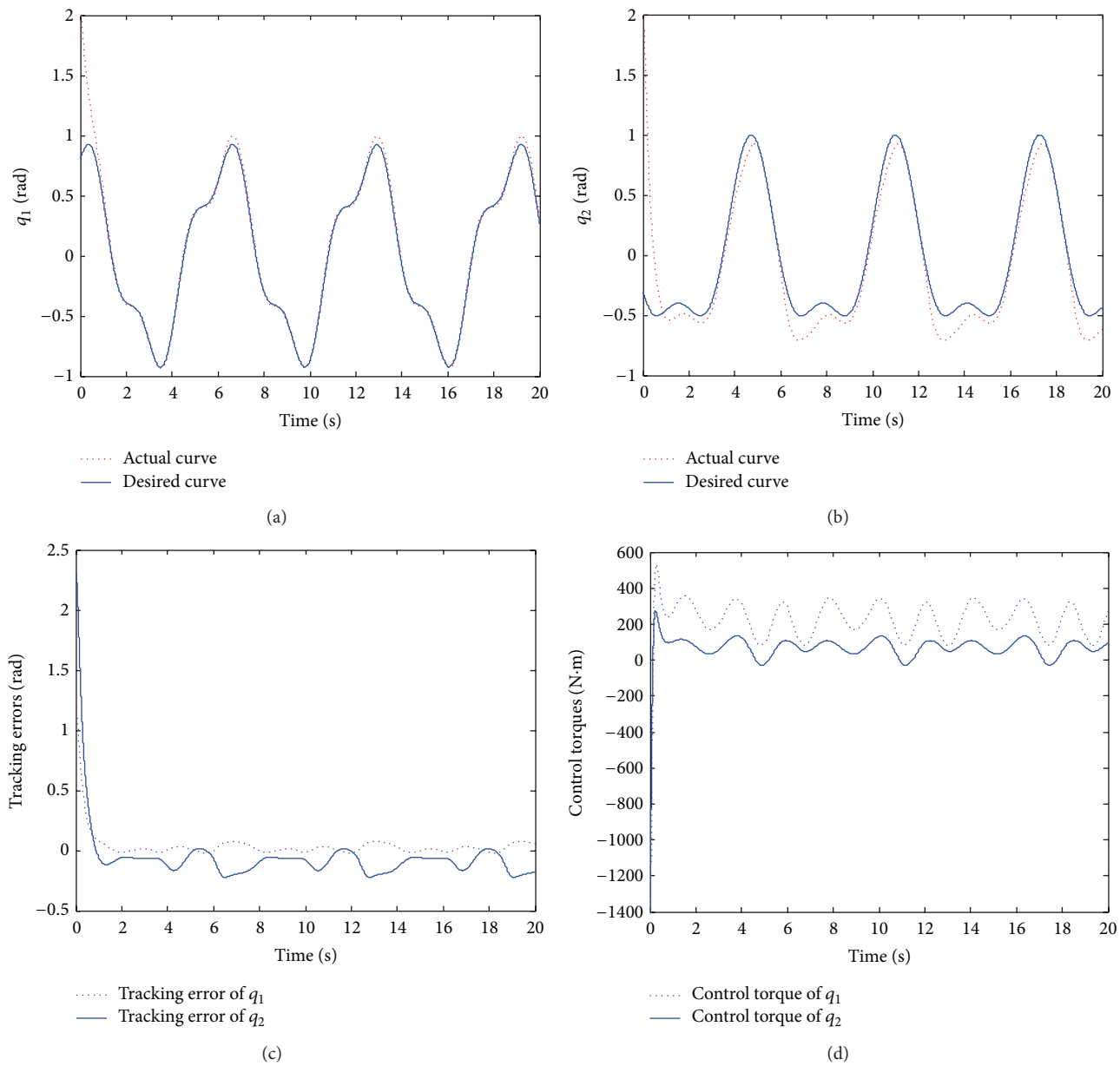

FIGURE 3: CTC for robotic manipulator with uncertainties and disturbances. (a) Tracking curve of q_1, (b) tracking curve of q_2, (c) tracking errors, and (d) control torques.

Solve P from matrix inequality (15),

$$P = \begin{bmatrix} 16.8406 & -16.5973 & 0.0062 & -0.0604 \\ -16.5973 & 16.8406 & -0.0604 & 0.0062 \\ 0.0062 & -0.0604 & 0.1352 & -0.0654 \\ -0.0604 & 0.0062 & -0.0654 & 0.1352 \end{bmatrix}. \quad (36)$$

Step 3. Select the appropriate positive constants; then the robust quadratic stabilization tracking control law can be obtained from Theorem 7.

4.2. Simulation Results. In this section, the proposed control approach is applied to control a two-link manipulator. The dynamic equation and parameters of the manipulator are similar to those in [22]. The nominal parameters of the robot used for simulation are $m_1 = m_2 = 4\,\text{kg}$ and $l_1 = l_2 = 1\,\text{m}$, $g = 9.8\,\text{m/s}^2$, while actual parameters of robot are chosen as $m_1 = m_2 = 8\,\text{kg}$ and $l_1 = l_2 = 1.2\,\text{m}$ to introduce the parameters uncertainties. The desired trajectories to be tracked are $q_{d1} = 0.8\cos(t) + 0.2\sin(3t)$, $q_{d2} = -0.3\cos(2t) - 0.7\sin(t)$. The initial conditions are $q_1(0) = q_2(0) = 2\,\text{rad}$ and $\dot{q}_1(0) = \dot{q}_2(0) = 0\,\text{rad/s}$. For the purpose of comparison, simulation studies in three cases are conducted. To show the robustness of the controller, we choose the exogenous disturbances $\tau_d = [5e^{-t}, -5e^{-t}]^T$.

Case 1. Firstly, the conventional CTC (6) for controlling robotic system without model uncertainties and disturbances

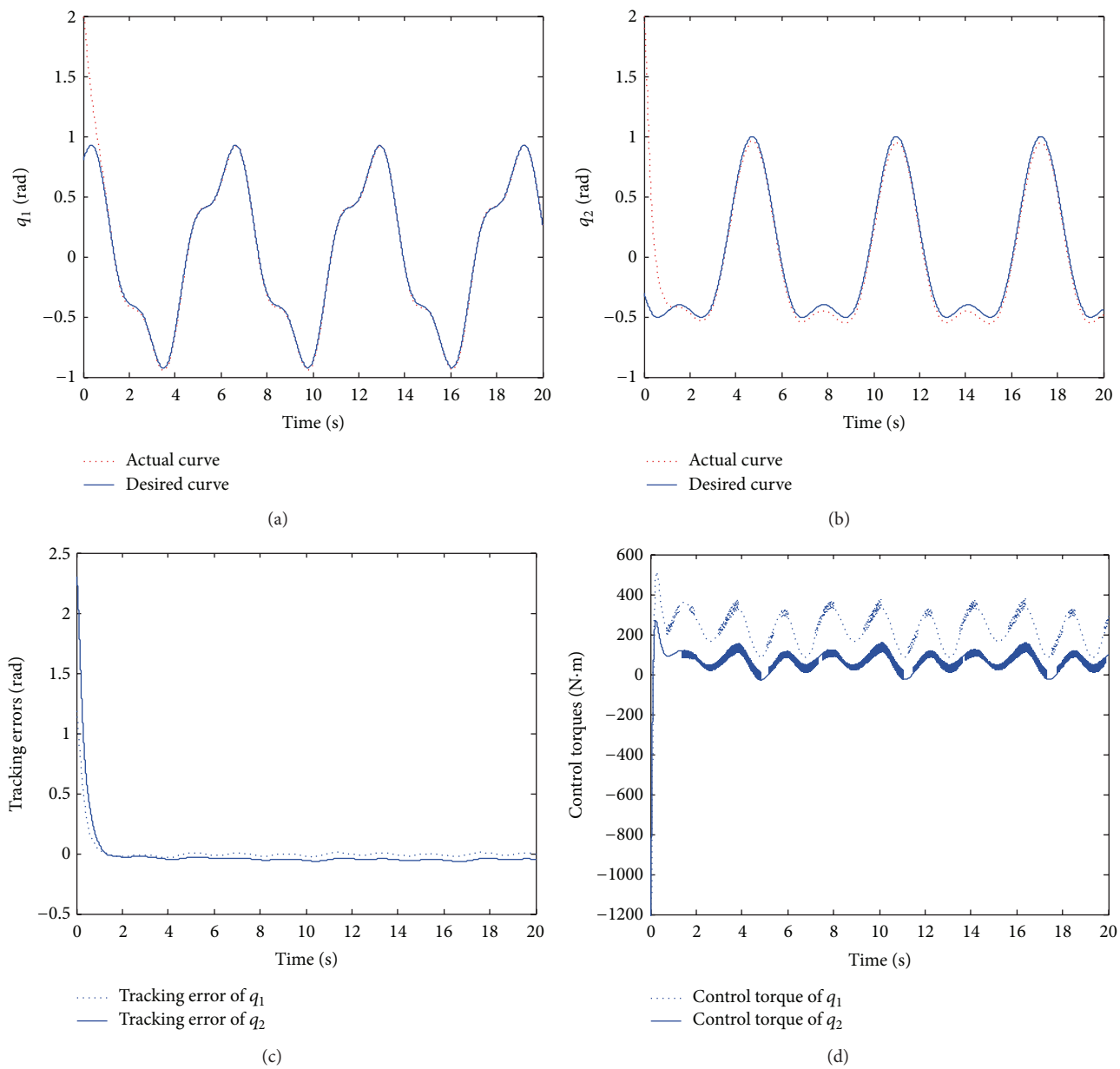

FIGURE 4: The proposed adaptive robust quadratic stabilization tracking control for robotic manipulator. (a) Tracking curve of q_1, (b) tracking curve of q_2, (c) tracking errors, and (d) control torques.

is demonstrated; that is, the nominal parameters are used to design the CTC controller and obtain the robotic manipulator model. Figure 2 shows the results of tracking performance. It is observed that CTC can track the given trajectories perfectly under precise known model parameters.

Case 2. The conventional CTC (5) for controlling robotic system under model uncertainties and disturbances is demonstrated. To introduce the system uncertainties, the nominal parameters are used to design the CTC controller, while the actual parameters are used to obtain the robotic manipulator model. Furthermore, the exogenous disturbances are added. Figure 3 shows the simulation results of CTC. It can be seen that the controller cannot drive the joints to reach the desired positions and steady-state tracking error exist.

Case 3. Under the same conditions as in Case 2, the proposed adaptive robust quadratic stabilization tracking controller is used to control robotic manipulator. The control procedure is described in foregoing subsection. Figure 4 shows the tracking results. It is observed that the tracking error decreases quickly, and the effects of uncertainties are successfully compensated by the adaptive robust control term.

To quantify the control performance, the root-mean square average of tracking error (based on the L_2 norm of the tracking errors e) is given as follows [14, 22, 24, 29, 30]:

$$L_2(e) = \sqrt{\frac{1}{T}\int_0^T e^T e\, dt}, \tag{37}$$

Table 1: L_2 norm for tracking errors.

Controller	$L_2(e_1)$	$L_2(e_2)$
CTC	5.8827	11.0905
Proposed	3.7336	7.4509

where T represents the total simulation time. Table 1 shows the L_2 error norms for CTC method (Case 2) and the proposed adaptive robust quadratic stabilization tracking control method (Case 3). Note that a smaller L_2 norm represents a better performance.

From Figures 3 and 4 and Table 1, the results thus demonstrate that the proposed robust quadratic stabilization tracking control can effectively control the robotic system in the presence of uncertainties and disturbances and present the better transient response and the smaller tracking error norm in comparison to the CTC method.

5. Conclusions

This paper presents an adaptive robust quadratic stabilization tracking control scheme for robotic system with mathematical derivations of global stability. The idea is based on combining a CTC controller plus an adaptive robust compensator. The CTC controller acts as the main controller, and the adaptive robust compensator is used to handle system uncertainties and external disturbances. In addition, an H_∞ controller is used to achieve a certain tracking performance. The adaptive hybrid control method demonstrated robust and effective control performance on robotic system having uncertainties with good disturbance rejection. As a future work, the proposed adaptive robust controller will be proven experimentally and applied to other kinds of electromechanical systems.

Conflict of Interests

The authors declare that there is no conflict of interests regarding the publication of this paper.

Acknowledgments

This work was supported by the Specialized Research Fund for the Doctoral Program of Higher Education of China (no. 20124101120001), China Postdoctoral Science Foundation (no. 2013M541992), National Natural Science Foundation of China (no. 61104022 and no. 61374128), and Key Project for Science and Technology of the Education Department of Henan Province (no. 14A413009 and no. 14A410001).

References

[1] W. J. Book, "Modeling, design, and control of flexible manipulator arms: a tutorial review," in *Proceedings of the 29th IEEE Conference on Decision and Control*, pp. 500–506, IEEE Press, San Francisco, Calif, USA, December 1990.

[2] F. L. Lewis, S. Jagannathan, and A. Yesildirek, *Neural Network Control of Robot Manipulators and Nonlinear Systems*, Philadelphia, Pa, USA, SIAM Press, 2002.

[3] J. Y. S. Luh, "Conventional controller design for industrial robots—a tutorial," *IEEE Transactions on Systems, Man and Cybernetics*, vol. 13, no. 3, pp. 298–316, 1983.

[4] R. H. Middleton and G. C. Goodwin, "Adaptive computed torque control for rigid link manipulations," *Systems & Control Letters*, vol. 10, no. 1, pp. 9–16, 1988.

[5] Z. Song, J. Yi, D. Zhao, and X. Li, "A computed torque controller for uncertain robotic manipulator systems: fuzzy approach," *Fuzzy Sets and Systems*, vol. 154, no. 2, pp. 208–226, 2005.

[6] Y. Zuo, Y. Wang, X. Liu et al., "Neural network robust H_∞ tracking control strategy for robot manipulators," *Applied Mathematical Modelling*, vol. 34, no. 7, pp. 1823–1838, 2010.

[7] R. Ortega and M. W. Spong, "Adaptive motion control of rigid robots: a tutorial," *Automatica*, vol. 25, no. 6, pp. 877–888, 1989.

[8] S. Battilotti and L. Lanari, "Adaptive disturbance attenuation with global stability for rigid and elastic joint robots," *Automatica*, vol. 33, no. 2, pp. 239–243, 1997.

[9] O. Kaynak, K. Erbatur, and M. Ertugrul, "The fusion of computationally intelligent methodologies and sliding-mode control—a survey," *IEEE Transactions on Industrial Electronics*, vol. 48, no. 1, pp. 4–17, 2001.

[10] K. S. Yeung and Y. P. Chen, "A new controller design for manipulators using the theory of variable structure systems," *IEEE Transactions on Automatic Control*, vol. 33, no. 2, pp. 200–206, 1988.

[11] S. Lin and A. A. Goldenberg, "Robust damping control of mobile manipulators," *IEEE Transactions on Systems, Man, and Cybernetics B: Cybernetics*, vol. 32, no. 1, pp. 126–132, 2002.

[12] F. Alonge, F. d'Ippolito, and F. M. Raimondi, "Globally convergent adaptive and robust control of robotic manipulators for trajectory tracking," *Control Engineering Practice*, vol. 12, no. 9, pp. 1091–1100, 2004.

[13] Y. Wang, J. Peng, W. Sun, H. Yu, and H. Zhang, "Robust adaptive tracking control of robotic systems with uncertainties," *Journal of Control Theory and Applications*, vol. 6, no. 3, pp. 281–286, 2008.

[14] J. J. Rubio, Z. Zamudio, J. Pacheco, and D. M. Vargas, "Proportional derivative control with inverse dead-zone for pendulum systems," *Mathematical Problems in Engineering*, vol. 2013, Article ID 173051, 9 pages, 2013.

[15] C. Torres, J. J. Rubio, C. Aguilar-Ibáñez, and J. H. Pérez-Cruz, "Stable optimal control applied to a cylindrical robotic arm," *Neural Computing and Applications*, vol. 24, no. 3-4, pp. 937–944, 2014.

[16] S. Galvan, M. A. Moreno-Armendariz, J. J. Rubio, F. I. Rodriguez, W. Yu, and C. F. A. Ibáñez, "Dual PD control regulation with nonlinear compensation for a ball and plate system," *Mathematical Problems in Engineering*. In press.

[17] Y. C. Hsu, G. Chen, and H. X. Li, "A fuzzy adaptive variable structure controller with applications to robot manipulators," *IEEE Transactions on Systems, Man, and Cybernetics B: Cybernetics*, vol. 31, no. 3, pp. 331–340, 2001.

[18] H. Hu and P.-Y. Woo, "Fuzzy supervisory sliding-mode and neural-network control for robotic manipulators," *IEEE Transactions on Industrial Electronics*, vol. 53, no. 3, pp. 929–940, 2006.

[19] F. C. Sun, Z. Q. Sun, and G. Feng, "An adaptive fuzzy controller based on sliding mode for robot manipulators," *IEEE Transactions on Systems, Man, and Cybernetics B: Cybernetics*, vol. 29, no. 5, pp. 661–667, 1999.

[20] F. L. Lewis, K. Liu, and A. Yesildirek, "Neural net robot controller with guaranteed tracking performance," *IEEE Transactions on Neural Networks*, vol. 6, no. 3, pp. 703–715, 1995.

[21] Z. Liu and C. Li, "Fuzzy neural networks quadratic stabilization output feedback control for biped robots via H_∞ approach," *IEEE Transactions on Systems, Man, and Cybernetics B: Cybernetics*, vol. 33, no. 1, pp. 67–84, 2003.

[22] J. Peng, J. Wang, and Y. Wang, "Neural network based robust hybrid control for robotic system: an H_∞ approach," *Nonlinear Dynamics*, vol. 65, no. 4, pp. 421–431, 2011.

[23] F. Sun, Z. Sun, and P.-Y. Woo, "Neural network-based adaptive controller design of robotic manipulators with an observer," *IEEE Transactions on Neural Networks*, vol. 12, no. 1, pp. 54–67, 2001.

[24] J. J. Rubio, "Modified optimal control with a backpropagation network for robotic arms," *IET Control Theory & Applications*, vol. 6, no. 14, pp. 2216–2225, 2012.

[25] Y. C. Chang, "Neural network-based H_∞ tracking control for robotic systems," *IEE Proceedings—Control Theory and Applications*, vol. 147, no. 3, pp. 303–311, 2000.

[26] R.-J. Wai, "Tracking control based on neural network strategy for robot manipulator," *Neurocomputing*, vol. 51, pp. 425–445, 2003.

[27] J. J. E. Slotine and W. Li, *Applied Nonlinear Control*, Prentice-Hall, Englewood Cliffs, NJ, USA, 1991.

[28] C. Aguilar-Ibáñez, J. A. Mendoza-Mendoza, M. Suarez-Castañon, and J. Davila, "A nonlinear robust PI controller for an uncertain system," *International Journal of Control*, 2014.

[29] J. J. Rubio, G. Gutierrez, J. Pacheco, and H. Pérez-Cruz, "Comparison of three proposed controls to accelerate the growth of the crop," *International Journal of Innovative Computing, Information and Control*, vol. 7, no. 7, pp. 4097–4114, 2011.

[30] J. J. Rubio, L. A. Soriano, and W. Yu, "Dynamic model of a wind turbine for the electric energy generation," *Mathematical Problems in Engineering*, vol. 2014, Article ID 409268, 8 pages, 2014.