Hindawi
Journal of Engineering
Volume 2020, Article ID 2950789, 22 pages
https://doi.org/10.1155/2020/2950789

Research Article

Performance Indicators for Spare Parts and Maintenance Management: An Analytical Study

Oumaima Bounou, Abdellah El Barkany, and Ahmed El Biyaali

Faculty of Sciences and Techniques, Mechanical Engineering Laboratory, Sidi Mohammed Ben Abdellah University, FEZ, Morocco

Correspondence should be addressed to Oumaima Bounou; oumaima.bounou@usmba.ac.ma

Received 11 June 2020; Accepted 11 October 2020; Published 28 October 2020

Academic Editor: Ching-Chow Yang

Copyright © 2020 Oumaima Bounou et al. This is an open access article distributed under the Creative Commons Attribution License, which permits unrestricted use, distribution, and reproduction in any medium, provided the original work is properly cited.

A properly implemented maintenance management system has an impact at different levels. Maintenance is defined as the set of actions to maintain a property in a specified state. The unavailability of the spare parts required, to carry out the maintenance intervention, causes an extension of the inactivity time of the installation. On the contrary, an excessive stock of spare parts confines enormous capital and entails an enormous cost of ownership. According to the literature already made, we have directed in our work to propose a model of joint management of maintenance and spare parts based on stochastic-deterministic batch Petri networks. We studied this model by simulation using a graphical interface dedicated to the graphical tool used. So, we present, in this paper, the analytical study of the model by defining the performance indicators and viewing the influence of system parameters on these indicators. The main stages of the analytical study are developing the μ-marking graph, the associated Markov process which gives the associated transition matrix, and the definition of performance indicators using the probability distribution of the states. We deal with an application of the analytical evaluation of the proposed model. We end this article with an analysis and synthesis.

1. Introduction

A properly implemented maintenance management system has an impact at different levels: infrastructure, resources (human and material), management (spare parts, inventory, etc.) and security, as well as competitiveness criteria, quality, price, time, flexibility, service, and reputation [1]. Maintenance is defined as all of the actions enabling a property to be maintained or restored to a specified state or able to provide a specific service [1]. Corrective maintenance is very costly because it causes unnecessary machine time [2]. The unavailability of the desired spare parts for the maintenance intervention causes an extension of the inactivity time of the installation. On the contrary, an excessive stock of spare parts confines enormous capital and leads to an enormous cost of ownership [2].

According to the review paper [3] on the joint management of spare parts and maintenance, the parameters, considered in some models, are demand forecasts, time of maintenance intervention, failure number, maintenance policy, maintenance frequency, spare parts' inventories, repair, and inventory levels. Also, it is found that the preventive maintenance needs are considered in most cases separately of inventory management or integrated into the application history or the total cost considered. For the performance evaluation of the maintenance service, there are models based on Petri nets or using simulation software such as Arena. The criteria, which took into account the performance evaluation, are maintenance quality, maintenance costs, and time control. So, Table 1 presents a view of the parameters' frequency in the literature review.

A spare part stock is necessary in the performance of maintenance interventions on production facilities. In the literature review of the joint management of spare parts and maintenance, the performance evaluation is rarely addressed. In this context, we have developed a model,

Table 1: The parameters' frequency in the literature review.

References	Demand forecasts	Time of maintenance intervention	Failure number	Maintenance policy	Maintenance frequency	Spare parts' inventory management	Decisions	Repair	Inventory levels	Maintenance agent number	Performance evaluation	Corrective maintenance	Preventive maintenance	Order quantity	Order interval	Production	Reliability
[4]											x	x	x				
[5]									x		x						
[6]	x	x															
[7]					x	x		x									
[8]				x													
[9]											x	x					
[10]							x										
[11]	x	x															
[12]				x													
[13]						x		x									
[14]	x					x							x				
[15]				x													
[16]									x		x					x	
[17]								x		x							x
[18]			x														
[2]		x												x	x		
[19]									x	x							
[20]								x		x							x
[21]						x			x		x						
[22]						x			x		x	x	x				

proposed in [22], which allows us to evaluate the performance of the interventions of the maintenance and the supply of the spare parts.

In this paper, we first present the model in Section 2, and then in Section 3, the analytical study of the model is presented by defining the performance indicators and viewing the influence of system parameters on these indicators. We deal with an application of the analytical evaluation of the proposed model in Section 4. We end this article with an analysis and synthesis presented in Section 5.

2. Performance Evaluation Model for the Joint Management of Spare Parts and Maintenance

The maintenance and spare parts' management are always linked because we cannot do maintenance interventions on production facilities without a necessary stock of spare parts. With regard to this joint management, most of the work is directed towards the selection of intervention policies and the determination of the number of parts required. On the contrary, joint management performance evaluation is rarely addressed. In this context, we present a model, proposed in [22], which allows us to evaluate the performance of the interventions of the maintenance and the supply of the spare parts. This model is based on the model proposed in [21] for the performance evaluation of the management of spare parts, which is inspired from the models presented in [5, 16] and the models presented in [4, 9] that deal with the performance evaluation of the maintenance. The model is presented in Figure 1, and its parameters are presented in Table 2. Thus, we add additional indicators to the indicators already presented in [21] for the section of the analytical study of the management of spare parts.

According to Bounou et al. [21], the characteristics of the spare parts' stock supply system are recalled: the stock management policy considered is (T, s, S), the demand is stochastic, and following the fish process, the lead time is stochastic and follows the exponential law. Thus, the maintenance service request is lost or postponed when there is an out of stock due to a dead stock or supply delay too long and exceeds what is expected. This reported request will influence the maintenance action and later on the production system.

(1) MC stands for corrective maintenance

(2) MP means preventive maintenance

The model's operation is summarized from [21, 22] by the following:

(1) The stock level is modeled by M-marking M (P1).

(2) The stock level and the current supply orders are photographed using its M-marking M (P2).

(3) The inhibitory arc connecting transition t3 and place P2 monitored the level of the stock.

(4) The policy we considered in our system is a policy with periodic review, and at each period, we have crossing of transition t5, and two tokens are placed in places P5 and P6.

(5) During the stock status inspection, there are two cases either to cross transition t3 or transition t4. In both cases of inspections, transition t3 has priority over transition t4. After the crossing in all cases, a token is deposited in place P4 to generate a new inventory revision period.

(6) When t6 is crossed (an unexpected failure), the machine is put on hold for corrective maintenance (P8).

(7) When the technician is available, transition t8 is crossed to begin the repair of the machine (P9). The completed repair task gives place crossing transition t9 in order to test the operation of the machine before restarting it.

(8) In the case of preventive maintenance, the fixed revision period gives place the crossing of transition t12. When the machine is operational, the token is in one of the places P11 and P12 which crosses one of the two transitions t7_1 and t7_2 and puts the machine in the waiting state of a corrective maintenance.

According to the literature review, it is necessary to master the spare parts' management and the maintenance management at the same time since these two elements are interrelated and essential for the industry in order to ensure continuity of service. Thus, we noticed that the probabilistic graphical methods are the most efficient techniques for the joint management for these two elements. As it is defined in Petri nets, the techniques of performance evaluation are divided into two main approaches: analytical and simulation. The proposed model is developed from the models proposed in the literature. We will apply the analytic approach for joint management performance evaluation with performance indicators presented in the next section. The new integrated indicators, in relation to our work, are linked to the management of maintenance in order to control it in parallel with the management of spare parts according to the parameters of supply and repair (maintenance).

3. Analytical Study of Performance Evaluation

Regarding the indicators that we can consider in the performance evaluation in the joint management of spare parts' management and maintenance in addition to the criteria already used in [21], we will add the following indicators related to the maintenance: the frequency of unforeseen breakdowns, the frequency of planned interventions, and the duration, quality, and costs of interventions. We start the stages of the analytical study of our model proposed by developing the μ-marking graph, the associated Markov process, and the definition of performance indicators. At the end of the analytical study, we move on to graphically visualize the influence of the system rates on the performance indicators.

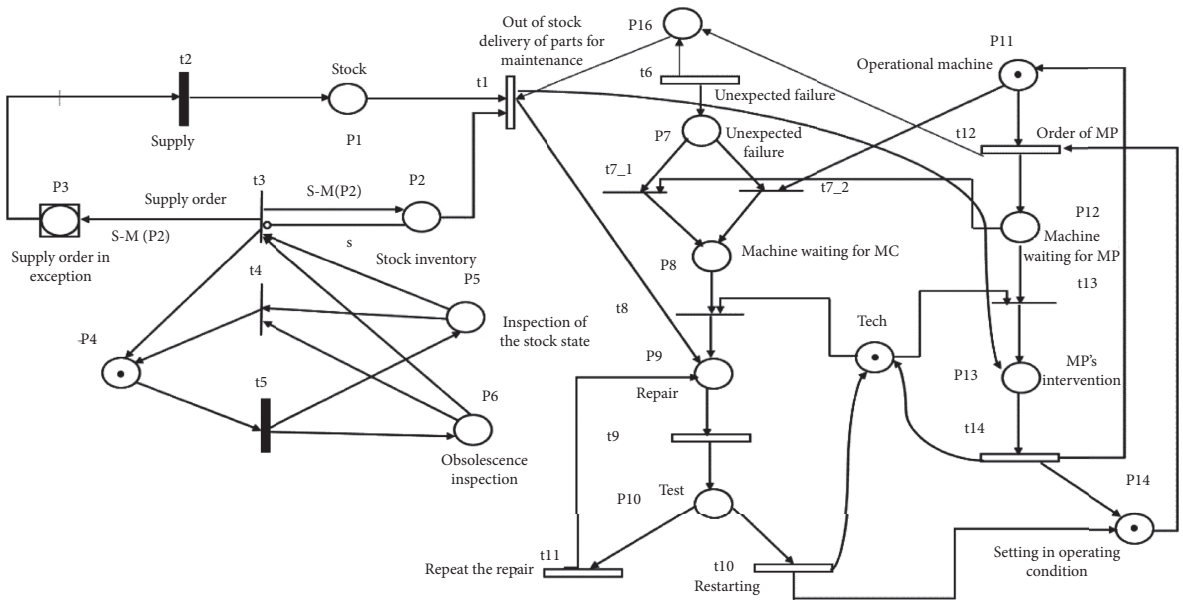

Figure 1: Spare parts and maintenance management model.

Table 2: Designation of model parameters.

	Designation	Significance
Places		
Spare parts' supply	P1	Stock
	P2	Stock level and orders in progress
	P3	Supply orders in progress
	P4	Generation of a new review and inspection period
	P5	Inspection of the state of the stock level of spare parts
	P6	The obsolescence inspection of the stock
Maintenance management	P7	Broken machine
	P8	Machine waiting for corrective intervention
	P9	Machine repair
	P10	Test the machine operation after repair
	P11	Operational machine before preventive intervention
	P12	Machine waiting for preventive intervention
	P13	Transfer to preventive intervention
	P14	Put the machine back into working order
	Tech	Technicians' availability
Transitions		
Spare parts' supply	t1	Output of stock and delivery of maintenance service request
	t2	The order procurement operation
	t3	The ordering process
	t4	The state of the stock level sufficient
	t5	Deterministic timing for inspection
Maintenance management	t6	Failure or unexpected breakdown
	t7_1 and t7_2	Deterministic transitions allow to go to the waiting state
	t8	Initiate the repair phase
	t9	The end of repair and trigger the test phase
	t10	Restarting in the case of good operation
	t11	Repeat the repair
	t12	Preventive maintenance order
	t13	Order of the intervention commencement
	t14	The intervention end and start-up

3.1. Evolution of the System and Resolution of the Associated Stochastic Process. The μ-marking graph represents the evolution of the system modeled by the batch deterministic and stochastic Petri nets. It describes each state of the system, and each crossing represents the execution of an operation. It is constructed from the initial μ-marking and

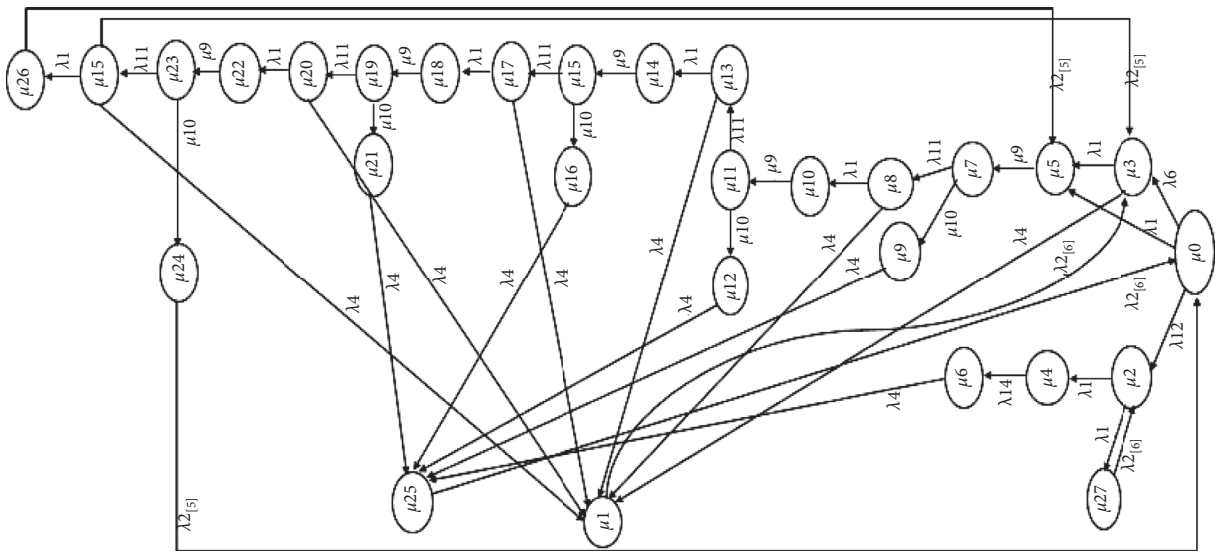

Figure 2: The graph of the associated Markov chain.

by considering all the possible crossings, by the repetition of its principle. Unstable states are eliminated by merging the tangible states in order to lighten the graph and the resolution method. So, this graph is isomorphic to a continuous-time Markov chain which will make it possible to determine the associated stochastic process and its characterization.

After the precision of the Markovian stochastic process related to the studied system, we pass to the precision of the characteristics of the process: the probability distribution of the network's states and the transition matrix constructed from the associated Markov chain graph, presented in Figure 2. The parameters of the stock management policy considered (T, s, S), in the model presented in Figure 1, are (5, 2, 6). The initial μ-marking is $\mu_0 = (6, 6, \emptyset, 0, 0, 0, 0, 0, 0, 1, 0, 0, 1, 1, \{1, 2\})$. To simplify the complexity of the study of this system and the resolution of the associated system, we consider that the lot size does not influence the demand and the time of supply. In this case, the associated transition matrix is simplified. The probability distribution of the states is a function of several parameters presented in Table 3. It is represented by a line vector $\prod_1$ and obtained by solving the following system:

$$\begin{cases} \Pi_1 . Q = 0, \\ \sum_i \pi_i = 1, \end{cases} \tag{1}$$

with Q being a simplified transition matrix, Π_1 being the probability distribution of the states, and π_i representing the element of Π_1.

3.2. Evaluation of the System Performance by Indicators. Using the performance indicators formalized by [5, 9, 16, 21] and the state distribution, the performance evaluation of the modeled system is done by the analysis of the parameters' effect on the variation of the performance which depends on the parameters cited in Table 2.

Table 3: The parameters of the graph of the associated Markov chain.

Parameters	Designation
λ_1	Demand rate
λ_2	Delay rate
λ_6	Unexpected failure rate
λ_{11}	Rate to repair again
λ_{12}	Rate of preventive maintenance interventions
μ_9	Repair rate for corrective maintenance
μ_{10}	Test success rate
μ_{14}	Repair rate for preventive maintenance

(1) Average stock S_{moy}: the average stock function is given by the average M-marking of place P1:

$$S_{\text{moy}} = M(p1)_{\text{moy}} = \sum_{i=0}^{28} \pi_i * \mu(p1). \tag{2}$$

(2) Average storage cost: the average storage cost function is given by multiplying the average stock function by the storage cost per unit CS:

$$\begin{aligned} \text{CS}_{\text{moy}} &= C_s * S_{\text{moy}} = C_s * M(p1)_{\text{moy}}, \\ \text{CS}_{\text{moy}} &= C_s * \sum_{i=0}^{28} \pi_i * \mu(p1). \end{aligned} \tag{3}$$

(3) Probability of the empty stock: the probability of the stock break is based on the μ-marking of place p1 when it is equal to zero:

$$\begin{aligned} \text{Prob}_{S=0} &= \text{Prob}(\mu(p1) = 0), \\ \text{Prob}_{S=0} &= \pi_1 + \pi_{26} + \pi_{27} + \pi_{28}. \end{aligned} \tag{4}$$

(4) Frequency of supply: based on the μ-marking graph, the average supply frequency corresponds to the average crossing frequency of transition t2:

$$S\left(t2_{[5]}\right) = \{\mu_{24}, \mu_{25}, \mu_{26}\},$$
$$S\left(t2_{[6]}\right) = \{\mu_1, \mu_{27}, \mu_{28}\},$$
$$\mathrm{FA}_{\mathrm{moy}} = \sum_i F(t2[i]) = \sum_x \sum_{i|\mu_i \varepsilon S\left(t2_{[x]}\right)} \lambda 2_{[x]} * \pi_i,$$
$$\mathrm{FA}_{\mathrm{moy}} = \lambda 2 * \left(\pi_1 + \pi_{24} + \pi_{25} + \pi_{26} + \pi_{27} + \pi_{28}\right). \tag{5}$$

(5) Average ordering cost: the ordering cost is in the form of a product of the average supply order frequency and the unit price of placing an order C_c:

$$\mathrm{CC}_{\mathrm{moy}} = \mathrm{C}_c * F(t3) = \mathrm{C}_c * \mathrm{FA}_{\mathrm{moy}},$$
$$\mathrm{CC}_{\mathrm{moy}} = \mathrm{C}_c * \lambda 2 * \left(\pi_1 + \pi_{24} + \pi_{25} + \pi_{26} + \pi_{27} + \pi_{28}\right). \tag{6}$$

(6) Average purchase cost: the average purchase frequency is the average supply frequency (C_a: unit purchase cost of a product unit):

$$\mathrm{CA}_{\mathrm{moy}} = C_a * \mathrm{FA}_{\mathrm{moy}},$$
$$\mathrm{CA}_{\mathrm{moy}} = C_a * \lambda 2 * \left(\pi_1 + \pi_{24} + \pi_{25} + \pi_{26} + \pi_{27} + \pi_{28}\right). \tag{7}$$

(7) Coverage rate: so, the average demand is equal to $(1/\lambda 1)$. Regarding the average stock, it is already calculated based on the marking of place p1:

$$\mathrm{TC} = \frac{S_{\mathrm{moy}}}{D_{\mathrm{moy}}} = \lambda 1 * S_{\mathrm{moy}}. \tag{8}$$

(8) Average cost of inventory outage: out of stock is a nil stock and can be caused by a delay in the supply of orders (with C_{ru}: cost of breaking the unit stock):

$$\begin{aligned} \mathrm{CR}_{\mathrm{moy}} &= C_{ru} * \lambda_2 * \mathrm{Prob}_{S=0}, \\ \mathrm{CR}_{\mathrm{moy}} &= C_{ru} * \lambda_2 * \left(\pi_1 + \pi_{26} + \pi_{27} + \pi_{28}\right). \end{aligned} \tag{9}$$

(9) Probability of having a dead stock: in our system, there is an inspection over the life of the stored spare parts. Based on the μ-marking of place p6, the dead stock is represented by μ-marking equal to 1:

$$\mathrm{Prob}_{\mathrm{DV}=0} = \mathrm{Prob}\left(\mu(p6) = 1\right) = \pi_1 + \pi_{28}. \tag{10}$$

(10) Cost of obsolescence: the dead stock generates an additional cost to the costs already considered. In the case of obsolescence, an order is passed (with C_{ob}: obsolescence cost per unit):

$$\begin{aligned} \mathrm{CO}_{\mathrm{moy}} &= C_{\mathrm{ob}} * \lambda_2 * \mathrm{Prob}_{\mathrm{DV}=0}, \\ \mathrm{CO}_{\mathrm{moy}} &= C_{\mathrm{ob}} * \lambda_2 * \left(\pi_1 + \pi_{28}\right). \end{aligned} \tag{11}$$

(11) The frequency of unplanned failure is calculated based on the crossing of transition t6 which is related to the failure rate:

$$\mathrm{FPI}_{\mathrm{moy}} = \lambda_6 * \pi_0. \tag{12}$$

(12) The frequency of planned interventions consists of calculating the frequency of crossing transition t12 and transitions t7_1 and t7_2 through preventive maintenance:

$$\mathrm{FIP}_{\mathrm{moy}} = \lambda_{12} * \pi_0. \tag{13}$$

(13) The repair frequency consists of calculating the repair frequency given by the average M-marking of place P9 in the case of corrective intervention or place P13 in the case of preventive intervention P13.

Corrective intervention:

$$\mathrm{FRc}_{\mathrm{moy}} = \lambda_6 * \pi_3 + \lambda_{11} * \left(\pi_8 + \pi_{17} + \pi_{20} + \pi_{25}\right). \tag{14}$$

Preventive intervention:

$$\mathrm{FRp}_{\mathrm{moy}} = \lambda_{12} * \pi_2. \tag{15}$$

(14) The intervention duration is measured by the token residence time either in place P9 for the corrective maintenance or place P13 for the preventive maintenance:

$$Di_{\mathrm{moy}} = Di_u * \left(\mathrm{FRc}_{\mathrm{moy}} + \mathrm{FRp}_{\mathrm{moy}}\right). \tag{16}$$

(15) The intervention quality is measured by the frequencies of crossing transitions t11 (bad repair) and t10 (good repair).

Good repair:

$$Q_{\mathrm{BRmoy}} = \mu_{10} * \left(\pi_7 + \pi_{11} + \pi_{15} + \pi_{19} + \pi_{23}\right). \tag{17}$$

Bad repair:

$$Q_{\mathrm{MRmoy}} = \lambda_{11} * \left(\pi_7 + \pi_{11} + \pi_{15} + \pi_{19} + \pi_{23}\right). \tag{18}$$

(16) The costs of the interventions contain the costs of repair (C_r), technician work (Cth labor cost per hour), and parts (C_p unit cost), as well as production downtime presented by a shortfall (C_{vpu} unit cost of product sales and Q_{h} quantity produced per hour). They are mainly based on the intervention duration:

Table 4: The parameters considered in the analytical evaluation.

Cases	Parameters	
Case 1: variation of demand and delay rates	λ_1	Variable
	λ_2	Variable
	λ_6	0.075
	λ_{11}	0.01
	λ_{12}	2
	μ_9	0.34
	μ_{10}	0.9
	μ_{14}	0.13
Case 2: rate variation of unexpected failure and maintenance interventions	λ_1	4
	λ_2	2
	λ_6	Variable
	λ_{11}	0.01
	λ_{12}	Variable
	μ_9	0.34
	μ_{10}	0.9
	μ_{14}	0.13
Case 3: repair rate variation for corrective and preventive maintenance	λ_1	4
	λ_2	2
	λ_6	0.075
	λ_{11}	0.01
	λ_{12}	2
	μ_9	Variable
	μ_{10}	0.9
	μ_{14}	Variable
Case 4: test rate variation (repair again or not)	λ_1	4
	λ_2	2
	λ_6	0.075
	λ_{11}	Variable
	λ_{12}	2
	μ_9	0.34
	μ_{10}	Variable
	μ_{14}	0.13

$$\mathrm{CI}_{\mathrm{moy}} = C_r + C_{\mathrm{th}} * Di_{\mathrm{moy}} + C_p * \left(\mathrm{FPI}_{\mathrm{moy}} + \mathrm{FIP}_{\mathrm{moy}}\right) + C_{\mathrm{vpu}} * Q_{\mathrm{h}} * Di_{\mathrm{moy}}. \tag{19}$$

3.3. The Indicators Graphic Visualization. We now move on to graphically visualize the influence of the system rates on the performance indicators. The indicators are based on 8 parameters, which lead us to discretize the evaluation of the indicators in the form of cases by varying just two parameters, and the others are fixed. The parameters considered, in different cases of the analytical study, are presented in Table 4.

3.3.1. Average Stock. The different curves in Figure 3 show the effects of the model rates on the average stock. Curve (1) in Figure 3 shows the effects of delay and demand rates on average inventory. This indictor has known large values when the demand rate is small. On the contrary, the average stock decreases with the increase in the demand rate. Regarding the delay rate, it does not have a big influence on the average stock like the demand rate.

Then, curve (2) represents the effects of the rate variation of the unexpected failures and planned interventions. When these rates have small values, the average stock has peak values. For the large values of the preventive intervention rate and the small values of the failure rate, it is noted in this case that the average stock has larger values than in the case of the large values of the two rates. Thus, the average stock, in the latter case, is greater compared to the average stock, the large values of failure rate, and the small values of preventive intervention rate.

On the contrary, curve (3) represents the effects of the variation of repair rates for corrective and preventive maintenance. If one of the repair rates (corrective or preventive) has small values, the average stock has experienced large values. On the contrary, the average stock becomes stable when the two rates increase. Finally, from curve (4), we observe the effects of the variation in repair test rates. We note that the average stock increases when the repair again rate increases. The increase in the test success rate (i.e., the test success is poor) causes the average stock level to decrease. The stock has maximum values at the zero value of the test success rate regardless of the repair again rate.

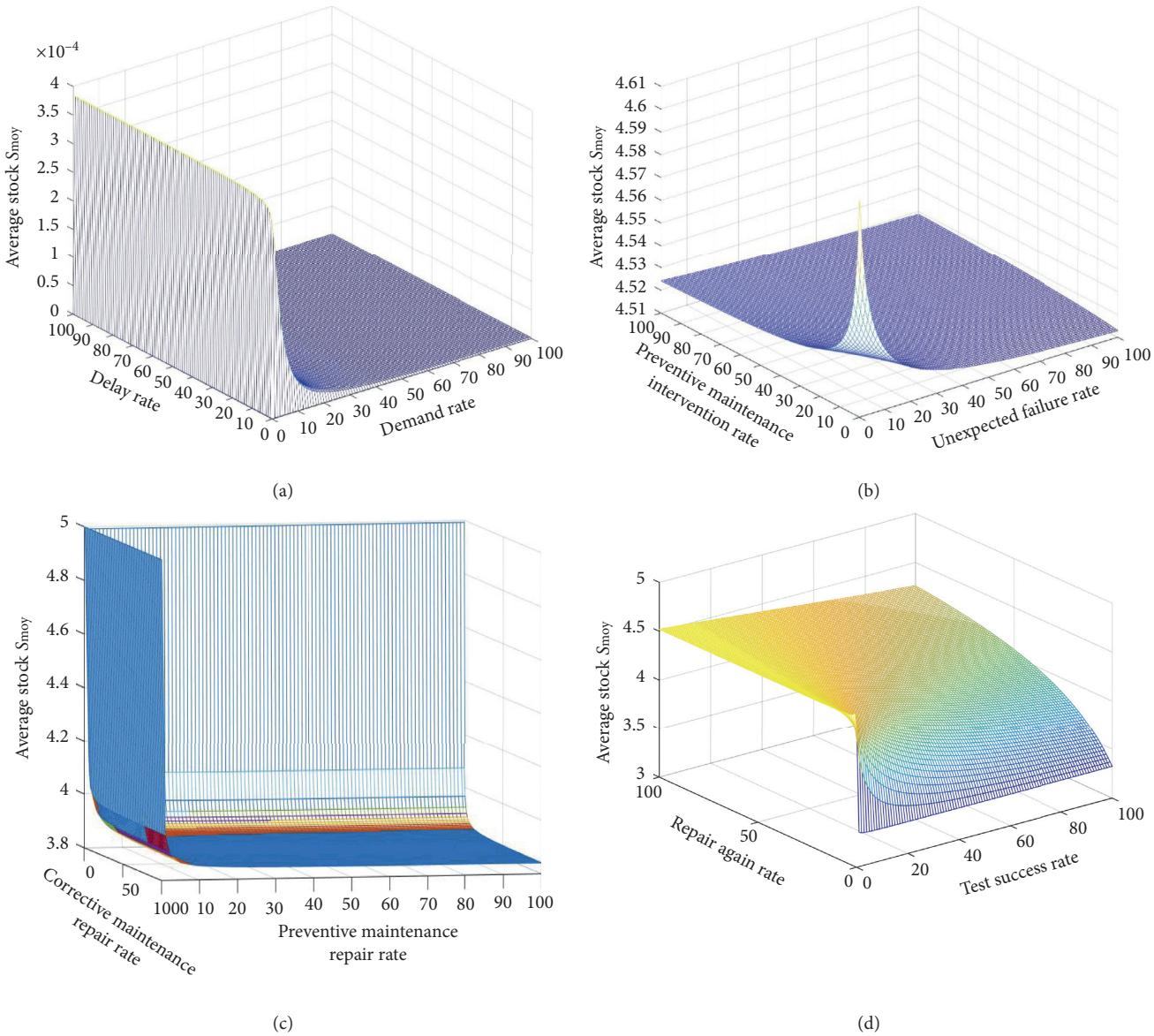

Figure 3: Average stock. (a) Variation of demand and delay rates. (b) Rate variation of unexpected failure and maintenance interventions. (c) Repair rate variation for corrective and preventive maintenance. (d) Test rate variation (repair again or not).

3.3.2. Probability of Empty Stock. The different curves in Figure 4 show the effects of the model rates on the probability of the empty stock. Curve (1) in Figure 4 shows the effects of delay and demand rates on the probability of empty inventory. We note that the stock shortage probability is high when the delay rate is small (i.e., the delay is long) which is logical since the risk of stock shortage is linked to the deadline. When the latter is long or exceeds what is expected, the risk of rupture becomes very likely.

Then, curve (2) represents the effects of the variation of the unexpected failure and planned intervention rates on the probability. We notice that the probability has known a minimum value just at the level of the small values of the rates. So, the two rates influence in the same way; recently, when one of the rates increases, the probability increases. We note that the unexpected failure rate has a significant influence on the probability of stock shortage (empty stock).

On the contrary, curve (3) represents the effects of the variation in repair rates for corrective and preventive maintenance. The remark retained is the probability of empty stock is small when one of the rates has small values. Finally, from curve (4), we observe the effects of the variation in repair test rates. In this case, we see that the repair again rate has a great influence on the probability of empty stock; on the contrary, the test success rate is logical. The probability increases if the repair again rate increases.

3.3.3. Supply Frequency. The different curves in Figure 5 show the effects of the model rates on the supply frequency. Curve (1) in Figure 5 shows the effects of delay and demand

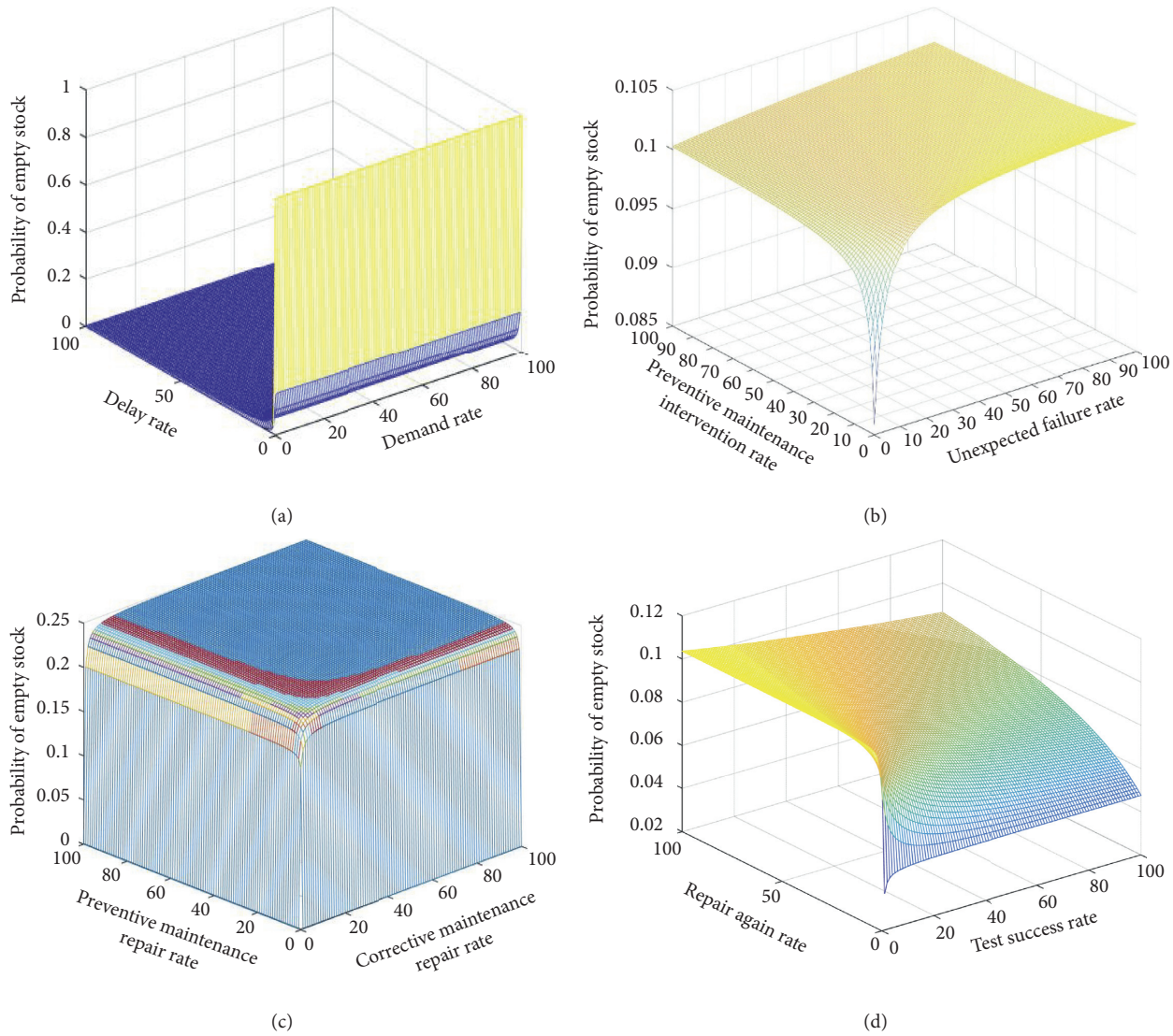

Figure 4: Probability of empty stock. (a) Variation of demand and delay rates. (b) Rate variation of unexpected failure and maintenance interventions. (c) Repair rate variation for corrective and preventive maintenance. (d) Test rate variation (repair again or not).

rates on this frequency. The conclusion adopted is that the demand rate does not have a significant influence on the frequency, in contrast to the delay rate, which influences randomness. These variations have large values during large delay rate values and small demand rate values (i.e., increases in demand).

Then, curve (2) represents the effects of the variation in the unexpected failure and planned intervention rates. The minimum of frequency is at values close to zero for the two rates. The frequency increases suddenly to have a slow variation. A large frequency occurs at large values of the unexpected failure rate and small values of the preventive intervention rate. The second point is at an average value of the supply frequency when the two rates are large.

On the contrary, curve (3) represents the effects of the variation in repair rates for corrective and preventive maintenance. The supply frequency is small when one of the rates is small, and the maximum value takes place when the two rates have large values. Note that the two rates influence the frequency in the same way.

Finally, from curve (4), we observe the effects of the variation in repair test rates. Test rates have a major influence on the frequency of supply. The large values of this indicator are at the levels of small values of the test success rate (good repair) and large values of the repair again rate. So, the repair again rate has a big influence on the frequency so that the latter increases when the rate increases. On the contrary, the test success rate influences the frequency inversely compared to the repair again rate, i.e., increasing the test success rate decreases the frequency.

3.3.4. Coverage Rate. The different curves in Figure 6 show the effects of the model rates on the coverage rate. Curve (1) in Figure 6 shows the effects of delay and demand rates on the coverage rate. It has increased at the small values of the demand rate and then decreased with the increase in the

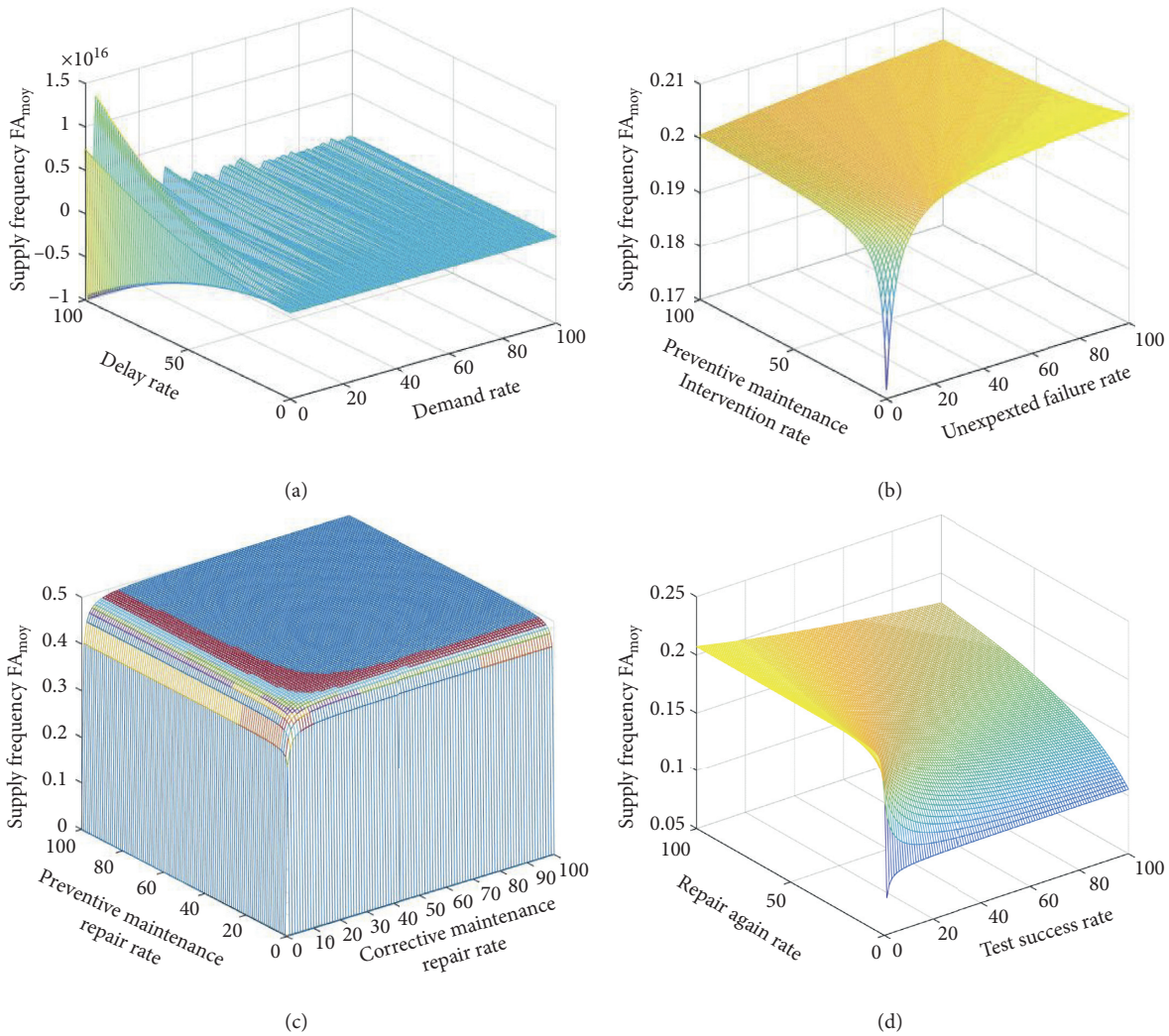

Figure 5: Supply frequency. (a) Variation of demand and delay rates. (b) Rate variation of unexpected failure and maintenance interventions. (c) Repair rate variation for corrective and preventive maintenance. (d) Test rate variation (repair again or not).

demand rate. Thus, we note that the delay rate does not have a great influence on the coverage rate.

Then, curve (2) represents the effects of the variation in the unexpected failure and planned intervention rates. The coverage rate peaked at the small values for both rates. Thus, the small values of the unexpected failure rate give large values of the coverage rate, i.e., this later decreases with the increase in the unexpected failure rate. Regarding the preventive intervention rate, it does not influence in a remarkable way and slightly increases the coverage rate.

On the contrary, curve (3) represents the effects of the variation in repair rates for corrective and preventive maintenance. The coverage rate has large values when one of the preventive and corrective repair rates has small values. For the rest of the rate values, the coverage rate remains stable after the decrease.

Finally, from curve (4), we observe the effects of the variation in repair test rates. The repair again rate has a big influence on the coverage rate. At small values of the repair again rate, the test success rate does not have a large influence on the coverage rate. The increase in the two repair test rates influences having a high coverage rate, but the latter is lower than the value in the case of the test success rate is very small. Finally, we conclude that increasing the repair again rate increases the coverage rate; on the contrary, the increase in test success decreases it, which is logical.

3.3.5. Obsolescence Probability. The different curves in Figure 7 show the effects of the model rates on the probability of obsolescence. Curve (1) in Figure 7 shows the effects of delay rates and maintenance service demand on the obsolescence probability. This probability decreases with a large delay rate (i.e., the delay is small); however, small delay rate values give large probability values. The demand rate has a slight influence on the probability, and this influence is noticed with the small values of the delay rate (large delay). With large demand rate values (low demand) and small delay rate values (large delay), the obsolescence probability is equal to 1.

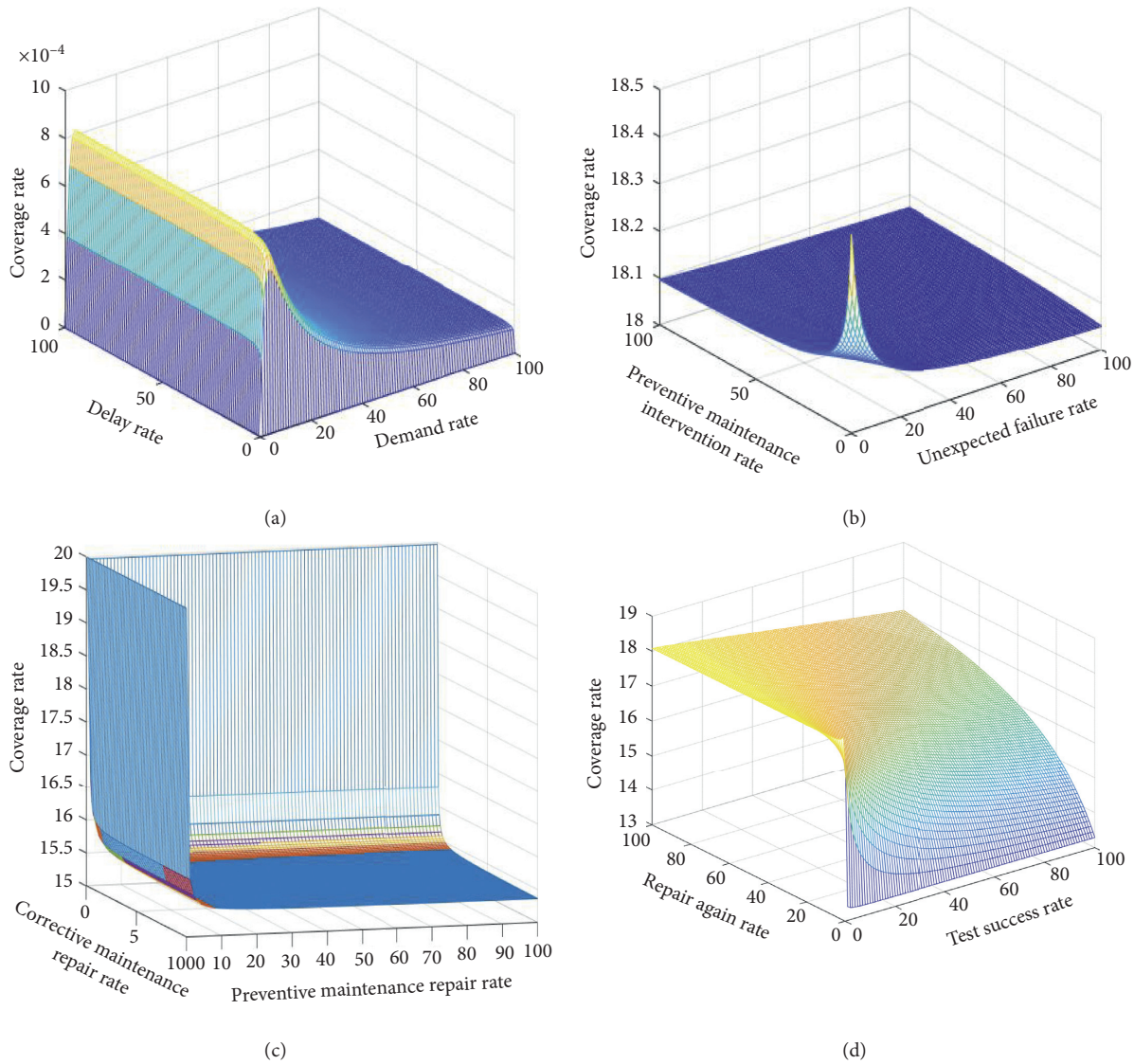

Figure 6: Coverage rate. (a) Variation of demand and delay rates. (b) Rate variation of unexpected failure and maintenance interventions. (c) Repair rate variation for corrective and preventive maintenance. (d) Test rate variation (repair again or not).

Then, curve (2) represents the effects of the variation in the unexpected failure and planned intervention rates. We note, on the one hand, that the minimum probability of obsolescence is obtained in the area of the large preventive intervention rate and the low rate of unexpected failure, although the maximum value is obtained in the area of the low preventive intervention rate and high unexpected failure rate (i.e., low failures). On the other hand, the remark retained is that the unexpected failure rate influences more than the preventive intervention rate on the obsolescence probability.

On the contrary, curve (3) represents the effects of the variation in repair rates for corrective and preventive maintenance. In this case, we note that the corrective and preventive repair rates influence in the same way on the probability. The maximum value of the probability is when both rates have large values. Finally, from curve (4), we observe the effects of the variation in repair test rates. We notice that

(1) Increasing the test success rate helps to decrease the probability, against increasing the repair again rate

(2) The maximum value takes place with large values of the repair again rate and small values of the test success rate (i.e., the success of the test is great, and repeating the test is very low), which is logical

3.3.6. Interventions' Frequency

Interventions for Unexpected Failures. The different curves in Figure 8 show the effects of model rates on the frequency of inventions due to unexpected failures. Curve (1) in Figure 8 shows the effects of delay and demand rates on the unexpected failure frequency. Firstly, we note that the delay rate does not influence the unexpected failure frequency. This frequency has a maximum value when the demand rate is low (i.e., the demand is high) which makes sense. Thus, it

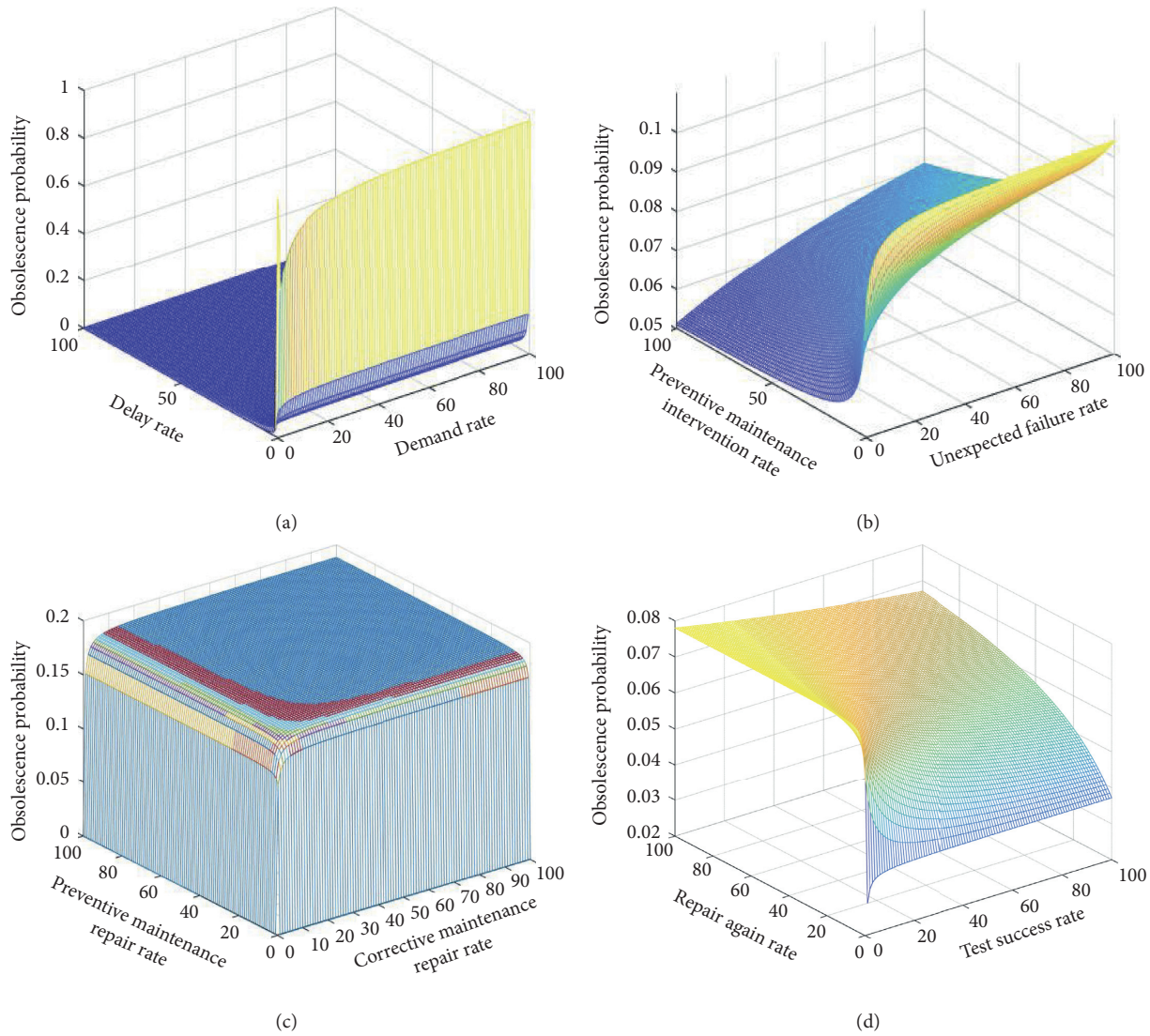

Figure 7: Obsolescence probability. (a) Variation of demand and delay rates. (b) Rate variation of unexpected failure and maintenance interventions. (c) Repair rate variation for corrective and preventive maintenance. (d) Test rate variation (repair again or not).

decreases with an increase in the demand rate (i.e., a decrease in the service demand).

Then, curve (2) represents the effects of the variation in the unexpected failure and planned intervention rates. The unexpected failure frequency is random according to the unexpected failure and preventive maintenance rates. It is similar to the sinusoidal shape with variable amplitude. The unexpected failure rate has a remarkable influence on the frequency.

On the contrary, curve (3) represents the effects of the variation in repair rates for corrective and preventive maintenance. The conclusion reached is that repair rates influence the frequency in the same way. Finally, from curve (4), we observe the effects of the variation in repair test rates. We notice that

(1) The increase in the test success rate helps to decrease the unexpected failure frequency; on the contrary, the increase in the repair again rate increases the probability

(2) The maximum value takes place with large values of the repair again rate and small values of the test success rate (i.e., the test success is great, and repair again is very low), which is logical

Preventive Interventions. The different curves in Figure 9 show the effects of the model rates on the preventive intervention frequency. Curve (1) in Figure 9 shows the effects of delay and demand rates on this frequency. We note the same remark of the unexpected failure frequency: the demand rate also influences the preventive intervention frequency against the delay. This influence is focused on the area of small values of the demand rate.

Then, curve (2) represents the effects of the variation in the unexpected failure and planned intervention rates. The preventive maintenance rate influences in a way that it increases the frequency. However, the unexpected failure rate increases the frequency decreases.

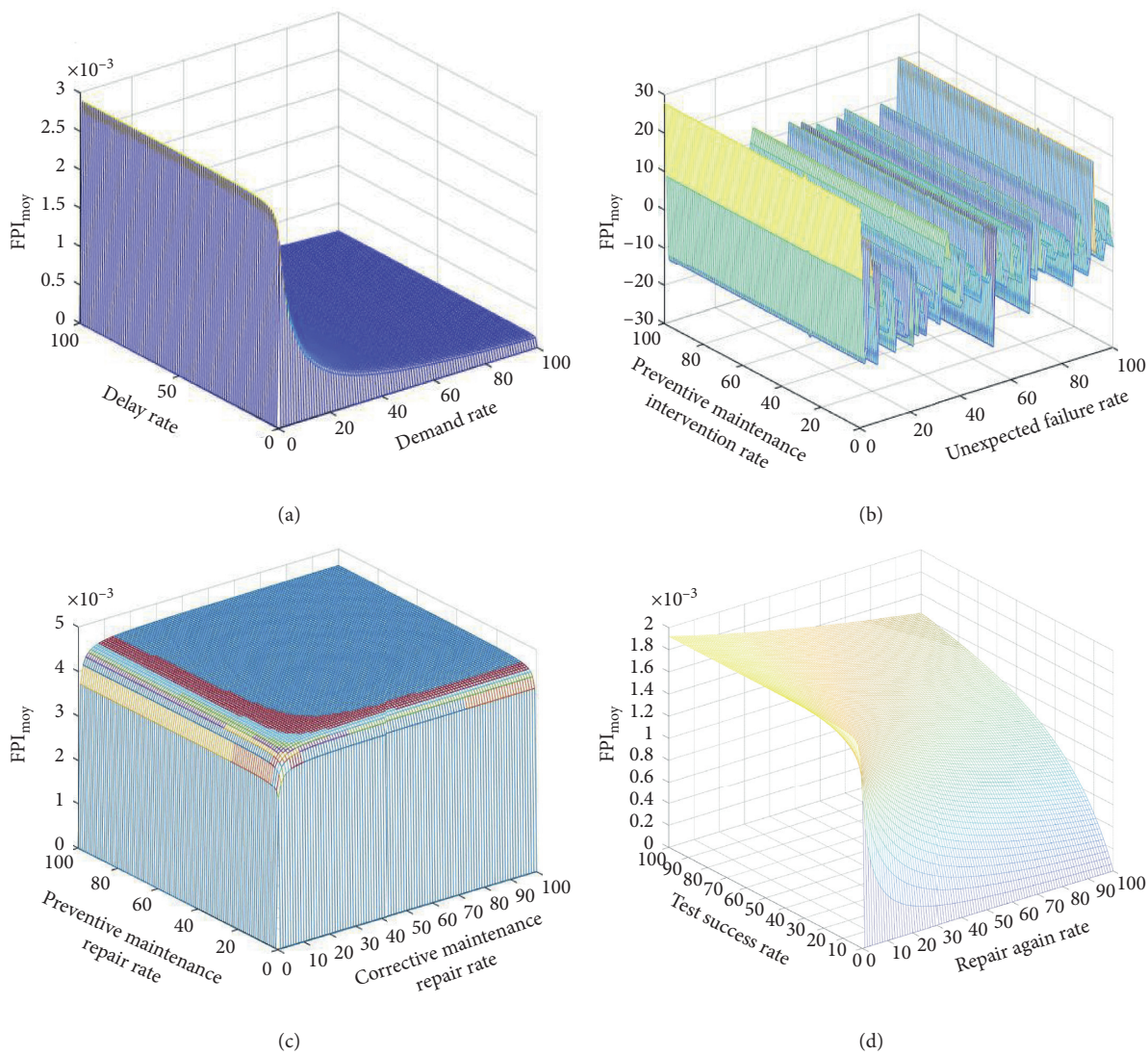

Figure 8: Interventions for unexpected failures. (a) Variation of demand and delay rates. (b) Rate variation of unexpected failure and maintenance interventions. (c) Repair rate variation for corrective and preventive maintenance. (d) Test rate variation (repair again or not).

On the contrary, curve (3) represents the effects of the repair rate variation for corrective and preventive maintenance. Both rates increase the frequency in the small value area. The frequency stabilizes at the levels of the large rate values.

Finally, from curve (4), we observe the effects of the repair test rate variation. The repair again rate increases the preventive intervention frequency. The latter also increases if the test success rate increases (the test success is low) which is logical.

3.3.7. Repair Frequency

Corrective Repair. The different curves in Figure 10 show the effects of model rates on the corrective repair frequency. Curve (1) in Figure 10 shows the effects of delay and demand rates on this frequency. The curve of this frequency is similar to the unexpected failure frequency, which is logical. The difference is in the demand rate interval which is restricted in this case compared to the unexpected failure frequency. At this interval, the frequency values are large and stable.

Then, curve (2) represents the effects of the variation in the unexpected failure and planned intervention rates. The unexpected failure rate has a remarkable influence on the corrective repair frequency. The preventive intervention rate also influences the frequency but in a way less than the unexpected failure rate. On the contrary, curve (3) represents the effects of the repair rate variation for corrective and preventive maintenance. We notice that the rates increase the corrective repair frequency in the small value area of one of the rates. On the contrary, the frequency stabilizes for large values. The conclusion reached is that these rates increase the frequency corrective repair.

Finally, from curve (4), we observe the effects of the repair test rate variation. The first remark retained is that the corrective repair frequency knew significant values in the area of large values of the test success rate (i.e., test success is

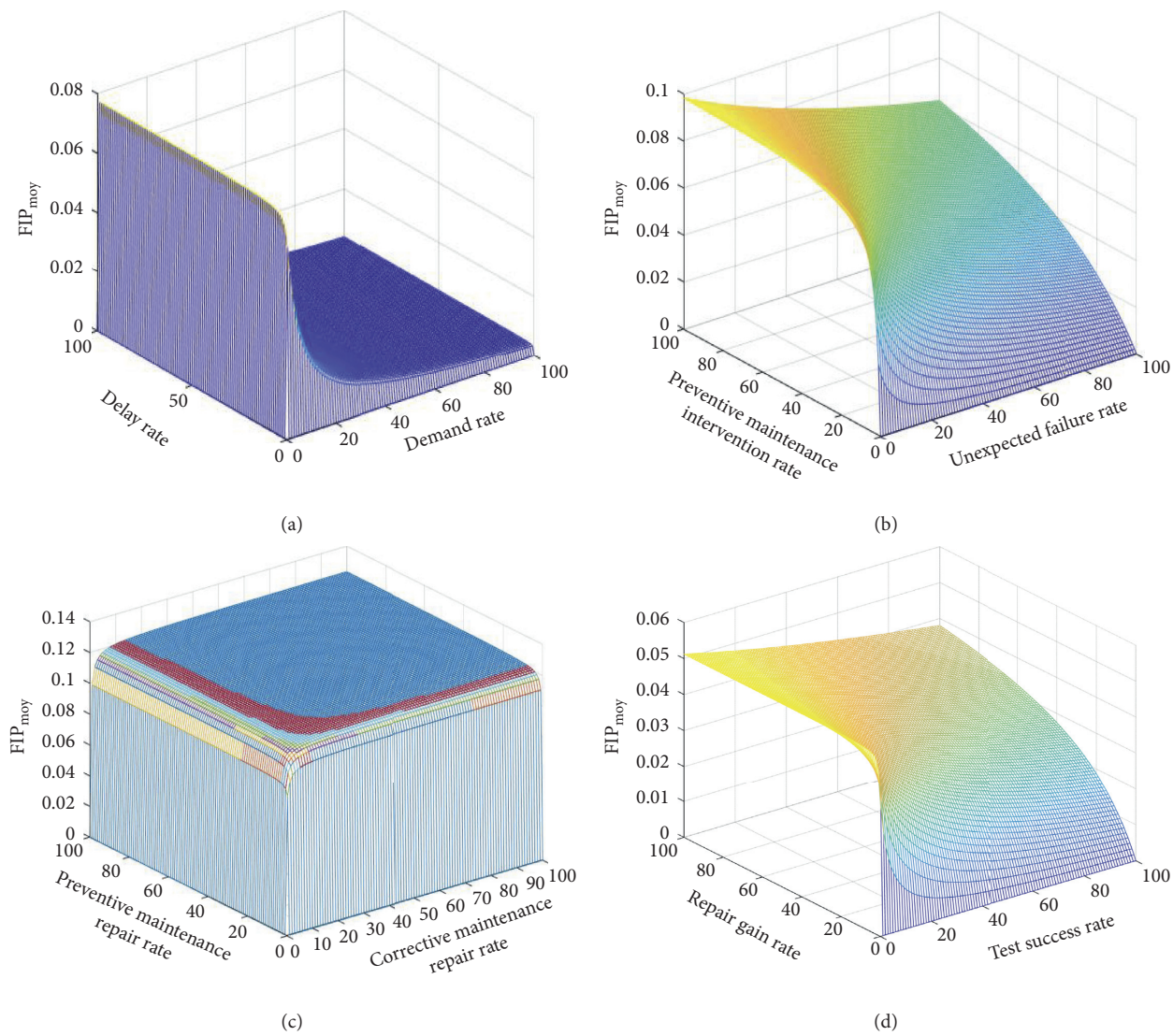

Figure 9: Preventive interventions. (a) Variation of demand and delay rates. (b) Rate variation of unexpected failure and maintenance interventions. (c) Repair rate variation for corrective and preventive maintenance. (d) Test rate variation (repair again or not).

low) and small values of the repair again rate (i.e., the possibility of redoing the repair is important) which is logical. The frequency decreases with increasing the repair again rate (i.e., decreasing the possibility of redoing the repair). In the area of small values of the test success rate (i.e., the test success is high), we notice that the frequency has small values and is not influenced by the repair again rate.

Preventive Repair. The different curves in Figure 11 show the effects of the model rates on the preventive repair frequency. Curve (1) in Figure 11 shows the effects of delay and demand rates on this frequency. We note that the demand rate has a big influence on the frequency. Small demand rate values (i.e., large demand values) give large repair frequencies, which makes sense. Thus, we note that the demand rate interval, which gives these values, is narrower compared to the case of the corrective repair frequency.

Then, curve (2) represents the effects of the unexpected failure and planned intervention rates' variation. The conclusion reached is that the preventive intervention rate has a remarkable influence on the frequency, which is logical.

On the contrary, curve (3) represents the effects of the repair rate variation for corrective and preventive maintenance. The preventive repair frequency has the same curve as the corrective repair frequency. The preventive repair frequency increases at the level of small rate values; on the contrary, it stabilizes at the level of large rate values.

Finally, from curve (4), we observe the effects of the repair test rate variation. We note that the repair again rate influences remarkably the preventive repair frequency. The rates influence this frequency the same way as the corrective repair frequency.

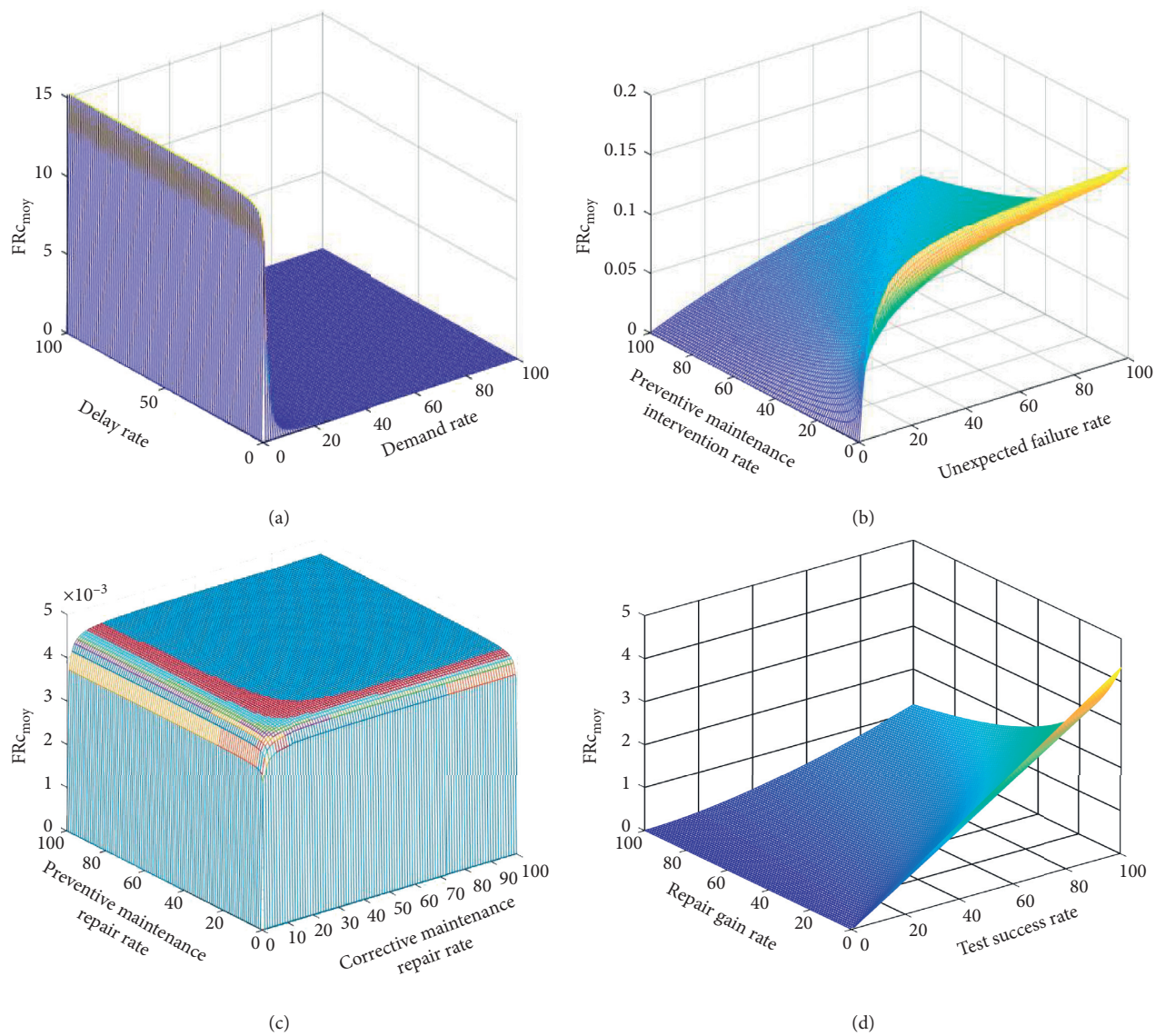

Figure 10: Corrective repair frequency. (a) Variation of demand and delay rates. (b) Rate variation of unexpected failure and maintenance interventions. (c) Repair rate variation for corrective and preventive maintenance. (d) Test rate variation (repair again or not).

3.3.8. Repair Quality

Good Repair. The different curves in Figure 12 show the effects of the model rates on the good quality of repair. Curve (1) in Figure 12 shows the effects of delay and demand rates on this quality. We notice the demand rate influences the good repair; on the contrary, the delay rate has no effect on this quality. Then, curve (2) represents the effects of the unexpected failure and planned intervention rates' variation. The maximum values for good repair are in the area of low preventive intervention rate. The increase in the preventive intervention rate (decrease in preventive interventions) decreases the amount of good repair. On the contrary, the increase in the unexpected failure rate increases the amount of good repair.

On the contrary, curve (3) represents the effects of the repair rate variation for corrective and preventive maintenance. The curve looks like a few indicators based on repair rates. There is an increase in the good repair at the small values of one of the rates, and the stability of the indicator for the rest of the rates changes. Finally, from curve (4), we observe the effects of the repair test rate variation. The small values of the success test rate (success of the test is very low) give a large amount of good repair, which is close to reality. So, increasing the success test rate decreases the amount of good repair; however, when the repair again rate increases (i.e., redoing the repair is low), the good repair increases.

Bad Repair. The different curves in Figure 13 show the effects of model rates on bad repair quality. Curve (1) in Figure 13 shows the effects of delay and demand rates on this quality. This appearance is similar to the case of the good repair amount. So, the demand rate influences the bad repair amount.

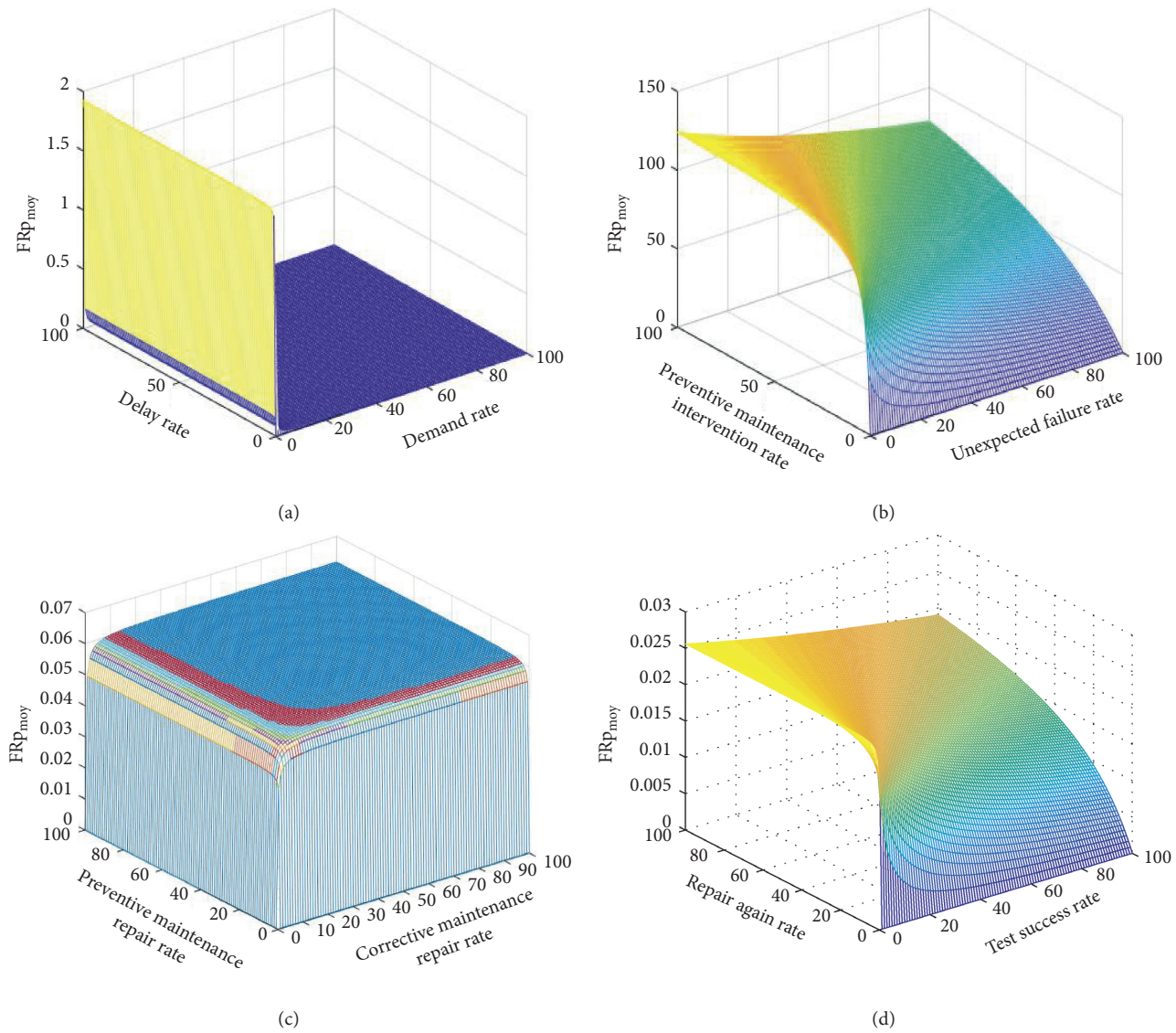

Figure 11: Preventive repair frequency. (a) Variation of demand and delay rates. (b) Rate variation of unexpected failure and maintenance interventions. (c) Repair rate variation for corrective and preventive maintenance. (d) Test rate variation (repair again or not).

Then, curve (2) represents the effects of the unexpected failure and planned intervention rates' variation. Increasing the preventive intervention rate decreases the poor repair amount. However, the increase in the unexpected failure rate increases the quality. Therefore, preventive maintenance improves the quality of repair.

On the contrary, curve (3) represents the effects of the repair rate variation for corrective and preventive maintenance. The curve looks like a few indicators based on repair rates. There is an increase in poor repair at the small values of one of the rates, and the indicator stability for the rest of the rates changes.

Finally, from curve (4), we observe the effects of the repair test rate variation. The first remark is that the appearance of poor repair varies inversely with that of good repair. The small values of the repair again rate make a large amount of poor repair. So, increasing the test success rate increases the bad repair amount, but at the repair again rate, when it increases (i.e., repair again is low), the bad repair decreases.

4. Numerical Case Study

By finalizing this work with a case study in which all the parameters are fixed, we determine the state probability distribution and the indicators. The parameters considered in this study are presented in Table 5, and the results obtained are summarized in Tables 6 (distribution vector) and 7 (indicators).

According to Table 8, some indicators in the form of costs are based on unit costs which can be variable or constant depending on the domains and parameters linked to the system. For the other indicators, we note the average stock indicator, the empty stock, and obsolescence probabilities have the low values. Also, the average coverage rate, the unexpected failures, and corrective repair frequencies

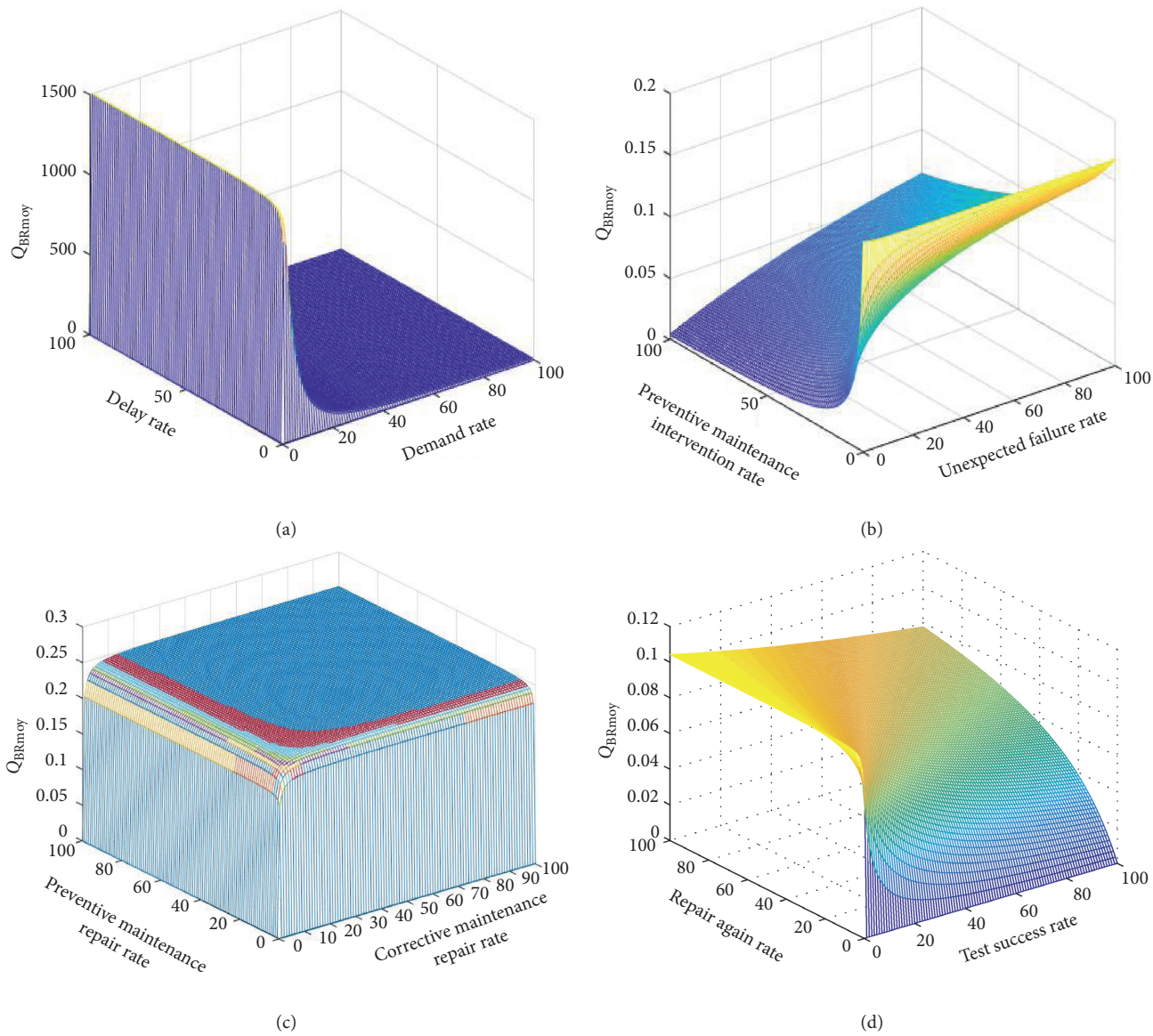

Figure 12: Good repair quality. (a) Variation of demand and delay rates. (b) Rate variation of unexpected failure and maintenance interventions. (c) Repair rate variation for corrective and preventive maintenance. (d) Test rate variation (repair again or not).

have the low values; however, the preventive intervention frequency has high value and finally the repair quality indicators have high medium value.

5. Analysis and Synthesis

We summarize and compare the rates that influence the indicators:

(1) The demand rate influences more the majority of the indicators compared to the delay rate which influences the probabilities. The difference between the majority of indicators in this case is in the demand rate interval in which the indicators have large values.

(2) The two repair rates influence all the indicators in the same way.

(3) The preventive intervention rate influences the average stock, the coverage rate, and the preventive intervention and repair frequencies. The large values of this rate increase these indicators. For the other indicators, they are influenced more by the unexpected failure rate which increases the values of the indicators.

(4) The test success rate influences, in order to increase the values of the indicators, on the corrective intervention and repair frequencies and the indicator of bad repair. For the others, they are influenced by the repair again rate.

Table 8 provides a summary of the rates that increase the indicator values. Of course, the rates, which decrease the indicators, are not mentioned by (∗) in the table. This

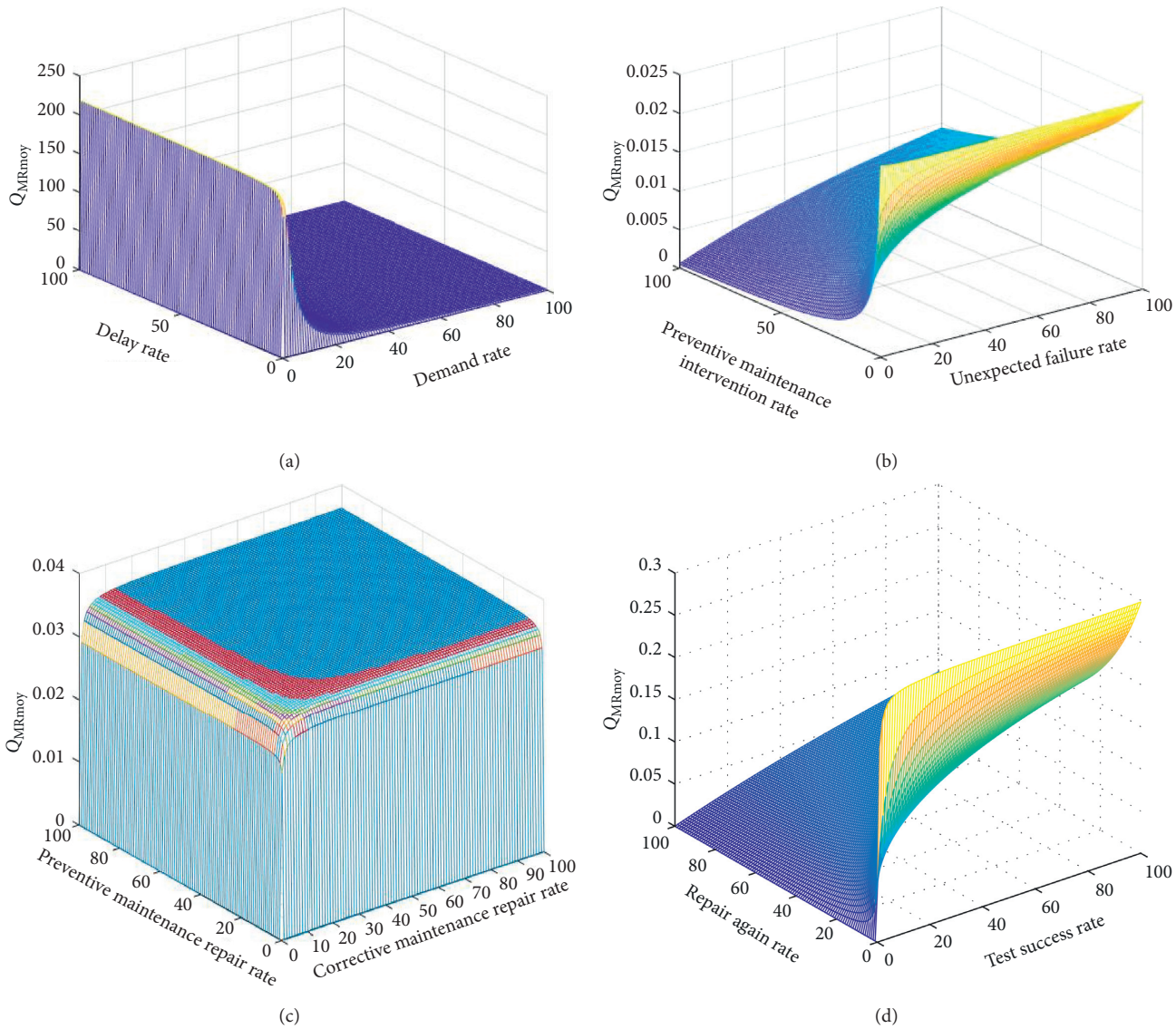

Figure 13: Bad repair quality. (a) Variation of demand and delay rates. (b) Rate variation of unexpected failure and maintenance interventions. (c) Repair rate variation for corrective and preventive maintenance. (d) Test rate variation (repair again or not).

Table 5: The case study parameters.

Parameters	Value
λ_1	4
λ_2	2
λ_6	0.075
λ_{11}	0.01
λ_{12}	2
μ_9	0.34
μ_{10}	0.9
μ_{14}	0.13

summary makes it easier to determine the rates on which we must react to improve the performance.

Finally, we noticed that preventive maintenance improves the performance of joint management of spare parts and maintenance. The risks of stock-out and obsolescence are influenced by the delay rate. To minimize them, it is necessary to have a large value of the delay rate (i.e., a small value of the delay), which is logical.

The difference between the model proposed in [21] and this model of joint management is found at the level of the part added in the graph on maintenance which had to integrate its parameters (failure and repair rate) in the construction of performance indicators, i.e., its expressions are different between the two models. The indicators' expressions, in joint management, are based on the supply and maintenance parameters; on the contrary, in the management of spare parts, their expressions are based only on the supply parameters. So, their behavior will also be different and depend, in this paper, on the parameters of supply and maintenance according to the type of maintenance. Thus, the evaluation of maintenance by indicators is not considered in [21]. By comparing the two models, we can conclude that the

Table 6: Vector of the probability distribution of states: case study.

π_0	0.022889338945166487873277817877829
π_1	0.000344134852890871154483655081288 19
π_2	0.011444669472583243936638908938914
π_3	0.000480994025684468317909870207914 76
π_4	0.352143676079484428819658736581 98
π_5	0.274945093785029559249773992397 93
π_6	0.045778677890332975746555635755658
π_7	0.102726738337263791368047425731 09
π_8	0.000205453476674527582736094851462 19
π_9	0.092454064503537412231242683157984
π_{10}	0.002417099725582677443954057076025 7
π_{11}	0.000903092205162758605433383962471 15
π_{12}	0.000812782984646482744890045566224 04
π_{13}	0.000001806184410325517210866767924 23
π_{14}	0.000021249228356770790716079622646 38
π_{15}	0.000007939272133298976751062716153 5925
π_{16}	0.000007145344919969079075956444538 2333
π_{17}	0.000000015878544266597953502125432307185
π_{18}	0.000000186806403136446511789710968319 82
π_{19}	0.000000069795798974056938470881021130484
π_{20}	0.000000000139591597948113876941762042260 97
π_{21}	0.000000062816219076651244623792919017435
π_{22}	0.000000001642254093507222081667788732482
π_{23}	0.000000000613589441530170887656096889059 2
π_{24}	0.000000000276115248688576899445243600076 64
π_{25}	0.000000000000876556345043101268080138412941 71
π_{26}	0.000000000001753112690086202536160276825883 4
π_{27}	0.022889338945166487873277817877829
π_{28}	0.069526366769827958226504472358662

Table 7: Indicators: case study.

Indicators		Expression
Average stock S_{moy}		$S_{\text{moy}} = 4.566807350242151479613106133 4359$
Average storage cost CS_{moy}		$\text{CS}_{\text{moy}} = C_s * 4.566807350242151479613106133 4359$
Probability of the empty stock $\text{Prob}_{S=0}$		$\text{Prob}_{S=0} = 0.092759840569638429944352148853939$
Frequency of supply FA_{moy}		$\text{FA}_{\text{moy}} = 0.185519681693260469955944299134 53$
Average ordering cost CC_{moy}		$\text{CC}_{\text{moy}} = C_c * 0.185519681693260469955944299134 53$
Average purchase cost CA_{moy}		$\text{CA}_{\text{moy}} = C_a * 0.185519681693260469955944299134 53$
Coverage rate TC		$\text{TC} = 18.267229400968605918452424533744$
Average cost of inventory outage CR_{moy}		$\text{CR}_{\text{moy}} = C_{ru} * 0.092759840569638429944352148853939$
Probability of having a dead stock $\text{Prob}_{\text{DV}=0}$		$\text{Prob}_{\text{DV}=0} = 0.069870501622718829380988128439 95$
Cost of obsolescence CO_{moy}		$\text{CO}_{\text{moy}} = C_{\text{ob}} * 0.069870501622718829380988128439 95$
Unplanned failure frequency FPI_{moy}		$\text{FPI}_{\text{moy}} = 0.001716700420887486590495836340 8372$
Planned intervention frequency FIP_{moy}		$\text{FIP}_{\text{moy}} = 0.045778677890332975746555635755658$
Repair frequency	Corrective intervention FRc_{moy}	$\text{FRc}_{\text{moy}} = 0.001718755115844356075234302092 7045$
	Preventive intervention FRp_{moy}	$\text{FRp}_{\text{moy}} = 0.022889338945166487873277817877829$
Intervention duration Di_{moy}		$Di_{\text{moy}} = Di_u * 0.024608094061010843948512119970 5335$
Intervention quality	Good repair Q_{BRmoy}	$Q_{\text{BR,moy}} = 0.093274056201553438083607107852153$
	Bad repair Q_{MRmoy}	$Q_{\text{MR,moy}} = 0.013472919229113274389854360023089$
Intervention costs		$\text{CI}_{\text{moy}} = C_r + C_{th} * Di_u * 0.0246080 + C_p * 0.047495378 + C_{\text{vpu}} * Q_h * Di_u * 0.0246080940$

maintenance consideration has an influence on the management of the spare parts in a way to minimize the risks and the stock even if we will additional costs related to maintenance. These costs can be minimized along with the costs of spare parts by finding a combination of procurement and maintenance policies.

Table 8: The rates that influence the indicators.

Indicators		Rates							
		Demand rate	Delay rate	Unexpected failure rate	Rate of preventive maintenance interventions	Repair rate for corrective maintenance	Repair rate for preventive maintenance	Rate to repair again	Test success rate
Average stock S_{moy}		*			*	*	*	*	
Probability of the empty stock $Prob_{S=0}$			*	*		*	*	*	
Frequency of supply FA_{moy}		*	*	*		*	*	*	
Coverage rate TC		*			*	*	*	*	
Probability of having a dead stock $Prob_{DV=0}$			*	*		*	*	*	
Unplanned failure frequency FPI_{moy}		*		*		*	*		*
Planned intervention frequency FIP_{moy}		*			*	*	*	*	
Repair frequency	Corrective intervention FRc_{moy}	*		*		*	*		*
	Preventive intervention FRp_{moy}	*			*	*	*	*	
Intervention quality	Good repair Q_{BRmoy}	*		*		*	*	*	
	Bad repair Q_{MRmoy}	*		*		*	*		*

6. Conclusion

In this paper, we have treated the performance evaluation of joint management of spare parts and maintenance through indicators that are developed from our model presented in our previous works. The indicators are evaluated in the form of a presentation of the rate effects (model parameters) on the proposed indicators. This presentation is made in the form of cases by varying two rates that we want to see their effects on the indicators, and the other parameters are fixed. From this analytical study, we were able to determine the parameters that have a great influence on our considered model.

Among these parameters, the demand rate influences all the indicators. Preventive maintenance improves joint management. To avoid and eliminate the risks, it is necessary to intervene on the delay rate. Of course, maintenance management is always linked to production in addition to the spare parts' management. Corrective maintenance will take place when the asset is stopped (broken down). For preventive maintenance, interventions with production must be well planned.

Certainly, the maintenance and spare parts are an important part of the production and necessary to continue the service. So, we want to assess in our future works the link between maintenance and production with spare parts' management. On the other way, we will treat this axis by integrating the production plan with the joint management of maintenance and spare parts.

Data Availability

The data used to support the findings of this study are available from the corresponding author upon request.

Conflicts of Interest

The authors declare that there are no conflicts of interest regarding the publication of this paper.

References

[1] H. Kaffel, *La Maintenance Distribuée :Concept, Évaluation et Mise en Œuvre, Thèse de Doctorat, Faculté des Sciences et de Génie*, Université Laval, Québec City, Canada, 2001.

[2] P. J. Siddique, H. T. Luong, and M. Shafiq, "An optimal joint maintenance and spare parts inventory model," *International Journal of Industrial and Systems Engineering*, vol. 29, no. 2, pp. 177–192, 2018.

[3] O. Bounou, A. El Barkany, and A. El Biyaali, "Inventory models for spare parts management: a review," *International Journal of Engineering Research in Africa*, vol. 28, pp. 182–198, 2017.

[4] R. Abbou, Z. Simeu-Abazi, and M. Di Mascolo, "Les réseaux de Pétri pour la modélisation et l'analyse des performances d'un atelier de maintenance," in *Proceedings of the 4e Conférence Francophone de MOdélisation et SIMulation Organisation et Conduite d'Activités dans l'Industrie et les Services, MOSIM'03*, Toulouse, France, April 2001.

[5] K. Labadi, *Contribution à la modélisation et à l'évaluation de performances des systèmes logistiques à l'aide d'un nouveau modèle de réseaux de pétri stochastiques*, Sciences de l'ingénieur, Universités de technologies de Troyes, Troyes, France, 2005.

[6] C. Diallo, "Développement d'un modèle d'identification et de gestion des pièces de rechange," Université Laval, Quebec City, Canada, thèse de doctorat, 2006.

[7] K. S. Smidt-Destombes, M. Van Der Heijden, and A. Van Harten, "Joint optimisation of spare part inventory, maintenance frequency and repair capacity for k-out-of-N systems," *International Journal of Production Economics*, vol. 118, no. 2, pp. 260–268, 2009.

[8] I. Ayadi, L. Bouillant, P. Aknin, and P. Siarry, "Optimisation par algorithme génétique de la maintenance préventive dans un contexte de modélisation par modèles graphiques probabilistes," in *Proceedings of the 17th Risk Control and Dependability Conference*, Institue de la maîtrise des risques, LambdaMu17, La Rochelle, France, 2010.

[9] M. Bayarassou, *Une approche d'évaluation et d'amélioration du service maintenance basée sur la simulation–cas de l'entreprise BAG-Batna*, Universite Hadj Lakhdar Batna, Faculté des Sciences de l'Ingénieur, Batna, Algeria, 2010.

[10] W. Wang, "A joint spare part and maintenance inspection optimisation model using the Delay-Time concept," *Reliability Engineering & System Safety*, vol. 96, no. 11, pp. 1535–1541, 2011.

[11] A. Brezavšček, "Simple stochastic model for planning the inventory of spare components subject to wear-out," *Organizacija*, vol. 44, no. 4, pp. 120–127, 2011.

[12] R. Fritzsche and R. Lasch, "An integrated logistics model of spare parts maintenance planning within the aviation industry," World Academy of Science, Engineering and Technology, Paris, France, 2012.

[13] R. J. I. Basten, M. C. van der Heijden, J. M. J. Schutten, and E. Kutanoglu, "An approximate approach for the joint problem of level of repair analysis and spare parts stocking," *Annals of Operations Research*, vol. 224, no. 1, pp. 121–145, 2012.

[14] W. Wenbin, "A stochastic model for joint spare parts inventory and planned maintenance optimization," *European Journal of Operational Research*, vol. 96, pp. 127–139, 2012.

[15] A. S. Babu, U. Sanghi, A. U. Rehman, A. M. A. Shayea, and M. A. F. Sharaf, "A model to derive software maintenance policy decision," *International Journal of Productivity and Quality Management*, vol. 11, no. 3, pp. 247–268, 2013.

[16] J. Fattah, L. Ezzine, H. El Moussami, and A. Lachhab, "Analysis of the performance of inventory management systems using the SCOR model and batch deterministic and stochastic petri nets," *International Journal of Engineering Business Management*, vol. 8, pp. 1–11, 2016.

[17] C. Diallo, A. Khatab, U. Venkatadri, and E.-H. Aghezzaf, "A joint selective maintenance and multiple repair-person assignment problem," in *Proceedings of the 7th IESM Conference*, pp. 317–322, Saarbrucken, Germany, October 2017.

[18] N. MohdNoor, N. Z. Zaibidi, and Z. Hanafi, "An integration model of planned maintenance and spare parts inventory for periodic order policy," *International Journal of Supply Chain Management*, vol. 7, no. 1, pp. 144–148, 2018.

[19] S. Rahimi-Ghahroodi, A. Al Hanbali, I. M. H. Vliegen, and M. Cohen, "Joint optimization of spare parts inventory and service engineers staffing with full backlogging," *International Journal of Production Economics*, vol. 212, pp. 39–50, 2019.

[20] A. Khatab, C. Diallo, E. H. Aghezzaf, and U. Venkatadri, "Joint optimization of the selective maintenance and repairperson assignment problem when using new and

remanufactured spare parts," *IFAC-PapersOnLine*, vol. 52, no. 13, pp. 1063–1068, 2019.

[21] O. Bounou, A. El Barkany, and A. El Biyaali, "The performance evaluation of the spare parts management: case study,," *Management and Production Engineering Review*, vol. 10, no. 2, pp. 37–49, 2019.

[22] O. Bounou, A. El Barkany, and A. El Biyaali, "Stochastic and deterministic Stochastic and deterministic petri networks model for joint management model for spare parts and maintenance: simulation study," *International Journal of Engineering Research in Africa*, vol. 46, pp. 180–188, 2020.