Hindawi
Journal of Engineering
Volume 2022, Article ID 1280865, 11 pages
https://doi.org/10.1155/2022/1280865

Research Article

Study on the Tooth Profile Parameters Design Method of Crown Gear Coupling for Helicopter Tail Folding Device

Miaomiao Li,[1] **Zhao Zhang**,[1] **Xi Wang**,[2] **Shuai Liu**,[1] **and Rupeng Zhu**[1]

[1]*Nanjing University of Aeronautics and Astronautics, Nanjing 210000, Jiangsu, China*
[2]*China Aviation Power Machinery Research Institute, Zhuzhou 412000, Hunan, China*

Correspondence should be addressed to Miaomiao Li; limiaomiao@nuaa.edu.cn

Received 9 May 2022; Revised 3 July 2022; Accepted 15 July 2022; Published 9 August 2022

Academic Editor: Hongfu Zhang

Shipboard helicopter folding technology can increase the number of helicopters parked on board aircraft carriers. Crown gear coupling is the trend in helicopter tail rotor folding technology due to its ability to automatically and quickly engage and disengage helicopter tail rotors. This paper presents a method for the design of tooth parameters for crown gear coupling for folding devices. The model of the relationship between tooth shape parameters and angular displacement of the crown gear coupling and the model of the relationship between angular displacement and shaft line angle of the crown gear coupling were established, respectively, and the basic parameters of tooth shape and modified parameters of the crown gear coupling were designed. The correctness of the design method of the tooth parameters of the crown gear coupling for the folding device was also verified through motion simulation. The results of the study provide a theoretical basis for the design and optimization of crown gear couplings for folding devices.

1. Introduction

Helicopter folding technology is a workaround for storing more parked helicopters on the aircraft carrier deck and hangar. As an important technology for carrier-based aircraft, it has been widely used and developed [1]. Currently, helicopter folding technologies include rotor folding and tail drive shaft folding. The existing helicopter tail folding mechanism mainly adopts end-tooth connection, and the two intermeshing end-tooth are, respectively, installed on the fuselage and the tail to realize the folding of the tail beam, such as Changhe Z-8 helicopter [2]. But a major drawback of this folding method is that it requires multiple people to operate at the same time to complete the joining or opening of the tail beam. The operation is laborious and extremely inconvenient, which severely restricts the joining and opening speed of the tail beam, and fails to realize automation. Watson et al. proposed a drive shaft folding device composed of a single toothed coupling, the main component of which is composed of a pair of toothed couplings, wherein the outer teeth of the coupling are involute gear teeth, and the outer teeth are gradually tapered from the front edge to the rear, and the entire outer tooth connecting section is formed into a conical shape as a whole, which is beneficial to the unfolding and folding of the folding device [3]. Baldino thought of a folding mechanism composed of a double spline coupling, which makes the inner and outer teeth of the double spline disengage and contact by pushing the axial movement of the inner teeth of the spline [4]. YiGuo et al. proposed a calculation method considering the bending and shear deformation of the coupling gear tooth drum modification and verified the correctness of the model through experiments [5]. Compared with the end-tooth folding mechanism, the crown gear folding mechanism can realize automatic and rapid engagement and disengagement of the tail drive shaft, which greatly reduces the preparation time of the helicopter before and after the aircraft and improves the responsiveness and agility of the carrier-based helicopters.

Crown gear coupling is a key component of the folding device, which can compensate the radial, axial, angular, and comprehensive displacement between the two shafts and transmit a wide range of torque. The allowable speed is also higher than that of the straight-tooth coupling. More and more crown gear coupling is widely used in various mechanical equipment such as transportation, metallurgy, mining, and chemical industry. [6].

Many researchers have studied the design and manufacturing technology of crown gear couplings. MUCCHI took the elliptical drum tooth as the research object, gave the equation of motion at the contact point by comprehensively considering the motion of tooth surface center and the tooth surface curvature center, and extended the equation of motion to the circular tooth face drum tooth based on this [7]. Yi C. established the equations of the inner and outer tooth surfaces of the nonconjugated tooth surface crown gear coupling, carried out the computational analysis of the meshing state aiming at the meshing situation of the nonconjugated tooth surface, and conducted the kinematic study of the crown gear coupling [8]. Zhenqiang Shi et al. used the lumped mass method to deduce the mechanical model of the drum tooth coupling that only considers torsional vibration and verified the accuracy of the mechanical model through finite element analysis of an example [9]. E. Wildhaberw studied the amount of tooth surface modification of crown gear with different radians and proposed a machining method in which the tool machining plane and the tooth top plane are parallel, and the machining center passes through the centerline of the tooth width and rotates to produce a drum surface with narrow ends and wide middle [10]. Jozsef S. et al. proposed the mathematical model of the crown gear coupling and proposed a method of machining the drum-shaped tooth surface by the displacement circle of the external teeth. This method has the characteristics of simple processing and high precision [11]. The drawing and manufacturing of the tooth surface of the crown gear coupling provide a reference. Jiaqi Wei established the simulation model of the crown gear coupling through spectrum analysis and found that its frequency is more sensitive to rotation through frequency spectrum analysis. [12].

In order to obtain better crown gear couplings, many scholars have carried out research on the characteristics of crown gear. V. Cuffaro et al. proved that the wear patterns of the drum teeth are completely different, and the presence of misalignment and lubrication may have an important impact on surface damage through experimental analysis [13]. Y. Guan et al. compared three different processing methods of crown gear couplings, established their finite element models, respectively, and verified the accuracy of the processing methods by simulating load contact and distribution [14]. Yanzhe Wu have used Ansys to analyze the contact stress and deformation of the tooth surface and the distribution of contact stress in the meshing process of the crown gear coupling and compared it with the traditional Hertz theory, proving that Ansys simulated crown gear coupling; it works [15]. M. A. Alfares analyzed the situation that parts of the gears are prone to overload when the drum gear coupling is running under the condition of misalignment [16]. Francesca et al. studied the tilting moment of the crown gear coupling in the case of axis misalignment by means of theory and finite element simulation. The results show that the tilting moment presents a nonlinear trend: superior performance without misalignment [17]. Haitao Zhang modeled the crown gear coupling based on ANSYS and conducted a simulation study on its contact strength [18]. Qing Bi used the finite element analysis method to complete the contact analysis of the single tooth in the centered condition and the full tooth of the drum tooth in the noncentered condition [19].

Based on the above analysis, the research on crown gear couplings is mainly about design methods, processing methods, and some kinematic characteristics, while there are few studies on crown gear couplings used in folding mechanisms. This article proposes a design method for the angular displacement of the crown gear coupling, under the premise of satisfying the kinematic characteristics of the folding mechanism, and the determined angular displacement of the crown gear coupling is the smallest, which makes its strength performance the best. Based on determining the angular displacement of the crown gear coupling, the modification parameters of the drum tooth are carried out, which provides a method for processing the drum tooth that meets the requirements of angular displacement.

2. Design of the Tooth Profile Parameters of Crown Gear Coupling

2.1. Working Principle of Folding Device. Figure 1 shows a helicopter tail paddle drive system folding device using a crown gear coupling [3], including a body and a tail rotor that can be folded along the rotating shaft *C*. After folding, the tail rotor extends laterally downwardly to the body to save space. The internal teeth on the output flange and the external teeth on the drum pickup plate form a crown gear coupling, which can realize the tail transmission portion 9 rotating around the axis *C*, causing the output flange and the crown gear disk to disengage and disconnect the input shaft from the output shaft. Therefore, the design of the tooth shape of the crown gear coupling is the key, which determines whether the folding mechanism can be properly engaged and disengaged (from the design manual of crown gear coupling).

It is known that the tooth shape of crown gear coupling depends on its angular displacement [20]. If the angular displacement of the crown gear coupling is designed too small, it cannot realize the folding of the tail drive part; if it is too large, it will affect the strength and dynamic characteristics of the crown gear coupling in the state of engagement and reduce its performance. Therefore, it is necessary to determine the minimum angular displacement of the crown gear coupling that can achieve the folding of the tail drive section and thus obtain the tooth shape parameters of the crown gear coupling.

As can be seen from Figure 1, when the tail drive section is folded around the axis of rotation, the trajectory of the inner and outer tooth axes of the crown gear coupling is

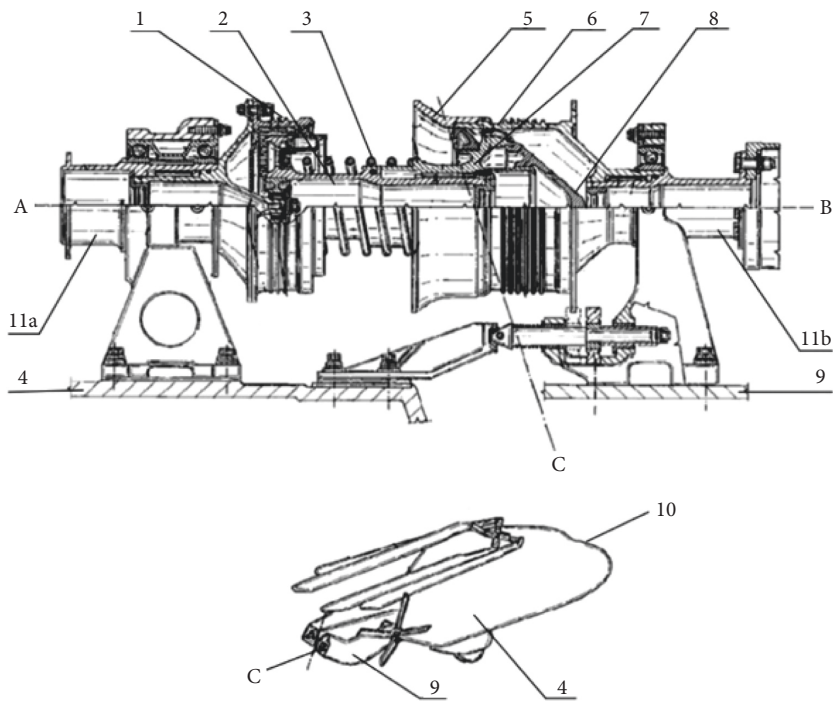

Figure 1: Two-dimensional structural diagram of folding device of the helicopter tail paddle drive system [5]. (1) Input flange. (2) Spline shaft. (3) Spring. (4) Fuselage. (5) Lead-in element disk. (6) Output flange. (7) Drum tooth. (8) Centering warhead. (9) Tail rotor. (10) Helicopter. (11(a)) Input shaft. (11(b)) Output shaft.

determined if the tilt angle and position of the axis of rotation C are determined. Therefore, if the relationship between the angle between the internal and external tooth disengagement instantaneous axes of the crown gear coupling and the angular displacement of the crown gear coupling is found, the minimum angular displacement of the crown gear coupling that can meet the folding requirements can be determined.

2.2. Modeling of the Relationship between Tooth Modification Parameters and Angular Displacement. As shown in Figure 2, the outer teeth on the drum tooth disk and the inner teeth on the output flange mesh to form a crown gear coupling, and the output flange can rotate around the axis of rotation C. During the rotation of the output flange, the inner and outer teeth of the crown gear coupling are disengaged and joined. The width of the outer teeth on the drum tooth disk is shown in Figure 3, with a tooth width of 22 mm, including the drum tooth part with a width of b1 and the chamfered part with a width of b2, where the chamfered part plays a guiding role in the mechanism joining process. The basic parameters of the tooth shape of crown gear coupling are given in Table 1. According to the basic parameters of the tooth type of the crown gear coupling, the model of the relationship between the angular displacement of the crown gear coupling and the tooth modification parameters can be established, and the modification parameters of the crown gear coupling can be determined according to the angular displacement of the crown gear coupling.

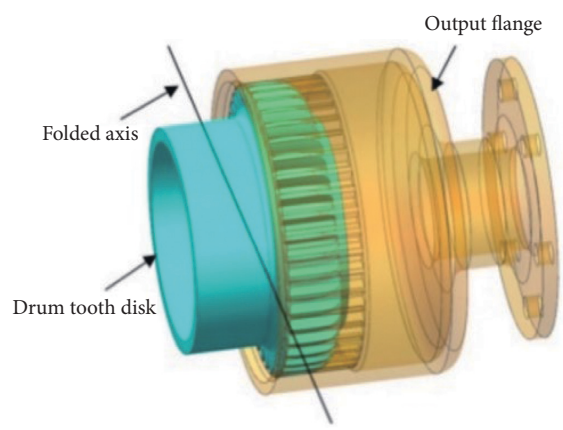

Figure 2: Diagram of the engagement of the crown gear coupling.

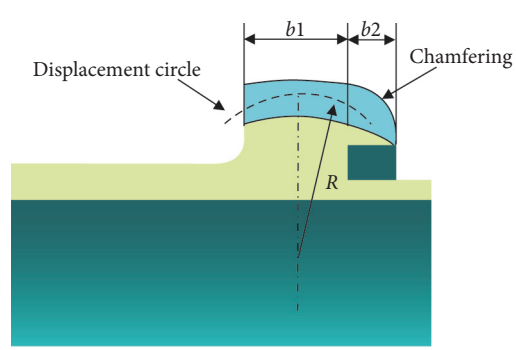

Figure 3: Three-dimensional half-cut view of drum tooth disk (partial).R, radius of displacement circle; b1, width of drum tooth section; b2, width of chamfered part.

Table 1: Basic parameters of the drum teeth joint shaft.

Parameters	Value
Modulus (mm)	2.5
Number of teeth	44
Pressure angle α (°)	20
Tooth width b1 (mm)	15

2.2.1. Tangential Displacement. Since the two shafts connected to the crown gear coupling have a relative angular displacement, the crown gear coupling is repeated in the center of the circumferential tangential direction, and in order to prevent motion interference, it is necessary to consider the tangential displacement f_{tkb} of crown gear coupling caused by angular displacement. Figure 4 shows the angular displacement of the drum tooth, from which it can be seen that when the inner and outer teeth of the crown gear coupling are aligned, the minimum distance between the outer tooth and the inner tooth on one side is $0.5f_{tkb}$.

Whether the inner and outer teeth of the crown gear coupling are in alignment or not, the contour radius of curvature R_t of the outer tooth profile remains the same, that is,

$$R_t = OF = OA + AF, \tag{1}$$

$$R_t = OD = OB + BC + CD. \tag{2}$$

So,

$$OA = R_t - 0.5S_{a1}, \tag{3}$$

$$R_t = OA \cos \Delta\alpha + 0.5S_{a1} + 0.5f_{tkb}, \tag{4}$$

where R_t is the contour radius of curvature; $\Delta\alpha$ is the angular displacement of drum tooth; S_{a1} is the tooth thickness of the drum tooth; f_{tkb} is the tangential displacement.

Tooth thickness of the drum tooth is

$$S_{a1} = \frac{\pi m}{2}, \tag{5}$$

where m is the modulus.

Combining (3), (4), and (5), we get

$$\left(R_t - \frac{\pi m}{4}\right)\cos \Delta\alpha + \frac{\pi m}{4} + \frac{f_{tkb}}{2} = R_t. \tag{6}$$

The relationship between tangential displacement and angular displacement is obtained by rectifying (6):

$$f_{tkb} = \left(2R_t - \frac{\pi m}{2}\right)(1 - \cos \Delta\alpha), \tag{7}$$

where $b1$ is the tooth width; f_{tkb} is the tangential displacement; $S_{a1}$is the tooth thickness of the drum tooth; R_t is the contour radius of curvature; $\Delta\alpha$is the angular displacement of drum tooth; A is the intersection point of external tooth width centerline and tooth slot centerline; F is the intersection point of external tooth profile and tooth slot centerline; D is the right limit point of external tooth profile; B is the intersection point of radius of tooth profile at point D and tooth slot centerline; C is the intersection point of radius of tooth profile at point D and external tooth width centerline.

2.2.2. Single-Sided Thinning of Working Circle Section of External Tooth. Figure 5 shows a schematic diagram of the curved surface of the outer tooth profile of the drum tooth. It can be seen from the figure that the relationship between the single-sided thinning on the working circle section of external tooth of the crown gear coupling g_t and the radius of curvature of the tooth profile R_t is as follows:

$$R_t^2 = (R_t - g_t)^2 + \left(\frac{b_1}{2}\right)^2. \tag{8}$$

The result is

$$R_t = \frac{g_t}{2} + \frac{b_1^2}{8g_t}, \tag{9}$$

where g_t is the single-sided thinning on the working circle section of external tooth of the crown gear coupling (mm); $b1$ is the tooth width of external teeth of crown gear coupling (mm).

It can be seen from the view B in Figure 5 that

$$R_t \cos \Delta\alpha + g_t = R_t. \tag{10}$$

Combining (9) and (10) together, the relationship between single-sided thinning of working circle section of external tooth g_t and the angular displacement $\Delta\alpha$ can be obtained as

$$g_t = \frac{b_1}{2} \tan \Delta\alpha, \tag{11}$$

where $b1$ is the tooth width of external teeth of crown gear coupling (mm); $\Delta\alpha$ is the angular displacement of crown gear coupling.

2.2.3. Radius of Displacement Circle. The displacement circle is the machining path of the tool in the process of machining the drum tooth. As can be seen in Figure 5, the displacement circle is the radius R of the indexing circle curve along the tooth length in the cross section through the tooth width axis, and its size is [21]

$$R = \frac{g_t}{2} \frac{\cos \alpha}{\sin(\alpha + 90/Z)} + \frac{b_1^2 \sin(\alpha + 90/Z)}{8g_t \cos \alpha}, \tag{12}$$

where g_t is the single-sided thinning on the working circle section of external tooth of the crown gear coupling (mm); Z is the number of teeth of the drum tooth; α is the pressure angle of the graduated circle (°); b1 is the tooth width of external teeth of crown gear coupling (mm).

2.3. Modeling of the Relationship between Angular Displacement and Axis Angle. Figure 6 shows a schematic diagram of

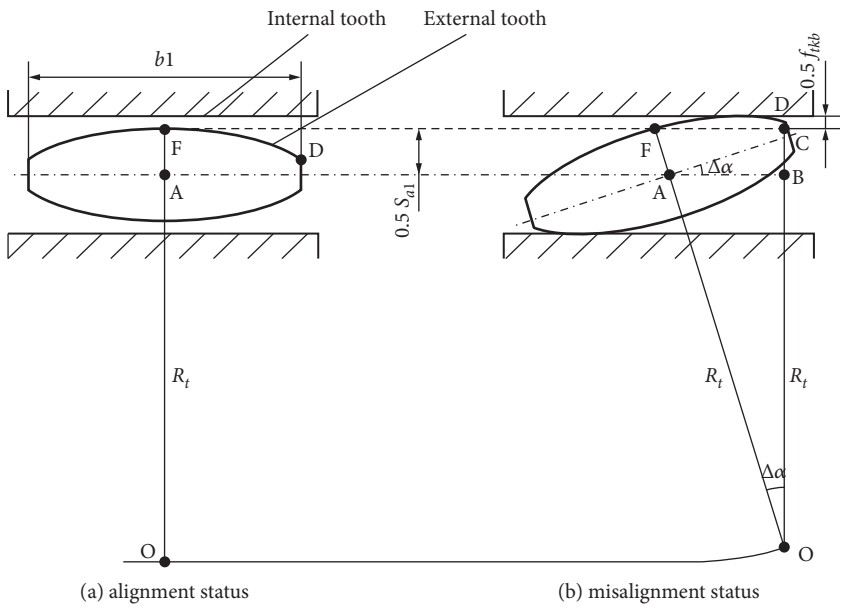

Figure 4: Schematic diagram of angular displacement of crown gear coupling.

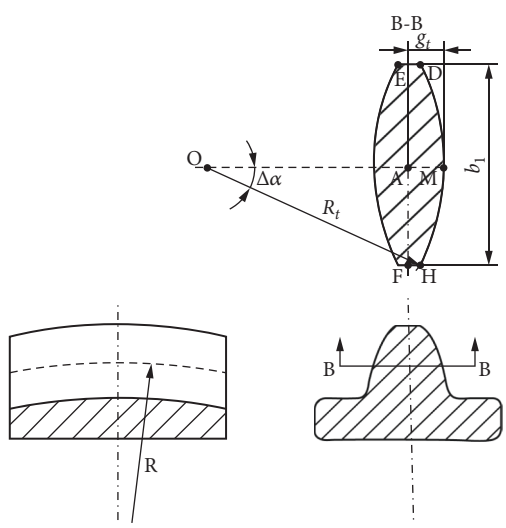

Figure 5: Schematic diagram of the outer tooth profile surface of the drum tooth [21].

the relationship between the axis angle between the drum tooth disk and the output flange γ and the angular displacement $\Delta\alpha$ during the unfolding process of the folding device. When the folding device is disengaged, the output flange rotates counterclockwise around the folding axis, so that the axis of the output flange and the drum gear disk are misaligned. And, as the rotation angle of the output flange around the axis of rotation increases, the axis angle between the drum tooth disk and the output flange γ increases. When the right limit point of the outer tooth profile of the drum gear is in contact with the internal teeth, the axis angle between the drum tooth disk and the output flange γ is equal to the angular displacement $\Delta\alpha$ of the drum gear coupling, as shown in Figure 6(a). As the rotation angle of the output flange around the axis of rotation increases, the external teeth of the drum tooth disk escape from the internal tooth grooves of the output flange, as shown in Figure 6(b). Currently, the axis angle between the drum tooth disk and the output flange γ is bigger than the angular displacement of the crown gear coupling $\Delta\alpha$. When the output flange is about to separate from the drum tooth disk, the axis angle between the drum tooth disk and the output flange γ reaches the maximum, which is recorded as $\gamma_{\max}$, as shown in Figure 6(c). Therefore, when the folding mechanism is disengaged, the axis angle between the drum tooth disk and the output flange γ changes, and it is necessary to find out the relationship between the maximum axis angle between the drum tooth disk and the output flange $\gamma_{\max}$ and the

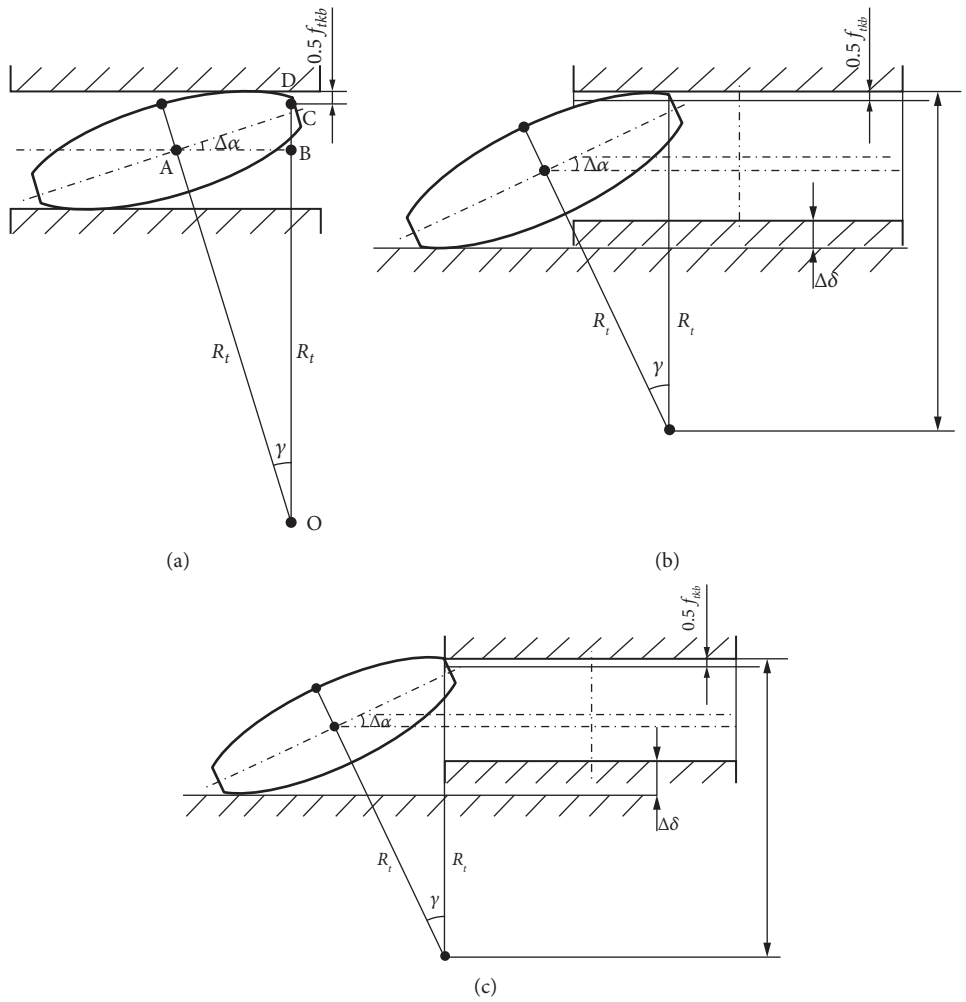

Figure 6: Schematic diagram of the relationship between the axis angle between the drum tooth disk and the output flange γ and the angular displacement $\Delta\alpha$. (a) The internal teeth of the drum tooth disk are completely in the external teeth of the output flange. (b) The internal teeth of the drum tooth disk are partially out of the external teeth of the output flange. (c) The internal teeth of the drum tooth disk are about to completely escape from the external teeth of the output flange.

angular displacement $\Delta\alpha$ of the crown gear coupling to determine the angular displacement of the crown gear coupling $\Delta\alpha$.

Drawing lessons from the analysis method (in (3)) of the relationship between the radius of curvature of the tooth profile R_t, the angular displacement $\Delta\alpha$, and the tangential displacement f_{tkb}, it is assumed that, at the moment when the output flange is about to be separated from the drum tooth disk, there is a virtual drum tooth internal tooth, as shown by the dotted line in Figure 6. Its internal teeth just contact the external teeth of the drum tooth disk, and then the internal teeth of the virtual drum tooth and the drum tooth disk form a virtual crown gear coupling. At this time, the maximum axis angle between the drum tooth disk and the output flange $\gamma_{\max}$ is equal to the angular displacement of the virtual crown gear coupling $\Delta\alpha'$. The backlash between the internal and external teeth of the virtual crown gear coupling is

$$f'_{tkb} = f_{tkb} + \Delta\delta_{\max}. \tag{13}$$

So, (6) can be written as

$$f_{tkb} + \Delta\delta_{\max} = \left(2R_t - \frac{\pi m}{2}\right)(1 - \cos\gamma_{\max}). \tag{14}$$

It can be seen from Figure 6(c) that

$$DJ = f_{tkb} + \Delta\delta_{\max} + \frac{\pi m}{2}. \tag{15}$$

Line segment DJ can also be represented by the sum of line segment DK, line segment KG, and line segment GJ, that is,

$$\begin{aligned} DJ &= DK + KG + GJ \\ &= DE\cos\gamma_{\max} + EF\sin\gamma_{\max} + FH\cos\gamma_{\max} \\ &= \left(\frac{\pi m}{4} - g_t\right)\cos\gamma_{\max} + b_1\sin\gamma_{\max} \\ &\quad + \left(\frac{\pi m}{4} - g_t\right)\cos\gamma_{\max} \\ &= b_1\sin\gamma_{\max} + \left(\frac{\pi m}{2} - 2g_t\right)\cos\gamma_{\max}. \end{aligned} \tag{16}$$

Combining (15) and (16), we get

$$f_{tkb} + \Delta\delta_{\max} + \frac{\pi m}{2} = b_1\sin\gamma_{\max} + \left(\frac{\pi m}{2} - 2g_i\right)\cos\gamma_{\max}, \tag{17}$$

so that

$$\Delta\delta_{\max} = b_1\sin\gamma_{\max} + \left(\frac{\pi m}{2} - 2g_t\right)\cos\gamma_{\max} - f_{db} - \frac{\pi m}{2}. \tag{18}$$

2.4. Determination of the Tooth Profile Parameters. Combining (7), (14), and (18), we get

$$\begin{cases} f_{tkb} = \left(2R_t - \dfrac{\pi m}{2}\right)(1 - \cos\Delta\alpha) \\ f_{tkb} + \Delta\delta_{\max} = \left(2R_t - \dfrac{\pi m}{2}\right)(1 - \cos\gamma_{\max}) \\ \Delta\delta_{\max} = b_1\sin\gamma_{\max} + \left(\dfrac{\pi m}{2} - 2g_t\right)\cos\gamma_{\max} - f_{ub} - \dfrac{\pi m}{2} \end{cases}, \tag{19}$$

where R_t is the contour radius of curvature (mm); $\Delta\alpha$ is the maximum angular displacement; f_{tkb} is the tangential displacement (mm); $\gamma_{\max}$ is the maximum axis angle between the drum tooth disk and the output flange; $\Delta\delta_{\max}$ is the maximum deviation of tangential displacement.

When the maximum angle $\gamma_{\max}$ between axes has been given, according to (19) and the basic parameters of the drum tooth in Table 1, the angular displacement and various modification parameters of the crown gear coupling are obtained, as given in Table 2.

3. Verification of Tooth Shape Parameters Based on Motion Simulation

In order to verify the correctness of the design method of crown gear coupling and at the same time to verify that the designed drum-shaped gear coupling can disengage the folding device smoothly, the motion of the crown gear coupling is simulated to obtain the angular displacement that can be deflected under the force condition.

Table 2: Tooth profile parameters of crown gear coupling.

Parameters		Value
Basic parameters	Modulus (mm)	2.5
	Number of teeth	44
	Pressure angle α (°)	20
	Tooth width $b1$ (mm)	15
Modification parameters	Angular displacement of coupling $\Delta\alpha$ (°)	2.3
	Radius of displacement circle R (mm)	37.699
	Single-sided thinning g_t (mm)	0.301
	Tangential displacement f_{tkb} (mm)	0.208

3.1. Model Verification of the Relationship between Tooth Profile Parameters and Angular Displacement. According to the parameters in Table 2, the solid models of the drum tooth disk and the output flange are established, respectively, as shown in Figure 7.

According to the established solid model of the drum tooth disk and the output flange, the crown gear coupling is assembled, as shown in Figure 8(a). A crown gear coupling movement simulation model is established, as shown in Figure 8(b). The motion simulation of the crown gear coupling is carried out by applying fixed constraints on the drum tooth disk and radial forces on the output flange. The change curve of the swing angle of the output flange axis during the movement of the crown gear coupling is shown in Figure 9. It can be seen from Figure 9 that when the crown gear coupling is disengaged, the swing angle of the output flange axis is 2.2566°, and the angular displacement of the drum gear coupling is 2.2566°. The error between this and the expected design value of 2.3° is 1.9%, which proves the correctness of the relationship between the tooth profile parameters and the angular displacement of the crown gear coupling established in this paper.

3.2. Model Verification of the Relationship between Angular Displacement and Axis Angle. The indirect measurement method can be used to obtain the angle between the drum tooth disk and the axis of the output flange. During the disengagement process of the folding mechanism, the axis of the drum tooth disk and the axis of the output flange always intersect at one point, so the axis of the drum tooth disk and the axis of the output flange are on the same plane. As shown in Figure 10, make an auxiliary line to form a triangle with the axis of the drum tooth disk and the axis of the output flange. Using the principle that the external angle of a triangle is equal to the sum of nonadjacent internal angles, obtain the angle between the axis of the arc tooth disc and the auxiliary line γ_1 and the angle between the axis of the output flange and the auxiliary line γ_2 through simulation;

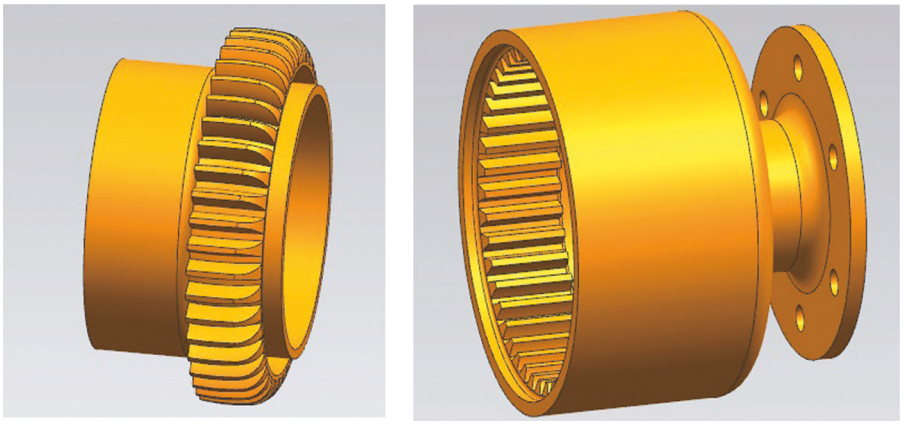

(a) (b)

Figure 7: Three-dimensional model of drum gear coupling. (a) The solid model of the drum tooth disk. (b) The solid model of the output flange.

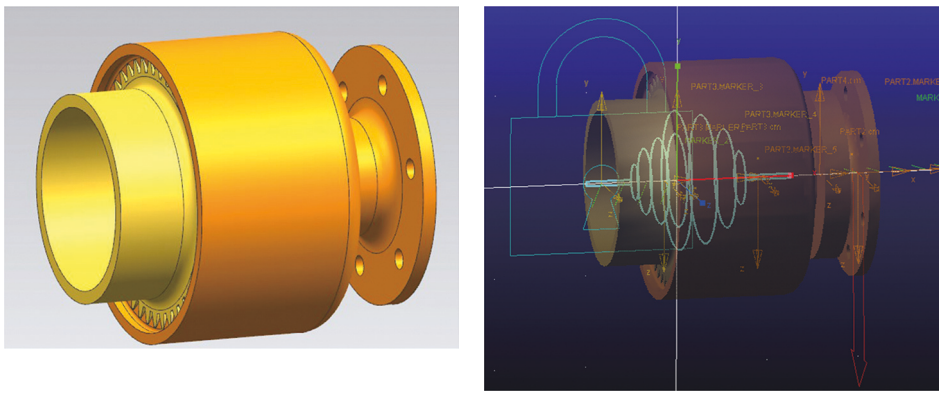

(a) (b)

Figure 8: The solid model and kinematic simulation model of the crown gear coupling. (a) The solid model of the crown gear coupling. (b) The kinematic simulation model of the crown gear coupling.

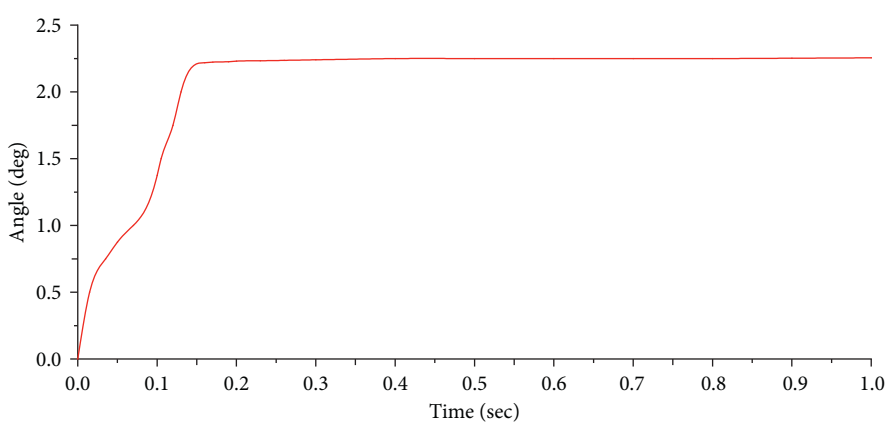

Figure 9: The curve of the axis swing angle of the output flange during the disengagement of the crown gear coupling.

then, the angle between the drum tooth disk and the axis of the output flange γ can be obtained.

Based on the motion simulation model of crown gear coupling established in Figure 8(b), a moment load is applied to the output flange to make it rotate around the folding axis shown in Figure 2 to perform the output method simulation of the disengagement movement of the flange and drum tooth disk. The simulation analysis obtained the change

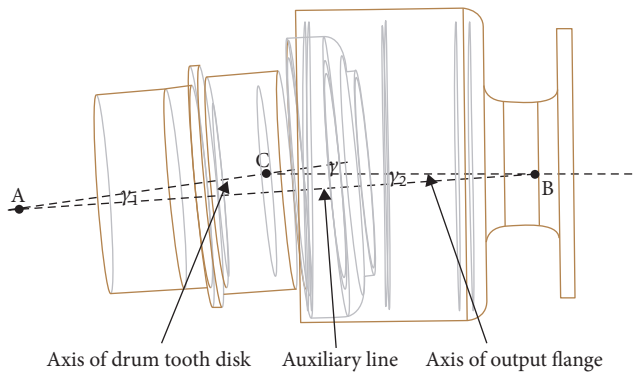

Figure 10: Schematic diagram of the angle between the drum tooth disk and the axis of the output flange.

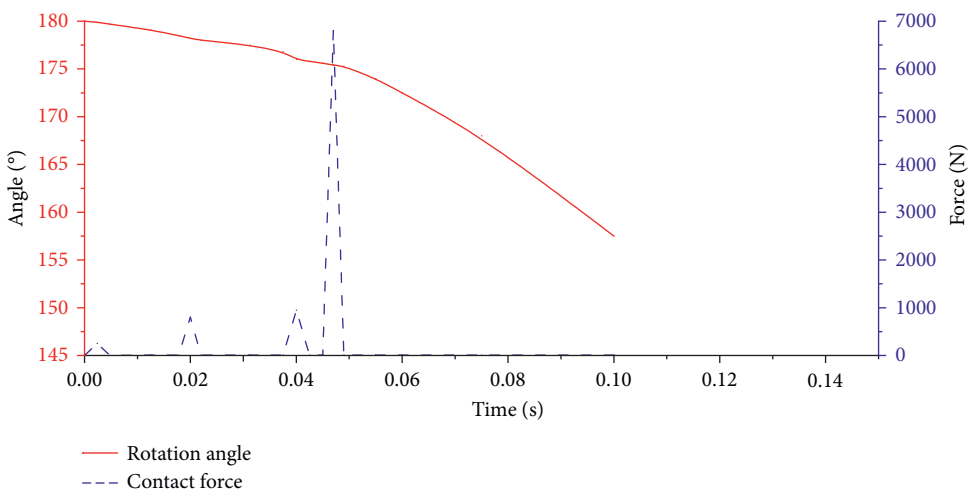

Figure 11: The curve of the complementary angle change of the angle between the axis of the drum tooth disk and the auxiliary line.

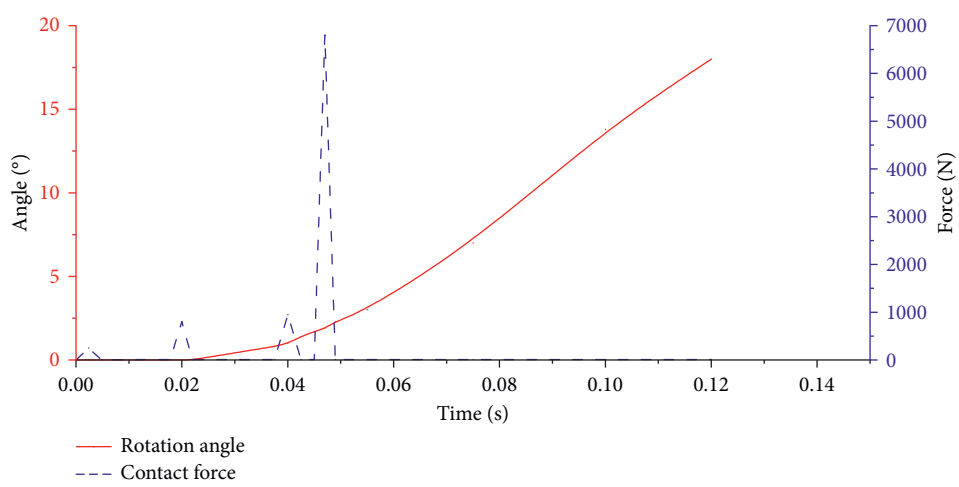

Figure 12: The change curve of the angle between the axis of the output flange and the auxiliary line.

process of the angle between the axis of the drum tooth disk and the auxiliary line and the angle between the axis of the output flange and the auxiliary line during the disengagement process of the folding mechanism, as shown in Figure 11 and Figure 12.

It can be seen from the position of the ruler in Figure 11 that when the contact force between the drum tooth disk and the output flange is 0°, the folding mechanism is disengaged. Currently, the angle between the curved toothed disc axis and the auxiliary line γ_1 is 3.894°(180°-Y), and the angle between the axis of the output flange and the auxiliary line γ_2 is 0.9603°. Therefore, the angle between the drum tooth disk and the axis of the output flange γ can be obtained as 4.8543°. According to the angle relationship between the maximum angular displacement of the crown gear coupling and the axis shown in (19), the maximum angular displacement of the crown gear coupling is 2.293°. It can be seen that when the folding device is disengaged, the error between the theoretical angular displacement and the simulation result is 0.3%, which verifies the correctness of the theoretical calculation.

4. Conclusion

This paper proposes a method for designing the tooth profile parameters of the crown gear coupling used in the folding device and verifies it through kinematics simulation.

(1) The kinematic simulation results of the crown gear coupling used in the folding device under radial load show that when the drum gear plate is fixed, the angular displacement of the axis is 2.2566°, and the error between this and the theoretical calculation result is 1.9%, which verifies the correctness of the model of the relationship between the tooth profile parameters of the crown gear coupling and the angular displacement.

(2) The relationship between the angular displacement and the axis angle of the crown gear coupling was obtained by simulating the motion of the crown gear coupling used in the folding device. When the crown gear coupling is disengaged, the angle between the drum tooth disk and the axis of the output flange is 4.8543°. According to the angle relationship between the maximum angular displacement of the crown gear coupling and the axis, the maximum angular displacement of the crown gear coupling is 2.293°. It can be seen that when the folding device is disengaged, the error between the theoretical angular displacement and the simulation result is 0.3%, which verifies the correctness of the theoretical calculation. The research results lay a theoretical foundation for the design and optimization of the crown gear coupling used in the folding device.

Data Availability

The data used to support the findings of this study are included within the article.

Conflicts of Interest

The authors declare that there are no conflicts of interest.

Acknowledgments

This work was supported by the National Key Laboratory of Science and Technology on Helicopter Transmission (HTL-A-22G05).

References

[1] G. Zhao, *Design and Research of Tail Beam Electric Folding System in a Shipboard Helicopter*, Chongqing University, Chongqing China, 2018, in Chinese.

[2] X. Song, *Designing of Tail Transmission Shafting for the Copter*, Harbin Engineering University, Harbin China, 2007, in Chinese.

[3] K. Waston, *Disconnect Coupling for Drivr Shafts*, Yeovil, England, United States Patent, 1976.

[4] N. F. Baldino, "Quick release disconnect coupling device for drive shaft segments," U.S. Patent, 1994.

[5] Y. Guo, S. Lambert, R. Wallen, R. Errichello, and J Keller, "Theoretical and experimental study on gear-coupling contact and loads considering misalignment, torque, and friction influences," *Mechanism and Machine Theory*, vol. 98, pp. 242–262, 2016.

[6] X. Yang and Y. Guan, "Overview of crown gear coupling design technologies," *Journal of Mechanical Transmission*, vol. 41, no. 12, pp. 165–170, 2017, in Chinese.

[7] E. Mucchi, G. Dalpiaz, and A. Rivola, "Elastodynamic analysis of a gear pump. part II: meshing phenomena and simulation results," *Mechanical Systems and Signal Processing*, vol. 24, no. 7, pp. 2180–2197, 2010.

[8] C. Y. Yi, "Analysis of the meshing of crown gear coupling," *Journal of Shanghai University (English Edition)*, vol. 9, no. 6, pp. 527–533, 2005.

[9] Z. Shi, Q. Xia, and D. Zhang, "Analysis of torsional vibration characteristic for the crown gear coupling of EMU," *Journal of Mechanical Transmission*, vol. 41, no. 08, in Chinese, 2017.

[10] W. Ernest, "Gear Coupling," US3292390A, 1966.

[11] L. Kelemen and J. Szente, "Two mathematical models for generation of crowned tooth surface," *The Scientific World Journal*, vol. 2014, Article ID 641091, 2014.

[12] J. Wei, *Study of the Crowning Gear Coupling Used on the High speed*, Southwest Jiaotong University, Chengdu China, 2015, in Chinese.

[13] V. Cuffaro, F. Curà, and A. Mura, "Experimental investigation about surface damage in straight and crowned misaligned splined couplings," *Engineering Materials*, vol. 577, pp. 353–356, 2014.

[14] Y. Guan, X. Yang, Z. Fang, and G Chen, "Comparative analysis of three geometric models for crown gear coupling," *Mechanism and Machine Theory*, vol. 136, pp. 269–283, 2019.
[15] Y. Wu, "Finite element analysis of crown gear coupling based on ansys," *Lifting the transport machinery*, no. 04, pp. 67–71, 2020, in Chinese.
[16] M. Alfares and A. Elkholy, "Load analysis of misaligned gear coupling using the clearance distribution of meshing teeth," *Transactions of the Canadian Society for Mechanical Engineering*, vol. 25, no. 1, pp. 13–28, 2001.
[17] F. Curà and A. Mura, "Theoretical and numerical evaluation of tilting moment in crowned teeth splined couplings," *Meccanica*, vol. 53, no. 1-2, pp. 413–424, 2018.
[18] H. Zhang and W. Zhong, "Parameterized modeling of crown gear coupling used in 350 km/h high speed EMUs based on APDL language in ANSYS," *Electric Drive for Locomotives*, no. 06, pp. 25–28, 2007, in Chinese.
[19] Q. Bi, *Contact Fea of Crown Gear Couplings in Stirring Machine*, Shanghai Jiao Tong University, Shanghai, China, 2009, in Chinese.
[20] General editorial committee of aero engine design manual, *Aero Engine Design Manual*, Aviation industry press, louisville Jefferson, 2000, in Chinese.
[21] C. Xie, R. Zhu, and M. Li, "Application of crown gear coupling to folding mechanism," *Machine Building and Automation*, vol. 49, no. 02, pp. 42–44, 2020, in Chinese.