Hindawi
Journal of Electrical and Computer Engineering
Volume 2024, Article ID 8922611, 5 pages
https://doi.org/10.1155/2024/8922611

Research Article

Pinched Hysteresis Loop with Nonlinear Electronic Components: From Memristor to Hysteristor Concepts

Leonardo Barboni

Department of Electronics, IIE-Fing-Udelar, Julio Herrera y Reissig 565, Montevideo CP11300, Uruguay

Correspondence should be addressed to Leonardo Barboni; lbarboni@fing.edu.uy

Received 29 November 2023; Revised 26 February 2024; Accepted 29 February 2024; Published 8 March 2024

Academic Editor: R. Palanisamy

A memristor is an electrical two-terminal passive device that exhibits a pinched hysteresis loop that always passes through the origin in the voltage-current plane. We found a system that also exhibits pinched hysteresis loop, which, consequently following the trend in the literature, can be called memristors; however, their dynamics do not match the equation of memristor that is widely spread and used in the literature. For this reason, in this work, we proposed the name of hysteristor of order n. It is a passive system with zero-crossing hysteresis loop in the V-I plane but not necessarily governed by the conventional equations of memristors. The system is proposed to provide a comprehensive circuit taxonomy. The concept of a hysteristor encapsulates and generalizes the idea of memristive systems. To validate the theory, we present theoretical analysis and representative simulations of a novel hysteristor of order 1.

1. Introduction

A memristor (with pinched hysteresis loop characteristic) is an electrical element conjectured to complete the lumped circuit theory in 1971 [1]. It is a two-terminal passive nonlinear resistance element that exhibits the well-known pinched hysteresis loop at the origin of the voltage-current plane when it is applied across it, any bipolar-periodic zero-mean excitatory voltage or current of any value. In 2008, Hewlett-Packard Co. reported the first implemented memristor built with titanium oxide. Controversy arose during that period and continued till date centered around whether a memristor could be considered a fundamental element or not. Despite the controversy surrounding the technological realization, research into the properties of the pinched hysteresis loop continued to grow. Irrespective of whether it is implemented by emulating its behavior through circuitry composed of other active or passive components, the research and articles continue generating and sustaining optimistic expectations in the scientific community about its usage and advantages. The popularity in research into pinched hysteresis loop is motivated by its promising potential for building novel integrated circuits and computing systems as for instance proposed in [2–5].

The main advantage of systems with pinched hysteresis loop lies in offering the capability for memory and time-varying processing information through nonlinear transformations in a unique passive system. The pinched hysteresis loop characteristic has started to receive formal treatment as research into its progress [6–9] and nowadays is defined as pinched hysteresis attractor. With the rising need for better understanding of pinched hysteresis attractor, researchers implement emulators through diodes and other passive elements. Such emulators enable the study (theoretically and numerically) of possible attractors and ways of implementing nonlinear transformations for novel computing paradigms. The first pinched hysteresis loop emulator was proposed in [10], based on a diode-bridge with a parallel $R-C$ filter as load. Other studies, such as [11–13], used pinched hysteresis loop emulators as part of other circuits for in-depth study of their bifurcations and chaotic behaviors.

In this work, we found a system that also exhibits pinched hysteresis loop, which, consequently following the trend in the literature, can be called memristors; however, their dynamics do not match the equation of memristor that is widely spread and used in the literature. To accommodate this gap in definitions and provide a comprehensive circuit taxonomy, we proposed a new definition: the current-controlled or voltage-controlled hysteristor of order n.

In Section 2, we define the memristor (with pinched hysteresis loop characteristic) according to terminology used in the literature. In Section 3, we touch upon the misconceptions and limitations associated with the definition of the memristor and consequently introduce the motivation for the core results and aim of this article in Section 4, showing the concept of the *hysteristor* element of order n. It provides a more comprehensive taxonomy and completeness of the theory and definition. Section 5 shows simulated results of a *hysteristor* emulator of order 1, and lastly, final conclusions are given in Section 6.

2. Definitions according to the State of the Art

According to [14], memristors exhibit three characteristics for any bipolar periodic signal excitation, including the following: (i) they show pinched hysteresis loop in the voltage-current plane, (ii) the area of the hysteresis loop decreases and shrinks to a single-valued V-I function as the signal excitation frequency tends to infinity, and (iii) the following equations apply:

(a) For a current-controlled memristive time-invariant system,

$$\begin{cases} V_m = R(\mathbf{x}, i_m) i_m \text{ and } R(\mathbf{x}, 0) \neq \infty, \quad \forall \mathbf{x}, \\ \dfrac{d\mathbf{x}}{dt} = f(\mathbf{x}, i_m) \ \mathbf{x} \text{ represents the innerstate variables.} \end{cases} \tag{1}$$

(b) For a voltage-controlled memristive time-invariant system,

$$\begin{cases} i_m = G(\mathbf{x}, V_m) V_m \text{ and } G(\mathbf{x}, 0) \neq \infty, \quad \forall \mathbf{x}, \\ \dfrac{d\mathbf{x}}{dt} = f(\mathbf{x}, V_m) \ \mathbf{x} \text{ represents the innerstate variables,} \end{cases} \tag{2}$$

where i_m is the current across the memristor and V_m is the voltage across the terminals, $R(\mathbf{x}, i_m)$ is bounded, and $f(\mathbf{x}, i_m)$ is the equation of state which must be also bounded to guarantee the existence of a solution $\mathbf{x}(t)$. The expression $V_m = R(\mathbf{x}, i_m) i_m$ (or $i_m = G(\mathbf{x}, V_m) V_m$) guarantees the zero-crossings at the origin of the $V - i$ plane for all amplitudes, frequencies, and initial states. The area of the lobes, shapes, and orientation of the hysteresis loop evolve with frequency. In particular, it is reported that the areas of lobes decrease (it shrinks or collapses) monotonically as the excitation i_m (or V_m) frequency increases. A concise concept was presented in [14].

3. Pinched Loops and Hysteristors

In our study of memristors and pinched hysteresis loop, we faced the following dilemma: on the one hand, (a) as seen from (1), the expression $V_m = R(\mathbf{x}, i_m) i_m$ shows the zero-crossing at the origin of the $V - i$ plane for all amplitudes which defines memristive dynamics. On other hand, (b) there is a school of thought or scientific tradition, supported by a lot of literature that generalizes the concept "*. . .Any 2-terminal device exhibiting a pinched hysteresis loop which always passes through the origin in the voltage-current plane when driven by any periodic input current source, or voltage source, with zero DC component is called a memristor. . ...*" (text from [14]). It is noteworthy this concept was found in all literature we surveyed. Therefore, the following question arises: could it be possible to have a 2-terminal passive device or system that exhibits pinched hysteresis loop (situation where unequivocally it suffices to define it as memristor in accordance with the literature), but without being governed by expression equations (1) and (2)? The surprising answer is yes. In fact, while we studied the properties of the circuit proposed in Figure 1, we had to construct a dedicated classification and framework to give an interpretation to the results obtained: it exhibits pinched hysteresis loop and cannot be classified as a memristor emulator in accordance with (1), neither as inverse-memristor as proposed in [15]. This ambiguity formed our motivation for this work, conjecturing the concept of *hysteristor* of order n. It is conceptualized as a two-terminal passive nonlinear dynamical system or device that exhibits hysteresis loops with zero-crossing at the origin in their current-voltage characteristics for all applied current or voltage amplitudes, frequencies, and initial states, but for which the system of equations (1) or (2) does not hold, but which are instead subject to the following system of equations:

(a) For a current-controlled *hysteristor* time-variant system,

$$\begin{cases} V_{hz} = H_z(\mathbf{Dx}, i_{hz}, t) \text{ and } H_z(\mathbf{Dx}, 0, t) = 0, \quad \forall \mathbf{x}, \forall t, \\ \dfrac{d\mathbf{x}}{dt} = f(\mathbf{Dx}, v_{hz}, i_{hz}, t) \ \mathbf{x} \text{ represents innerstate variables.} \end{cases} \tag{3}$$

(b) For a voltage-controlled *hysteristor* time-variant system,

$$\begin{cases} i_{hz} = G_z(\mathbf{Dx}, v_{hz}, t) \text{ and } G_z(\mathbf{Dx}, 0, t) = 0, \quad \forall \mathbf{x}, \forall t, \\ \dfrac{d\mathbf{x}}{dt} = f(\mathbf{Dx}, v_{hz}, i_{hz}, t) \ \mathbf{x} \text{ represents innerstate variables,} \end{cases} \tag{4}$$

where i_{hz} is the current across the *hysteristor* device and V_{hz} is the voltage across the terminals, $H_z(\mathbf{Dx}, i_{hz}, t)$ is bounded, and $f(.)$ is the system of

continuous multivariable functions of states, where **Dx** represents the derivatives up to order n, i.e., $\mathbf{Dx} = \{\mathbf{x}, \mathrm{d}\mathbf{x}/\mathrm{d}t, d^2\mathbf{x}/\mathrm{d}t^2 \cdots .., d^n\mathbf{x}/\mathrm{d}t^n\}$ (hysteristor of order n). In absence of the variable t (time), the *hysteristor* is said to be autonomous or time-invariant (readers can see in advance (18) as example of *hysteristor* of order $n = 1$).

The *hysteristor* model encapsulates and generalizes the concept of a memristor. Memristors belong to a subset of *hysteristor* for which their system of equations (equations (3) and (4)) can be expressed in the form of equations (1) and (2).

4. Current-Controlled *Hysteristor* Emulator

The first-ever circuit realization of a current-controlled *hysteristor* (of order $n = 1$) passive emulator is established in Figure 1. It uses two diodes, two resistances, and one inductor instead of diode bridge and inductors as seen in [13, 16] to emulate a memristor behavior.

We construct the equations of the proposed *hysteristor* by beginning with the diode equation without considering intrinsic parasitic and high-frequency effects that produce unwanted dynamic effects (interested readers can see in advance the final obtained equation (17) of the *hysteristor*); then:

$$\begin{aligned} i_{D_1} &= I_s\left(e^{2\alpha V_{D_1}} - 1\right), \quad \text{and} \\ i_{D_2} &= I_s\left(e^{2\alpha V_{D_2}} - 1\right), \end{aligned} \tag{5}$$

where $2\alpha = 1/nV_T$, I_s denotes the reverse saturation current, n is the emission coefficient, and V_T is the thermal voltage. According to the voltage drop,

$$\begin{aligned} V_{hz} &= Ri_1 + V_{D_1}, \quad \text{and} \\ V_{hz} &= Ri_2 - V_{D_2}, \end{aligned} \tag{6}$$

$$-V_L = V_{D_1} + V_{D_2}. \tag{7}$$

The *hysteristor* current i_{hz} corresponds to $i_{hz} = i_{D_1} - i_{D_2}$. Using equations (5) and (6), we achieve the following relation:

$$i_{hz} = I_s e^{\alpha\left(V_{D_1}+V_{D_2}\right)}\left(e^{\alpha\left(V_{D_1}-V_{D_2}\right)} - e^{-\alpha\left(V_{D_1}-V_{D_2}\right)}\right). \tag{8}$$

Using equation (7), it becomes convenient to express

$$i_{hz} = 2I_s e^{-\alpha V_L} \sinh\left(\alpha\left(V_{D_1} - V_{D_2}\right)\right). \tag{9}$$

However, from equation (6),

$$2V_{hz} = Ri_{hz} + V_{D_1} - V_{D_2}. \tag{10}$$

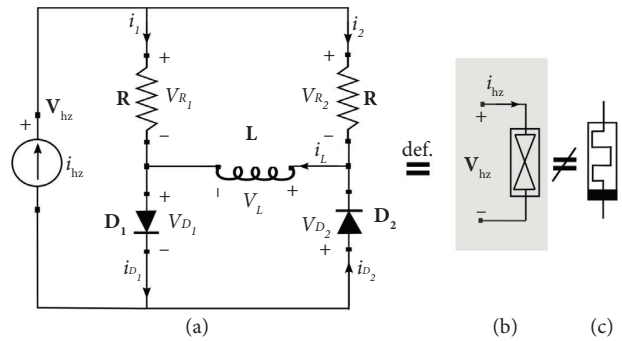

Figure 1: (a) Proposed current-controlled *hysteristor* circuit emulator, (b) generalized symbol of the proposed *hysteristor* element, and (c) memristor device generalized symbol.

Then, the $\{V_{hz} - i_{hz}\}$ relation is provided.

$$V_{hz} = \frac{1}{2}Ri_{hz} + \frac{1}{2\alpha}\sinh^{-1}\left(\frac{i_{hz}}{2I_s}e^{\alpha V_L}\right). \tag{11}$$

Next, we turn to the state equation. By taking $V_{hz} = V_{D_1} + V_L + Ri_2$ and $V_{hz} = -V_{D_2} - V_L + Ri_1$, we obtain

$$V_{D_1} + V_{D_2} + 2V_L + R\left(i_2 - i_1\right) = 0. \tag{12}$$

Since $i_2 - i_1 = i_2 - 2i_1 + i_1 = i_{hz} - 2i_1$ and $-V_L = V_{D_1} + V_{D_2}$, we hence achieve from equation (12) the following:

$$\begin{aligned} i_1 &= \frac{V_L}{2R} + \frac{i_{hz}}{2} \\ &= i_{D_1} - i_L \\ &= I_s\left(e^{2\alpha V_{D_1}} - 1\right) - i_L, \end{aligned} \tag{13}$$

$$\frac{V_L}{2R} + \frac{i_{hz}}{2} = I_s\left(e^{2\alpha V_{D_1}} - 1\right) - i_L. \tag{14}$$

To complete the equations, we have to calculate V_{D_1}. It is quite straightforward.

$$\begin{aligned} \frac{V_{hz} - V_{D_1}}{R} &= i_1 \\ &= \frac{V_L}{2R} + \frac{i_{hz}}{2} \Rightarrow V_{D_1} \\ &= V_{hz} - \frac{Ri_{hz}}{2} - \frac{V_L}{2}. \end{aligned} \tag{15}$$

Therefore, from equation (14),

$$\frac{V_L}{2R} + \frac{i_{hz}}{2} = I_s\left(e^{2\alpha V_{hz} - \alpha R i_{hz} - \alpha V_L} - 1\right) - i_L. \tag{16}$$

Finally, this *hysteristor* dynamic can be written as follows:

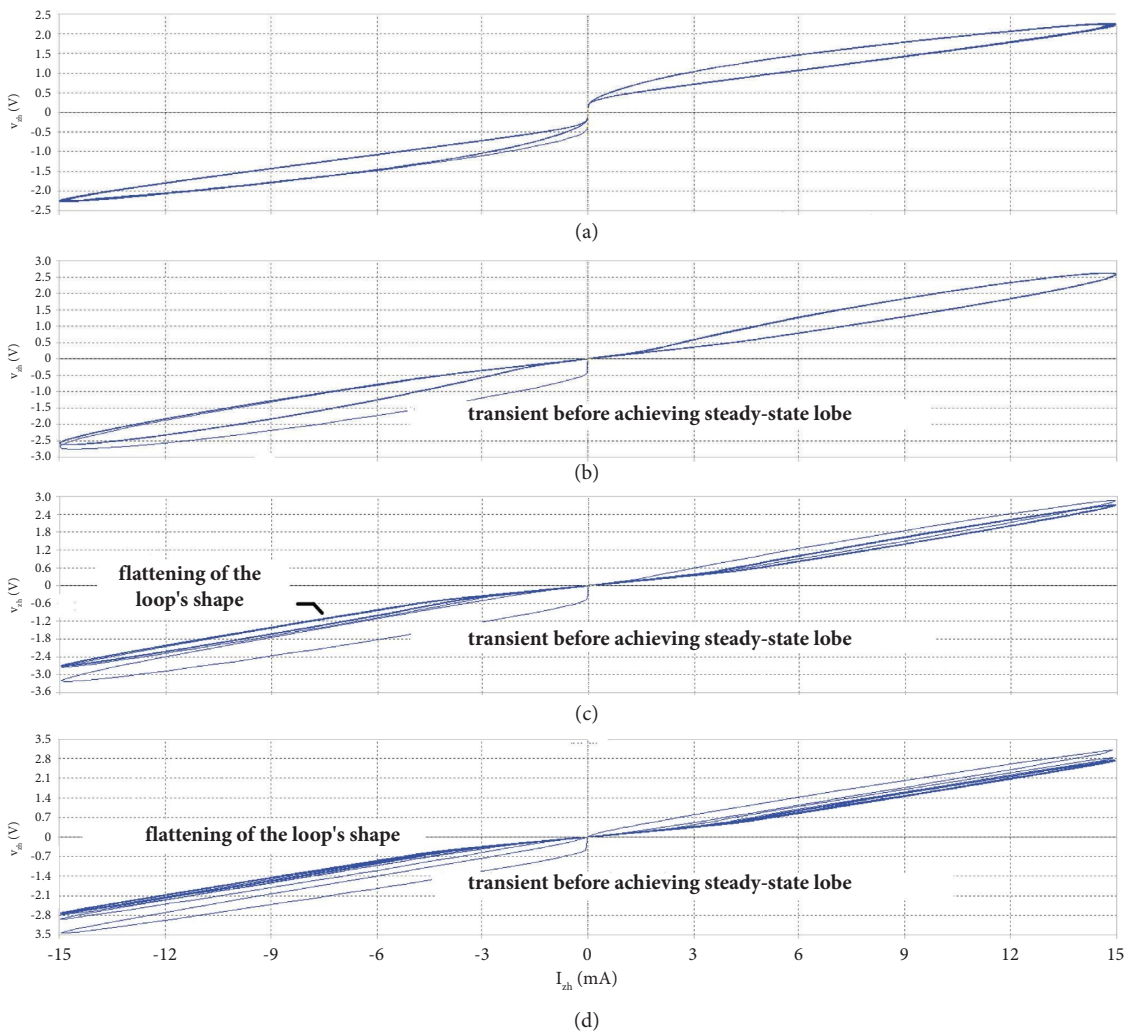

Figure 2: Simulated pinched hysteresis loop of the *hysteristor* emulator driven by a current source $i_{hz} = I_o \sin(2\pi f t)$ of constant amplitude $I_o = 15\text{mA}$ at different f values: (a) $f = 100\text{Hz}$, (b) $f = 500\text{Hz}$, (c) $f = 1500\text{Hz}$, and (d) $f = 3000\text{Hz}$.

$$\begin{cases} V_{hz} = \dfrac{1}{2}Ri_{hz} + \dfrac{1}{2\alpha}\sinh^{-1}\left(\dfrac{i_{hz}}{2I_s}e^{\alpha V_L}\right), \\ \dfrac{V_L}{2R} + \dfrac{i_{hz}}{2} = I_s\left(e^{2\alpha V_{hz} - \alpha R i_{hz} - \alpha V_L} - 1\right) - i_L, \\ V_L = L\dfrac{di_L}{dt}. \end{cases} \tag{17}$$

That can be expressed as

$$\begin{cases} V_{hz} = \dfrac{1}{2}Ri_{hz} + \dfrac{1}{2\alpha}\sinh^{-1}\left(\dfrac{i_{hz}}{2I_s}e^{\alpha L\left(di_L/dt\right)}\right), \\ \dfrac{di_L}{dt} = \dfrac{2RI_s}{L}\left(e^{2\alpha V_{hz} - \alpha R i_{hz} - \alpha L\left(di_L/dt\right)} - 1\right) - \dfrac{2Ri_L}{L} - \dfrac{Ri_{hz}}{L}. \end{cases} \tag{18}$$

In accordance with equation (1), i_L represents the inner state variable; however, it should be noted that the form $V_{hz} = R(V_c, i_{hz})i_{hz}$ is not accomplished (i.e. it does not contain i_{hz} proportionality), neither the state equation. Instead, equation (3) contains proportionality with $n = 1$. It is surprising that the proposed current-controlled *hysteristor* has pinched loop hysteresis (zero-crossing hysteresis loop) for any bipolar periodic signal excitation with zero DC component, without being a memristor as defined by equation (1), neither as in [15].

It suffices to prove that the well-accepted and widely used concept in the literature, for example, in [14] is a conjecture that leads to incorrect conclusions. We have demonstrated that there could be systems with pinched loop hysteresis that are not memristors in the sense of the equation (1) for any value of bipolar-periodic zero-mean excitatory currents. We define them as *hysteristor* and next we present some representative simulations to validate the theory.

5. Validation by Simulation

The following parameters were used for the simulation of the current-controlled *hysteristor of order* $n = 1$ circuit emulator proposed in Figure 1: $R = 200\,\Omega$, $L = 100\,mH$. The assigned diode was 1N4148 with PSpice-model card available from [17]. A state initial condition $i_L = 0$ was selected and the simulator used was LTspice [18]. For such diode models, the magnitudes of the circuit parameters as well as the values of the input signal amplitudes and frequencies are maintained similar so as to compare the lobe shapes obtained in other works such as [10, 13, 16, 19] as well as for ease of illustration (interested readers can verify that the simulated loops exhibit similar trajectories as shown in the cited literature). The current-voltage characteristics obtained from simulations are shown in Figure 2. The loci in the V-I plane have hysteresis loops pinched at zero and the hysteresis loop shrinks to a single-valued function as the frequency increases and the shape of the *hysteristor* depends on the circuit parameters. The transient behavior while reaching steady state is due to the inductor state. It quickly achieves its steady-state internal magnetic field.

6. Conclusion

We found a passive system with pinched hysteresis loop, which consequently could be named memristors; however, their dynamics do not match the equations of memristors widely spread and used in the literature. To accommodate this gap in definitions and provide a comprehensive circuit taxonomy, we proposed a new definition: the current-controlled or voltage-controlled *hysteristor* of order n. In this paper, the implemented current-controlled *hysteristor* of order $n = 1$ has a simple topology and comprises only one inductor, two diodes, and two resistances. Agreement between the theoretical proof and simulations results validates the existence of this kind of systems we refer to as *hysteristors*; memristors can be classified as a subset of *hysteristors*.

Data Availability

The data used to support the findings of this study are available from the corresponding author upon reasonable request.

Conflicts of Interest

The author declares that there are no conflicts of interest.

References

[1] L. O. Chua, "Memristor, the missing circuit element," *IEEE Transactions on Circuit Theory*, vol. 18, no. 5, pp. 507–519, 1971.

[2] P. Mazumder, S. M. Kang, and R. Waser, "Memristors: devices, models, and applications [scanning the issue]," *Proceedings of the IEEE*, vol. 100, no. 6, pp. 1911–1919, 2012.

[3] H. M. I. Selmy and A. Dessouki, "Low power memristor based voltage controlled oscillator for electrical neural stimulation," in *Proceedings of the In Advanced Control Circuits Systems (ACCS) Systems, Intl. Conf. on New Paradigms in Electronics and Information Technology*, PEIT, Alexandria, Egypt, November 2017.

[4] S. Liu, Y. Wang, M. Fardad, and P. K. Varshney, "A memristor-based optimization framework for artificial intelligence applications," *IEEE Circuits and Systems Magazine*, vol. 18, no. 1, pp. 29–44, 2018.

[5] L. Barboni, "A passive circuit-emulator for a current-controlled memristor," 2020, https://arxiv.org/abs/2008.08925.

[6] S. Majzoub, A. Elwakil, C. Psychalinos, and B. Maundy, "On the mechanism of creating pinched hysteresis loops using a commercial memristor device," *AEU International Journal of Electronics and Communications*, vol. 111, Article ID 152923, 2019.

[7] A. Elwakil, M. E. Fouda, S. Majzoub, and A. Radwan, "Pinched hysteresis loops in non-linear resonators," *IET Circuits, Devices and Systems*, vol. 15, no. 2, pp. 88–93, 2020.

[8] B. Maundy, A. Elwakil, and C. Psychalinos, "Correlation between the theory of lissajous figures and the generation of pinched hysteresis loops in nonlinear circuits," *IEEE Transactions on Circuits and Systems I: Regular Papers*, vol. 66, no. 7, pp. 2606–2614, 2019.

[9] M. Fouda, A. Elwakil, and A. Radwan, "Pinched hysteresis with inverse-memristor frequency characteristics in some nonlinear circuit elements," *Microelectronics Journal*, vol. 46, no. 9, pp. 834–838, 2015.

[10] F. Corinto and A. Ascoli, "Memristive diode bridge with LCR filter," *Electronics Letters*, vol. 48, no. 14, pp. 824-825, 2012.

[11] Q. Xu, N. Wang, B. Bao, M. Chenand, and C. Li, "A feasible memristive chua circuit via bridging a generalized memristor," *Journal of Applied Analysis and Computation*, vol. 6, no. 4, pp. 1152–1163, 2015.

[12] Z. Njitacke, J. kengne, H. Fotsin, A. N. Negou, and D. Tchiotsop, "Coexistence of multiple attractors and crisis route to chaos in a novel memristive diode bidge-based jerk circuit," *Chaos, Solitons & Fractals*, vol. 91, pp. 180–197, 2016.

[13] Q. Xu, Q. Zhang, N. Wang, H. Wu, and B. Bao, "An improved memristive diode bridge-based band pass filter chaotic circuit," *Mathematical Problems in Engineering*, vol. 2017, pp. 1–11, 2017.

[14] L. Chua, "Everything you wish to know about memristors but are afraid to ask," *Radioengineering*, vol. 24, no. 2, pp. 319–368, 2015.

[15] D. Biolek, Z. Biolek, V. Biolkova, A. Ascoli, and R. Tetzlaff, "About v-i pinched hysteresis of some non-memristive systems," *Mathematical Problems in Engineering*, vol. 2018, pp. 1–10, 2018.

[16] B. Bao, P. Y. Wu, H. Bao, H. Wu, X. Zhang, and M. Chen, "Symmetric periodic bursting behavior and bifurcation mechanism in a third-order memristive diode bridge-based oscillator," *Chaos, Solitons & Fractals*, vol. 109, pp. 146–153, 2018.

[17] Ltwiki, "Standard.dio," 2019, http://ltwiki.org/index.php?title=Standard.dio.

[18] A. Devices, "Spice simulation software," https://www.analog.com/en/design-center/design-tools-and-calculators/ltspice-simulator.html.

[19] M. Chen, J. Yu, Q. Yu, C. Li, and B. Bao, "A memristive diode bridge-based canonical chua's circuit," *Entropy*, vol. 16, no. 12, pp. 6464–6476, 2014.