Hindawi Publishing Corporation
Journal of Robotics
Volume 2009, Article ID 892801, 16 pages
doi:10.1155/2009/892801

Research Article

A Riemannian-Geometry Approach for Modeling and Control of Dynamics of Object Manipulation under Constraints

Suguru Arimoto,[1,2] Morio Yoshida,[2] Masahiro Sekimoto,[1] and Kenji Tahara[3]

[1] *Research Organization of Science and Engineering, Ritsumeikan University, Kusatsu, Shiga 525 8577, Japan*
[2] *RIKEN-TRI Collaboration Center for Human-Interactive Robot Research, Nagoya, Aichi 463 0003, Japan*
[3] *Organization for the Promotion of Advanced Research, Kyushu University, Fukuoka 819 0395, Japan*

Correspondence should be addressed to Suguru Arimoto, arimoto@fc.ritsumei.ac.jp

Received 27 October 2008; Accepted 27 January 2009

Recommended by Heinz Wörn

A Riemannian-geometry approach for modeling and control of dynamics of object manipulation under holonomic or nonholonomic constraints is presented. First, position/force hybrid control of an endeffector of a multijoint redundant (or nonredundant) robot under a holonomic constraint is reinterpreted in terms of "submersion" in Riemannian geometry. A force control signal constructed in the image space of the constraint gradient is regarded as a lifting (or pressing) in the direction orthogonal to the kernel space. By means of the Riemannian distance on the constraint submanifold, stability of position control under holonomic constraints is discussed. Second, modeling and control of two-dimensional object grasping by a pair of multijoint robot fingers are challenged, when the object is of arbitrary shape. It is shown that rolling contact constraints induce the Euler equation of motion, in which constraint forces appear as wrench vectors affecting the object. The Riemannian metric is introduced on a constraint submanifold characterized with arclength parameters. An explicit form of the quotient dynamics is expressed in the kernel space with accompaniment of a pair of first-order differential equations concerning the arclength parameters. An extension of Dirichlet-Lagrange's stability theorem to redundant systems under constraints is suggested by introducing a Morse-Lyapunov function.

1. Introduction

Among roboticsists, it is implicitly known that robot motions can be interpreted in terms of orbits on a high-dimensional torus or trajectories in an n-dimensional configuration space. Planning of robot motions has been investigated traditionally on the basis of kinematics on a configuration space as an n-dim numerical space $\mathbf{R}^n$ [1].

This paper first emphasizes a mathematical observation that, given a robot as a multibody mechanism with n degrees of freedom whose endpoint is free, the set of all its postures can be regarded as a Riemannian manifold (M, g) associated with the Riemannian metric g that constitutes the robot inertia matrix. A geodesic connecting any two postures can correspond to an orbit expressed on a local coordinate chart and generated by a solution to the Euler-Lagrange equation of robot motion that originates only from the force of inertia [2, 3]. It should be emphasized that once the Riemannian manifold is given corresponding to the n degrees of freedom robot, the collection of all the geodesic paths describes the "law of inertia" for the manifold. It is also important to note that geodesic paths are invariant under any choice of local coordinates. This Riemannian geometry viewpoint is extended in this paper to an important class of multibody dynamics physically interacting with an object or with environment through holonomic or/and nonholonomic (but Pfaffian) constraints. Holonomic constraints are defined as a set of infinitely differentiable functions from a product manifold of multibody Riemannian manifolds onto an open set of a 2- or 3-dimensional Euclidean space called the task space. Such a mapping can be treated as a submersion from the product Riemannian manifold to $m(=$ 2- or 3-) dimensional Euclidean space. Hence, holonomic constraints induce a Riemannian submanifold with a naturally induced metric. An Euler-Lagrange equation is formulated in an implicit function form under such constraints. It is also

shown that if the gravity term can be explicitly compensated and there arises no viscous friction then the geodesic motion is invariant, that is, it is governed by the "law of inertia," under any adequate lifting (or pressing) through the joint torque injection in the direction along the constraint gradient. An explicit form of the Euler equation whose solution corresponds to a geodesic on the submanifold is given also as a quotient dynamics corresponding to the kernel space as an orthogonal compliment to the image space spanned from all the constraint gradients. Based upon these observations, the well-known methodology of hybrid (position/force) control for a robot whose end effector is constrained on a surface is re-examined and shown to be effective even if the robot is of redundancy in its degrees of freedom.

In a latter part of the paper, modeling of dynamics of grasping and manipulation of a two-dimensional rigid object with arbitrary shape by using a pair of multijoint robot fingers with spherical finger ends is challenged. It is shown that rolling contact constraints between finger ends and the object surfaces induce not only two holonomic constraints but also two nonholonomic constraints that restrict tangent vectors on the original Riemannian manifold that is a product of three manifolds expressing a set of whole postures of the two fingers and the object. An Euler-Lagrange equation for expressing the dynamics of such physical interaction is derived through applying the variational principle together with deriving a set of the first-order differential equations expressing the contact positions of the object with both the finger ends. The Riemannian distance is introduced on the kernel space as an orthogonal compliment to the image space of all the gradients vectors of both contact and rolling constraints. In other words, rolling constraints are expressed in terms of the first fundamental forms of given contours of the object and restrict only the tangent vector fields at both the contact points. An explicit Euler-Lagrange equation corresponding to a path on the constraint submanifold is derived together with a set of the first-order differential equations expressed in terms of the second fundamental forms of the object contours. Thus, it is shown that rolling constraints can be characterized by means of arc length parameters of the object contours that express locations of the contact points and in the sequel are integrable in the sense of Frobenius. A coordinated control signal called "blind grasping" without referring to the object kinematics or external sensing is proposed and shown to be effective in realizing stable grasping in the sense of stability on a submanifold. A sketch of the convergence proof is given on the basis of an extension of the Dirichlet-Lagrange theorem to a system of degrees of freedom redundancy by finding a Morse-Lyapunov function and using its physical properties and mathematical meanings.

2. Riemannian Manifold: A Set of All Postures

Lagrange's equation of motion of a multijoint system with 2 degrees of freedom (DOF) shown in Figure 1 is described by

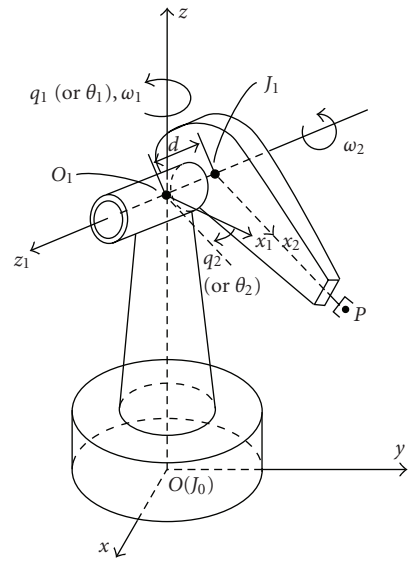

Figure 1: A 2-DOF part of vertically revolute robot PUMA-560.

the formula

$$H(q)\ddot{q} + \left\{\frac{1}{2}\dot{H}(q) + S(q,\dot{q})\right\}\dot{q} + g(q) = u, \tag{1}$$

where $q = (q_1, q_2)^T$ denotes the vector of joint angles, $H(q)$ denotes the inertia matrix, $S(q,\dot{q})\dot{q}$ the gyroscopic force term including centrifugal and Coriolis forces, $g(q)$ the gradient vector of a potential function $P(q)$ due to the gravity with respect to q, and u the joint torque generated by joint actuators [4]. It is well known that the inertia matrix $H(q)$ is symmetric and positive definite, and there exist a positive constant h_m together with a positive definite constant diagonal matrix H_0 such that

$$h_m H_0 \le H(q) \le H_0 \tag{2}$$

for any q. It should be also noted that $S(q,\dot{q})$ is skew symmetric and linear and homogeneous in $\dot{q}$. More in detail, the ijth entry of $S(q,\dot{q})$ denoted by s_{ij} can be described in the form [3]

$$s_{ij} = \frac{1}{2}\left\{\frac{\partial}{\partial q_j}\left(\sum_{k=1}^{n}\dot{q}_k h_{ik}\right) - \frac{\partial}{\partial q_i}\left(\sum_{k=1}^{n}\dot{q}_k h_{jk}\right)\right\}, \tag{3}$$

where $H(q) = (h_{ij}(q))$, from which it follows apparently that $s_{ij} = -s_{ji}$. Since we assume that the objective system to be controlled is a series of rigid links serially connected through each rotational joint with single DOF, every entry of $H(q)$ is a constant or a sinusoidal function of components of joint angle vector q. That is, each element of $H(q)$ and $g(q)$ is differentiable of class C^∞ (infinitely differentiable in q).

When two joint angles θ_1 and θ_2 are given in $\theta_i \in (-\pi, \pi]$, $i = 1, 2$, for the 2 DOF robot arm shown in Figure 1, the posture $p(\theta_1, \theta_2)$ is determined naturally. Denote the set of all such possible postures by M and introduce a family of subsets of M such that, for any $p \in M$ with joint angles

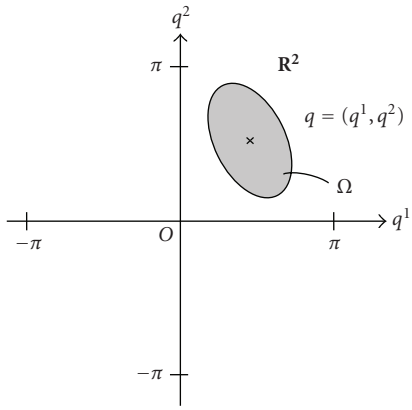

Figure 2: A homeomorphism $\phi : U \to \Omega$ is called a chart.

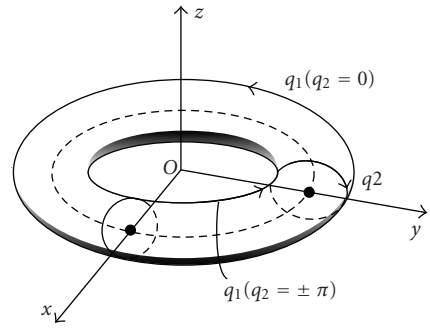

Figure 3: A two-dimensional torus is expressed by $T^2 = S^1 \times S^1$.

$p = (\theta_1, \theta_2)$ and any number $\alpha > 0$, a set of all $p' = (\theta_1', \theta_2')$ is defined as

$$U_{p,\alpha} = \{p' : ||p' - p||_H < \alpha\}, \tag{4}$$

where

$$||p' - p||_H = \sqrt{\sum_{i,j} h_{ij}(p)(\theta_i' - \theta_i)(\theta_j' - \theta_j)} \tag{5}$$

can be regarded as an open subset of M. Then, the set M with such a family of open subsets can be regarded as a topological manifold. It is possible to show that the manifold M becomes Hausdorff and compact. Further, every point p of M has a neighborhood U that is homeomorphic to an open subset Ω of 2-dimensional numerical space $\mathbf{R}^2$. Such a homeomorphism $\phi : U \to \Omega$ is called a coordinate chart. In fact, a neighborhood $U_{p,\alpha}$ of posture p with joint angles (θ_1, θ_2) in Figure 1 can be mapped to an open set Ω in $\mathbf{R}^2$ with 2 dimensional numerical coordinates (q^1, q^2) with the origin O (Figure 2). In this case, it is possible to see that the original set M of robot postures can be visualized as a torus shown in $\mathbf{R}^3$ (see Figure 3) in which angles q_1 and q_2 are defined. It is quite fortunate to see that, in the case of typical robots like the one shown in Figure 1, the local coordinates $(q^1, \ldots, q^n)$ can be identically chosen as a set of n independent joint angles $(\theta_1, \ldots, \theta_n)$ by setting $q^i = \theta_i$ $(i = 1, \ldots, n)$. It is also interesting to see that the torus in Figure 3 is made to be topologically coincident with the set of all arm endpoints $P = (x, y, z)$. As discussed in detail in mathematical text books [5, 6], the topological manifold (M, p) of such a torus can be regarded as a differentiable manifold of class C^∞.

Now, it is necessary to define a tangent vector to an abstract differentiable manifold M at $p \in M$. Let I be an interval $(-\epsilon, \epsilon)$ and define a curve $c(t)$ by a mapping $c : I \to M$ such that $c(0) = p$. A tangent vector to M at p is an equivalence class of curves $c : I \to M$ for the equivalence relation $\sim$ defined by

$c \sim \bar{c}$ if and only if, in a coordinate chart (U, ϕ) around p, we have $(\phi \circ \bar{c})'(0) = (\phi \circ c)'(0)$,

where symbol $()'$ means differentiation of $()$ with respect to $t \in I$. This definition of tangent vectors to M at p does not depend on choice of the coordinate chart at p, as discussed in text books [5, 6]. Let us denote the set of all tangent vectors to M at p by T_pM and call it the tangent space at $p \in M$. It has an n-dimensional linear space structure like $\mathbf{R}^n$. We also denote the disjoint union of the tangent spaces to M at all the points of M by TM and call it the tangent bundle of M.

Now, we are in a position to define a Riemannian metric on a differentiable manifold (M, p) as a mapping $g_p : T_pM \times T_pM \to \mathbf{R}$ such that $p \to g_p$ is of class C^∞ and $g_p(u, v)$ for $u \in T_pM$ and $v \in T_pM$ is a symmetric positive definite quadratic form

$$g_p(u, v) = \sum_{i,j=1}^{n} g_{ij}(p) u^i v^j. \tag{6}$$

Suppose that M is a connected Riemannian manifold. If $c : I[a, b] \to M$ is a curve segment of class C^∞, we define the length of c to be

$$\begin{aligned} L(c) &= \int_a^b ||\dot{c}(t)|| \mathrm{d}t \\ &= \int_a^b \sqrt{g_{c(t)}(\dot{c}(t), \dot{c}(t))} \mathrm{d}t, \end{aligned} \tag{7}$$

where we assume $\dot{c}(t) \neq 0$ for any $t \in I$ and call such a curve segment to be regular. A mapping of class $C^\infty c : [a, b] \to M$ is called a piecewise regular curve segment (for brevity, we call it an admissible curve) if there exists a finite subdivision $a = a_0 < a_1 < \cdots < a_k = b$ such that $c(t)$ for $t \in [a_{i-1}, a_i]$ is a regular curve for $i = 1, \ldots, k$. Then, it is possible to define for any pair of points $p, p' \in M$ the Riemannian distance $d(p, p')$ to be the infimum of all admissible curves from p to p'. It is well known [4, 5] that, with the distance function d defined above, any connected Riemannian manifold becomes a metric space whose induced topology is coincident with the given manifold topology. An admissible curve c in a Riemannian manifold is said to be minimizing if $L(c) \leq L(\tilde{c})$ for any other admissible curve $\tilde{c}$ with the same endpoints. It follows immediately from the definition of distance that c is minimizing if and only if $L(c)$ is equal to the distance between its endpoints. Further, it is known that if the Riemannian manifold $\{M, g\}$ is complete, then for any pair of points p and p' there exists at least a minimizing curve $c(t)$, $t \in [a, b]$,

with $c(a) = p$ and $c(b) = p'$. If such a minimizing curve $c(t)$ is described with the aid of coordinate chart (U, ϕ) as $\phi(c(t)) = (q^1(t), \ldots, q^n(t))$, then $q(t) = \phi(c(t))$ satisfies the 2nd-order differential equation

$$\frac{\mathrm{d}^2}{\mathrm{d}t^2} q^k(t) + \sum_{i,j=1}^{n} \Gamma_{ij}^k(c(t)) \frac{\mathrm{d}q^i(t)}{\mathrm{d}t} \frac{\mathrm{d}q^j(t)}{\mathrm{d}t} = 0, \quad (k = 1, \ldots, n), \tag{8}$$

where Γ_{ij}^k denotes Christoffel's symbol defined by

$$\Gamma_{ij}^k = \frac{1}{2} \sum_{h=1}^{n} g^{kh} \left(\frac{\partial g_{ih}}{\partial q^j} + \frac{\partial g_{jh}}{\partial q^i} - \frac{\partial g_{ij}}{\partial q^h} \right), \tag{9}$$

and (g^{kh}) denotes the inverse of matrix (g_{kh}). A curve $q(t) : I \to U$ satisfying (8) together with $\phi^{-1}(q(t))$ is called a geodesic, and (8) itself is called the Euler-Lagrange equation or the geodesic equation.

Given a C^∞-class curve $c(t) = I[a, b] \to M$, the quantity

$$\begin{aligned} E(c) &= \frac{1}{2} \int_a^b \|\dot{c}(t)\|^2 \mathrm{d}t \\ &= \frac{1}{2} \int_a^b g_{c(t)}(\dot{c}(t), \dot{c}(t)) \mathrm{d}t \end{aligned} \tag{10}$$

is called the energy of the curve. Then, by applying the Cauchy-Schwartz inequality for (7), we have

$$L(c)^2 \leq 2(b - a) E(c). \tag{11}$$

Further, the equality of (11) follows if and only if $\|\dot{c}(t)\|$ is constant. It is also possible to see that if $c(t)$ is a geodesic with $c(a) = p$ and $c(b) = p'$, then for any other curve $\bar{c}(t)$ with the same endpoints, it holds

$$E(c) = \frac{L(c)^2}{2(b - a)} \leq \frac{L(\bar{c})^2}{2(b - a)} \leq E(\bar{c}). \tag{12}$$

The equalities hold if and only if $\bar{c}(t)$ is also a geodesic. Conversely, if $c(t)$ with $c(a) = p$ and $c(b) = p'$ is a C^∞ curve that minimizes the energy and makes $g_{c(t)}(\dot{c}(t), \dot{c}(t))$ constant, then $c(t)$ becomes a geodesic connecting $c(a) = p$ and $c(b) = p'$. In mechanics, $E(c)$ is usually called "action of c," and $c(t)$ is considered as the orbit of motion of a multibody system.

3. Riemannian Geometry of Robot Dynamics

Dynamics of a robotic mechanism with n rigid bodies connected in series through rotational joints are described by Lagrange's equation of motion, as shown in (1). It is implicitly assumed that the axis of rotation of the first body is fixed in an inertial frame and denoted by z-axis that is perpendicular to the xy-plane as shown in Figure 1. If there is no gravity force affecting motion of the robot, then the equation of motion of the robot can be described by the form

$$H(q)\ddot{q} + \left\{ \frac{1}{2} \dot{H}(q) + S(q, \dot{q}) \right\} \dot{q} = u, \tag{13}$$

where u stands for a vector of control torques emanating from joint actuators. This formula is valid for motions of a revolute joint robot, shown in Figure 1, if it is installed in weightless environment like an artificial satellite, or the gravity term $g(q)$ (included in (1)) can be compensated by joint actuators through control input u. In general, we can represent a posture p of the robot as a physical entity by a family of joint angles θ_i $(i = 1, \ldots, n)$, which can be expressed by a point $\Theta = (\theta_1, \ldots, \theta_n)$ in the n-dimensional numerical space $\mathbf{R}^n$. In fact, we can naturally imagine an isomorphism $\phi : U \to \Omega$, where $U \subset M$, and Ω is an open subset of $\mathbf{R}^n$. In other words, a local coordinate chart $\phi(U)(= \Omega)$ can be treated to be identical to U itself, an open subset of M, by regarding $q = (q^1, \ldots, q^n)^T$ ("T" denotes transpose and hence q a column vector) identical to Θ by setting $q^i = \theta_i$ $(i = 1, \ldots, n)$. In this way, the abstract manifold M as the set of all robot postures can be regarded as an n-dimensional torus T^n as an n-tuple direct product of $S^1 : T^n = S^1 \times \cdots \times S^1$. Hence, a robot posture $p \in M$ can be represented by a point Θ on T^n and also expressed by a joint vector q in $\mathbf{R}^n$.

From the definition of inertia matrices, $H(q)$ is symmetric and positive definite, and the kinetic energy is expressed as a quadratic form

$$K(q, \dot{q}) = \frac{1}{2} \dot{q}^T H(q) \dot{q}. \tag{14}$$

Hence, the equation of motion of the robot is expressed by Lagrange's equation

$$\frac{\mathrm{d}}{\mathrm{d}t} \left\{ \frac{\partial}{\partial \dot{q}} L(q, \dot{q}) \right\} - \frac{\partial}{\partial q} L(q, \dot{q}) = u, \tag{15}$$

where $L(q, \dot{q}) = K(q, \dot{q})$, and u stands for a generalized external force vector. It is interesting to note that in differential geometry, (15) can be described as

$$\sum_i h_{ki} \ddot{q}^i + \sum_{i,j} \Gamma_{ikj}(q) \dot{q}^i \dot{q}^j = u^k, \tag{16}$$

where Γ_{ikj} denotes Christoffel's symbol of the first kind defined by

$$\Gamma_{ikj} = \frac{1}{2} \left(\frac{\partial h_{jk}}{\partial q^i} + \frac{\partial h_{ik}}{\partial q^j} - \frac{\partial h_{ij}}{\partial q^k} \right). \tag{17}$$

For later use, we introduce another Christoffel's symbol called the second kind as shown in the formula

$$\begin{aligned} \Gamma_{ij}^k &= \frac{1}{2} \sum_{l=1}^{n} h^{lk} \left(\frac{\partial h_{jl}}{\partial q^i} + \frac{\partial h_{il}}{\partial q^j} - \frac{\partial h_{ij}}{\partial q^l} \right) \\ &= \frac{1}{2} \sum_{l=1}^{n} h^{lk} \Gamma_{ilj}, \end{aligned} \tag{18}$$

where (h^{lk}) denotes the inverse of (h_{lk}), the inertia matrix $H(q) = (h_{lk})$. Since (h_{kl}) and (h^{kl}) are symmetric, it follows that $\Gamma_{ikj} = \Gamma_{jki}$ and $\Gamma_{ij}^k = \Gamma_{ji}^k$. Now, we show that (13) is equivalent to (16) by bearing in mind that

$\dot{H}(q) = \sum_i \{\partial H(q)/\partial q^i\}\dot{q}^i$, and the skew symmetric matrix $S(q,\dot{q})$ is expressed as in (3). In fact, the second term in the bracket () of (17) corresponds to the first term in {} of (3) and the third term of (17) does to the second term in {} of (3). Hence, it follows from (3) that

$$\begin{aligned}\sum_{j=1}^{n} s_{kj}\dot{q}^j &= \sum_{j=1}^{n}\frac{1}{2}\left[\left\{\frac{\partial}{\partial q^j}\left(\sum_{i=1}^{n}\dot{q}^i h_{ki}\right)\right\}\dot{q}^i\right.\\ &\qquad\left.-\left\{\frac{\partial}{\partial q^k}\left(\sum_{i=1}^{n}\dot{q}^i h_{ij}\right)\right\}\dot{q}^j\right] \qquad (19)\\ &= \sum_{j=1}^{n}\sum_{i=1}^{n}\frac{1}{2}\left\{\left(\frac{\partial h_{ik}}{\partial q^j}-\frac{\partial h_{ij}}{\partial q^k}\right)\right\}\dot{q}^i\dot{q}^j.\end{aligned}$$

Substituting this into (16) by comparing the last two terms of (17) with the last bracket {} of (19) results in the equivalence of (13) to (16). It is easy to see that multiplication of (16) by $H^{-1}(q)$ yields

$$\ddot{q}^k + \sum_{i,j}\Gamma_{ij}^k\dot{q}^i\dot{q}^j = \sum_j h^{kj}u^j, \quad k = 1,\ldots,n. \qquad (20)$$

If $u = 0$, this expression is nothing, but the Euler-Lagrange equation shown in (8). By this reason, from now on, we use symbol $g_{ij}(q)$ instead of $h_{ij}(q)$ for the inertia matrix $H(q)$ even when robot dynamics are treated.

Now, on the abstract topological manifold M as a set of all possible postures of a robot, suppose that a Riemannian metric is given by a scalar product on each tangent space T_pM:

$$\langle v, w\rangle = g_{ij}(p)v^i w^j, \qquad (21)$$

where $v = v^i(\partial/\partial q^i) \in T_pM$ and $w = w^j(\partial/\partial q^j) \in T_pM$, and the summation symbol $\sum$ in i and j is omitted, and $q = (q^1,\ldots,q^n)$ represents local coordinates. Then, the manifold (M,p) can be regarded as a Riemannian manifold and becomes complete as a metric space. Then, according to the Hopf-Rinow theorem [5], any two points $p,q \in M$ can be joined by a geodesic of length $d(p,q)$, that is, a curve satisfying (8) with shortest length, where

$$\begin{aligned}d(p,q) &= \inf\int_a^b \|\dot{c}(t)\|\mathrm{d}t\\ &= \inf\int_a^b \sqrt{\langle\dot{c}(t),\dot{c}(t)\rangle}\,\mathrm{d}t\end{aligned} \qquad (22)$$

with $c(a) = p$ and $c(b) = q$.

As discussed in the previous section, geodesics are the critical points of the energy functional $E(c)$. Further, a geodesic curve $c(t)$ satisfies $\|\dot{c}(t)\| = \text{const.}$ In fact, by regarding $c(t) = q(t)$ that is an orbit on Ω, we have

$$\begin{aligned}\frac{\mathrm{d}}{\mathrm{d}t}\langle\dot{q},\dot{q}\rangle &= \frac{\mathrm{d}}{\mathrm{d}t}(g_{ij}(q(t))\dot{q}^i(t)\dot{q}^j(t))\\ &= \frac{\mathrm{d}}{\mathrm{d}t}\{\dot{q}^T(t)G(q(t))\dot{q}(t)\}\\ &= \ddot{q}^T(t)G(q)\dot{q}(t) + \dot{q}^T(t)\dot{G}(q)\dot{q}(t) + \dot{q}^T(t)G(q)\ddot{q}(t)\\ &= 0,\end{aligned} \qquad (23)$$

where the equivalent expression

$$G(q)\ddot{q} + \left\{\frac{1}{2}\dot{G}(q) + S(q,\dot{q})\right\}\dot{q} = 0 \qquad (24)$$

to (13) with $u = 0$ is used, $G(q) = (g_{ij}(q))$, and s_{ij} of S is given in the form of (3) (where $h_{ij} = g_{ij}$). It is also important to note that, on a local coordinate chart $\Omega \subset \mathbf{R}^n$ corresponding to a neighborhood U of $p \in M$, an orbit $q(t)$ parameterized by time $t \in [a,b]$ and expressed by a solution to (20) (where u^j is of C^∞ in t) should satisfy

$$\sum_{j=1}^{n}\dot{q}^j(t)u^j(t) = \frac{\mathrm{d}}{\mathrm{d}t}E(q(t)), \qquad (25)$$

or

$$\int_a^b\sum_{j=1}^{n}\dot{q}^j(t)u^j(t)\mathrm{d}t = E(q(b)) - E(q(a)), \qquad (26)$$

as long as $q(t) \in \Omega$, where $E(q(t)) = (1/2)\langle\dot{q}(t),\dot{q}(t)\rangle$. When $u(t) = 0$, $E(q(t)) = \text{const.}$ and then the curve connecting $p = \phi^{-1}(q(a))$ and $p' = \phi^{-1}(q(b))$ must be a geodesic. In other words, an inertia-originated movement without being affected by the gravitational field or any external force field produces a geodesic orbit [2]. The most importantly, geodesics together with their length are invariant under any choice of local coordinates.

Before closing this expository section on robot motion from the Riemannian geometry viewpoint, we must emphasize that all the above invariant properties of geodesics of inertia-originated robot motions result from imaging a set of all robot postures as an abstract Riemannian manifold. Choice of a local coordinates is originally arbitrary. Even an n-dimensional torus T^n is one of such choice of local coordinates corresponding to the choice of joint angles $q = (q^1,\ldots,q^n)^T$. At the same time, it is important to note that, in differential geometry, choice of coordinates in the tangent space T_pM is indeterminable or free to choose. However, once a local coordinates system for an n degrees of freedom robot is chosen by joint angle vector $q = (q^1,\ldots,q^n)^T$, then the coordinates in the tangent space T_pM should be chosen as the vector of joint angular velocities $\partial/\partial q = (\partial/\partial q^1,\ldots,\partial/\partial q^n)$ correspondingly to $\dot{q} = (\dot{q}_1,\ldots,\dot{q}_n)^T$, from which the Riemannian metric $g_{ij}(q)$ is defined through the inertia matrix.

4. Constraint Submanifold and Hybrid Position/Force Control

Consider an n-DOF robotic arm whose last link is a pencil and suppose that the endpoint of the pencil is in contact with a flat surface $\varphi(\mathbf{x}) = \xi$, where $\mathbf{x} = (x,y,z)^T$. It is well known that the Lagrange equation of motion of the system is written as

$$G(q)\ddot{q} + \left\{\frac{1}{2}\dot{G} + S\right\}\dot{q} + g(q) = -\lambda\frac{\partial\varphi(\mathbf{x}(q))}{\partial q} + u, \qquad (27)$$

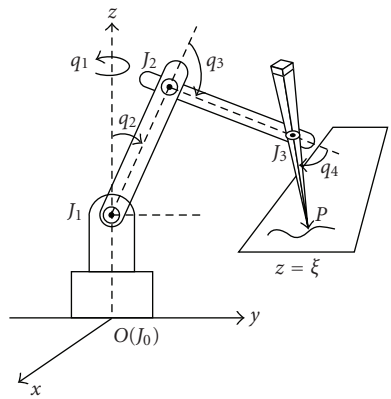

Figure 4: A hand-writing robot with four DOFs whose endpoint $P(=(x,y))$ is constrained on a plane $z=\xi$.

where $\partial\varphi/\partial q$ can be decomposed into $\partial\varphi(q)/\partial q = J^T(q)\partial\varphi/\partial\mathbf{x}$ and $J(q) = \partial\mathbf{x}/\partial q^T$. On the constraint manifold $F_\xi = \{p : p \in M \text{ and } \varphi(\mathbf{x}(p)) = \xi\}$, let us consider a smooth curve $c(t) : I[a,b] \to F_\xi$ that connects the given two points $c(a) = p$ and $c(b) = p'$, where p and p' belong to F_ξ. The length of such a curve constrained to F_ξ is defined as

$$L(c) = \int_a^b \sqrt{g_{ij}(c(t))\dot{c}^i(t)\dot{c}^j(t)}\,\mathrm{d}t, \tag{28}$$

and consider the minimization

$$d(p,p') = \inf_{c\in F_\xi} L(c) \tag{29}$$

that should be called the distance between p and p' on the constraint manifold. Then, the minimizing curve called the geodesic denoted identically by $q(t)(=c(t))$ must satisfy the Euler equation

$$\ddot{q}^k(t) + \Gamma^k_{ij}\dot{q}^i(t)\dot{q}^j(t) = -\lambda(t)\cdot\left(\operatorname{grad}\varphi(\mathbf{x}(t))\right)^k, \tag{30}$$

together with the constraint condition $\varphi(\mathbf{x}(t)) = \xi$, where

$$\operatorname{grad}\varphi(\mathbf{x}(t)) = G^{-1}(q(t))J^T(q)\frac{\partial\varphi}{\partial\mathbf{x}}, \tag{31}$$

and $J^T(q) = \partial\mathbf{x}^T/\partial q$. It should be noted that, from the inner product of (30) and $w = J^T\partial\varphi/\partial\mathbf{x}$, it follows that

$$\sum_k\left(w^k\ddot{q}^k + w^k\Gamma^k_{ij}\dot{q}^i\dot{q}^j\right) = -\lambda\sum_k w^k g^{kj}w^j. \tag{32}$$

Since the holonomic constraint $\varphi(\mathbf{x}(q)) = \xi$ implies $\langle w,\dot{q}\rangle = 0$, it follows that

$$\sum_{k=1}^4\left(w^k\ddot{q}^k + \left(\frac{\mathrm{d}}{\mathrm{d}t}w^k\right)\dot{q}^k\right) = 0. \tag{33}$$

Substituting this into (32), we obtain

$$\lambda(t) = \frac{1}{w^TG^{-1}w}\left\{\sum_k\left(\dot{w}^k\dot{q}^k - \sum_{i,j}w^k\Gamma^k_{ij}\dot{q}^i\dot{q}^j\right)\right\}. \tag{34}$$

From the Riemannian geometry, the constraint force $\lambda(t)$ with the grad $\{\varphi(\mathbf{x}(q))\}$ stands for a component of the image space of $w(=J^T(q)\partial\varphi/\partial\mathbf{x})$ that is orthogonal to the kernel TF_ξ of w. In other words, this component is cancelled out by the image space component of the left hand side of (32). From the physical point of view, $\lambda(t)$ should be regarded as a magnitude of the constraint force that presses the surface $\varphi(\mathbf{x}(q)) = \xi$ in its normal direction. In order to compromise the mathematical argument with such physical reality, let us suppose that the joint actuators can supply the control torques

$$u = \lambda_d\cdot J^T(q)\frac{\partial\varphi}{\partial\mathbf{x}} + g(q). \tag{35}$$

Then, by substituting this into (27), we obtain the Lagrange equation of motion under the constraint $\varphi(\mathbf{x}(q)) = \xi$:

$$\begin{aligned} G(q)\ddot{q} + \left\{\frac{1}{2}\dot{G} + S\right\}\dot{q} &= -(\lambda-\lambda_d)J^T(q)\frac{\partial\varphi}{\partial\mathbf{x}} \\ &= -\Delta\lambda J^T(q)\frac{\partial\varphi}{\partial\mathbf{x}}, \end{aligned} \tag{36}$$

where $\Delta\lambda = \lambda - \lambda_d$. It should be noted that introduction of the first term of control signal of (35) does not affect the solution orbit on the constraint manifold, and further it keeps the constraint condition during motion by rendering $\lambda(t)(=\lambda_d+\Delta\lambda(t))$ positive. In a mathematical sense, exertion of the joint torque $\lambda_d J^T(\partial\varphi/\mathbf{x})$ plays a role of "pressing" or "lifting" of the image space spanned from the gradient of the constraint equation. Further, note that (36) is of an implicit function form with the Lagrange multiplier $\Delta\lambda$. To affirm the argument of treatment of the geodesics through this implicit form, we show an explicit form of the Lagrange equation expressed on the orthogonally projected space (kernel space) by introducing the orthogonal transformation

$$\dot{q} = \left(P, w\|w\|^{-1}\right)\begin{pmatrix}\dot{\boldsymbol{\eta}}\\ \dot{z}\end{pmatrix} = Q\dot{\bar{q}}, \tag{37}$$

where P is a 4×3 matrix whose column vectors with the unit norm are orthogonal to w, and $\dot{\boldsymbol{\eta}}$ denotes a 3×1 matrix (3-dim. vector) and $\dot{z}$ a scalar. Since Q is an orthogonal matrix, $Q^{-1} = Q^T$. Hence, if $\dot{q} \in \ker(w)\,(=TF_\xi)$, then $\dot{z} = 0$. Restriction of (36) to the kernel space of w can be attained by multiplying (36) by P^T from the left such that

$$P^TG(q)\frac{\mathrm{d}}{\mathrm{d}t}(P\dot{\boldsymbol{\eta}}) + P^T\left\{\frac{1}{2}\dot{G} + S\right\}P\dot{\boldsymbol{\eta}} = 0, \tag{38}$$

which is reduced to the Eular equation in $\dot{\boldsymbol{\eta}}$:

$$\overline{G}(q)\ddot{\boldsymbol{\eta}} + \left\{\frac{1}{2}\dot{\overline{G}} + \overline{S}\right\}\dot{\boldsymbol{\eta}} = 0, \tag{39}$$

or equivalently

$$\ddot{\eta}^k + \overline{\Gamma}^k_{ij}\dot{\eta}^i\dot{\eta}^j = 0, \quad k = 1,\ldots,n-1(=3), \tag{40}$$

where $\overline{G}(q) = P^TG(q)P$, $\overline{\Gamma}^k_{ij}$ the Christoffel symbol for $(\overline{g}_{ij}) = \overline{G}$, and

$$\overline{S} = P^TSP - \frac{1}{2}\dot{P}^TGP + \frac{1}{2}P^TG\dot{P}, \tag{41}$$

which is skew symmetric, too. Note that the transformation Q is isometric, and (40) stands for the geodesic equation on the constraint Riemannian submanifold.

5. Hybrid Control for Redundant Systems and Stability on a Submanifold

Let us now reconsider a hybrid position/force feedback control scheme, which is of the form

$$u = g(q) + \lambda_d J^T(q)\frac{\partial\varphi}{\partial\mathbf{x}} + C\dot{q} + J^T(q)(\zeta\sqrt{k}\dot{\mathbf{x}} + k\Delta\mathbf{x}), \quad (42)$$

where $\varphi(\mathbf{x}) = z$, $\dot{\mathbf{x}} = (\dot{x}, \dot{y}, 0)^T$, $\Delta\mathbf{x} = (x - x_d, y - y_d, 0)$. This type of hybrid control is an extension of the McClamroch and Wang's method [7, 8] to cope with a robotic system that is subject to redundancy in DOFs. From now on, we redefine the Jacobian matrix $J(q)$ as 2×4 matrix $J(q) = (\partial x/\partial q^T, \partial y/\partial q^T)$ because we consider a special case of $\varphi(\mathbf{x}) = z$, that is, the constraint $z - \xi = 0$, and solution trajectories $q(t)$ that satisfy $z(q(t)) - \xi = 0$. In relation to this, denote also the two-dimensional vector (x, y) by x and $(\Delta x, \Delta y)$ by $\Delta\mathbf{x}$. It should be noted that the orthogonality relationship among (x, y, z) coordinates in $\mathbf{E}^3$ does not imply the orthogonality among $\partial x/\partial q$, $\partial y/\partial q$, and $\partial z/\partial q (= \partial\varphi/\partial q)$. Therefore, $\partial z/\partial q$ is not orthogonal to $J^T(q)(= (\partial x/\partial q, \partial y/\partial q))$, and hence the last term of the right hand side of (42) contains both components of image (w) and $\ker(w)$.

Now, substituting this into (27) yields

$$\begin{aligned} G(q)\ddot{q} + \left\{\frac{1}{2}\dot{G} + S + C\right\}\dot{q} + J^T(q)\{\zeta\sqrt{k}\dot{\mathbf{x}} + k\Delta\mathbf{x}\} \\ = -\Delta\lambda\frac{\partial z(q)}{\partial q}. \end{aligned} \quad (43)$$

Evidently the inner product of (43) and $\dot{q}$ under the constraint $z(q) = \xi$ leads to

$$\frac{\mathrm{d}}{\mathrm{d}t}E(q, \dot{q}) = -\dot{q}C\dot{q} - \zeta\sqrt{k}\|\dot{\mathbf{x}}\|^2, \quad (44)$$

where

$$E(q, \dot{q}) = \frac{1}{2}\dot{q}^T G(q)\dot{q} + \frac{k}{2}\|\Delta\mathbf{x}\|^2. \quad (45)$$

Unfortunately, this quantity is not positive definite in the tangent bundle TF_ξ. Nevertheless, it is possible to see that magnitudes of $\dot{q}(t)$ and $\Delta\mathbf{x}(t)$ remain small if at initial time $t = 0$ both magnitudes $\|\dot{q}(0)\|$ and $\|\Delta\mathbf{x}(0)\|$ are set small. Next, let us introduce the equilibrium manifold defined by the set

$$\mathrm{EM}_1 = \{q : z(q) = \xi,\ x(q) = x_d,\ y(q) = y_d\}, \quad (46)$$

which is of one dimension. Fortunately as discussed in the paper [9], it is possible to confirm that a modified scalar function

$$W_\alpha = E(q, \dot{q}) + \alpha\dot{q}^T G(q)P_\varphi J^T(q)\Delta\mathbf{x} \quad (47)$$

becomes positive definite in TF_ξ with an appropriate positive parameter $\alpha > 0$, provided that the physical scale of the robot is ordinary, and feedback gains C and k are chosen adequately. Here, in (47), P_φ is defined as $I_4 - ww^T/\|w\|^2$. Furthermore, if in a Riemannian ball in F_ξ defined as $B(q(0), r_0) = \{q : d(q, q(0)) < r_0\}$, the Jacobian matrix $J(q)$ is nondegenerate, then it can be expected that there exist positive numbers σ_m and σ_M such that

$$\sigma_M I_2 \geq JJ^T \geq JP_\varphi J^T \geq \sigma_m I_2. \quad (48)$$

Further, to simplify the argument, we choose $C = cI_4$ with a constant $c > 0$. Then, it follows from differentiation of $V(= \dot{q}^T G(q)P_\varphi J^T(q)\Delta\mathbf{x})$ that

$$\begin{aligned} \dot{V} = &-\{\zeta\sqrt{k}\dot{\mathbf{x}} + k\Delta\mathbf{x}\}^T JP_\varphi J^T\Delta\mathbf{x} \\ &- c\dot{q}^T P_\varphi J^T\Delta\mathbf{x} + \dot{q}^T GP_\varphi J^T\dot{\mathbf{x}} - h(\dot{q}, G)\Delta\mathbf{x}, \end{aligned} \quad (49)$$

where

$$h(\dot{q}, G) = \dot{q}^T\left\{\left(\frac{1}{2}\dot{G}P_\varphi - SP_\varphi - G\dot{P}_\varphi\right)J^T - GP_\varphi\dot{J}^T\right\}. \quad (50)$$

This 1×2-vector h is quadratic in components of $\dot{q}$, and each coefficient of $\dot{q}_i\dot{q}_j$ (for $i, j = 1, \ldots, 4$) is at most of order of the maximum spectre radius of $G(q)$ denoted by g_M. Hence, it follows from (49) that

$$|h(\dot{q}, G)\Delta\mathbf{x}| \leq g_M l_0 \|\dot{q}\|^2 \|\Delta\mathbf{x}\|, \quad (51)$$

where l_0 signifies a constant that is of order of the maximum link length (because the Jacobian matrix $\partial\mathbf{x}/\partial q^T$ is homogeneously related to the three link lengths of the robot shown in Figure 4). Further, note that $\dot{q}^T P_\varphi = 0$ in this case and remark that

$$\dot{q}^T GP_\varphi J^T\dot{\mathbf{x}} \leq \frac{1}{2}\dot{q}^T GG\dot{q} + \frac{1}{2}\dot{\mathbf{x}}^T JP_\varphi J^T\dot{\mathbf{x}}, \quad (52)$$

$$-\zeta\sqrt{k}\dot{\mathbf{x}}^T JP_\varphi J^T\Delta\mathbf{x} \leq \frac{\zeta k}{2}\Delta\mathbf{x}^T JP_\varphi J^T\Delta\mathbf{x} + \frac{\zeta}{2}\dot{\mathbf{x}}^T(JJ^T)\dot{\mathbf{x}}. \quad (53)$$

Thus, substituting (51) to (52) into (49) yields

$$\begin{aligned} \dot{V} \leq &-\left\{k - \frac{1}{2} - \frac{\zeta k}{2}\right\}\Delta\mathbf{x}^T JP_\varphi J^T\Delta\mathbf{x} \\ &+ \frac{1}{2}\dot{q}^T GG\dot{q} + \frac{1+\zeta}{2}\dot{\mathbf{x}}^T JJ^T\dot{\mathbf{x}} + g_M l_0\|\dot{q}\|^2\|\Delta\mathbf{x}\|. \end{aligned} \quad (54)$$

With the aid of a positive parameter $\alpha > 0$, it is easy to see that

$$\begin{aligned} W_\alpha &\geq E - \frac{\alpha}{2}\dot{q}^T G(q)G(q)\dot{q} - \frac{\alpha}{2}\Delta\mathbf{x}^T JP_\varphi J^T\Delta\mathbf{x} \\ &= \frac{1}{2}\dot{q}^T\{G - \alpha GG\}\dot{q} + \frac{1}{2}\Delta\mathbf{x}^T(kI_2 - \alpha JP_\varphi J^T)\Delta\mathbf{x}. \end{aligned} \quad (55)$$

Now, suppose that the robot has an ordinary physical scale with

$$g_M \leq 0.001\ [\mathrm{kgm}^2], \qquad l_0 \leq 0.2\ [\mathrm{m}]. \quad (56)$$

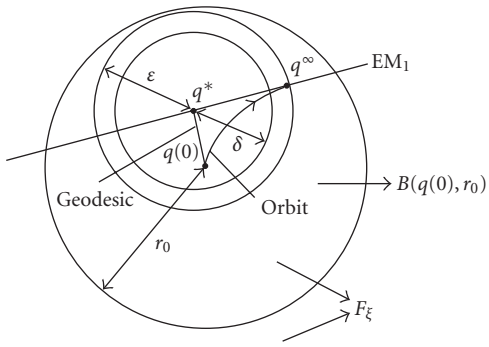

Figure 5: Definition of the Riemannian ball $B(q^*, \delta)$. Any orbit starting from $B(q^*, \delta)$ converges to $\mathrm{EM}_1 \cap B(q^*, \varepsilon)$.

Then, it is possible to see that

$$\dot{W}_\alpha = \dot{E} + \alpha \dot{V} \leq -\frac{\alpha k \sigma_m}{2} \|\Delta \mathbf{x}\|^2 - \frac{c}{3} \|\dot{q}\|^2, \tag{57}$$

provided that $\|\Delta \mathbf{x}(t)\| < 0.3\,[\mathrm{m}]$, $(1 + \zeta k) \leq k$, and $\zeta\sqrt{k} > \alpha(1+\zeta)/2$. From the practical point of view of control design for the handwriting robot, ζ is set around $\zeta = \sqrt{2}/2$, and k is chosen between $5.0 \sim 20.0\,[\mathrm{kg/s^2}]$ (see [9]). On account of (48) and (56),

$$W_\alpha \geq (1 - \alpha\gamma_0)E, \tag{58}$$

and similarly,

$$W_\alpha \leq (1 + \alpha\gamma_0)E, \tag{59}$$

where $\gamma_0 = \max(g_M, \sigma_M/k)$. Then, if the damping factor can be selected to satisfy both inequalities $c \geq (3/2)(\alpha\sigma_m g_M)$ and $c > \alpha g_M l_0$, then (57) is reduced to

$$\dot{W}_\alpha \leq \frac{-\alpha\sigma_m}{1 + \alpha\gamma_0} W_\alpha, \tag{60}$$

where γ_0 can be set as $\gamma_0 = \sigma_M/k$ which is larger than g_M. Hence, by choosing $\alpha = 1/2\gamma_0 = k/2\sigma_M$, it follows from (60) and (59) that

$$W_\alpha(t) = W_\alpha(0)e^{-\gamma t}, \tag{61}$$

where $\gamma = k\sigma_m/3\sigma_M$.

Now, suppose that q^* in $\mathrm{EM}_1 \cap B(q(0), r_0)$ is the minimizing point that connects with $q(0)$ among all geodesics from $q(0)$ to any point of $\mathrm{EM}_1 \cap B(q(0), r_0)$. We call q^* a reference point corresponding to $q(0)$.

Definition 1 (stable Riemannian ball on a submanifold). If for any $\varepsilon > 0$, there exists the number $\delta(\varepsilon) > 0$ such that any solution trajectory (orbit) of (43) starting from an arbitrary initial position inside $B(q^*, \delta(\varepsilon))$ with $\dot{q}(0) = 0$ remains inside $B(q^*, \varepsilon)$ for any $t > 0$, then the reference point q^* on EM_1 is said to be stable on a submanifold (see Figure 5).

It can be concluded from the exponential convergence of W_α to zero and the inequality $E \leq 2W_\alpha$ when $\alpha = 1/2\gamma_0$ that any point inside $B(q^*, \delta(\varepsilon))$ included in $B(q(0), r_1)$ for some $r_1 (< r_0)$ is stable on a submanifold and further such a solution trajectory converges asymptotically to some q^∞ on the equilibrium manifold EM_1 in an exponential speed of convergence. This can be well understood as a natural extension of the well-known Dirichlet-Lagrange stability under holonomic constraints to a system with DOF-redundancy. The details of the proof are presented in Appendix A.

It should be noticed from the proof in Appendix A that asymptotic convergence of the solution trajectory to some q^∞ on the equilibrium manifold implies also the asymptotic convergence of constraint force $\lambda(t)$ to λ_d as $t \to \infty$ because $\Delta\lambda = \lambda - \lambda_d$ is expressed as

$$\begin{aligned}\Delta\lambda(t) = \frac{1}{w^T G^{-1} w} \Bigg\{ \sum_k \Bigg(\dot{w}\dot{q}^k - \sum_{i,j} w^k \Gamma_{ij}^k \dot{q}^i \dot{q}^j \Bigg) \\ - w^T J^T (\zeta\sqrt{k}\dot{\mathbf{x}} + k\Delta\mathbf{x}) \Bigg\},\end{aligned} \tag{62}$$

and this right hand side converges to zero as $t \to \infty$.

The stability notion of a Riemannian ball in a neighborhood of a reference equilibrium state q^* on EM_1 is extended to cope with the case that the initial velocity vector $\dot{q}(0)$ is not zero. To do this, we define an extended Riemannian ball in the tangent bundle $M \times TF_\xi$ around $(q^*, \dot{q} = 0)$ in such a way that

$$\begin{aligned} &B\{(q^*, 0); (r_0, r_K)\} \\ &\quad = \left\{ (q, \dot{q}) : d(q, q^*) < r_0,\ \sqrt{(1/2)\dot{q}^T \overline{G}(q)\dot{q}} < r_K \right\}, \end{aligned} \tag{63}$$

where $d(q, q^*)$ denotes the distance between q and q^* restricted to the submanifold F_ξ, and $\overline{G}$ is defined below (40).

Definition 2 (asymptotic stability on a submanifold). If for any $\varepsilon > 0$, there exist numbers $\delta(\varepsilon)$ and $\delta_K(\varepsilon)$ such that any solution trajectory of (43) starting from an arbitrary initial position and velocity inside $B\{(q^*, 0); (\delta(\varepsilon), \delta_K(\varepsilon))\}$ remains in $B\{(q^*, 0); (\varepsilon, r_K)\}$ and further converges asymptotically to some equilibrium point $q^\infty \in \mathrm{EM}_1$ with still state, then the reference point with its posture on EM_1 is said to be asymptotically stable on a constraint submanifold.

It should be remarked that Bloch et al. [10] introduces originally the concept of stabilization for a class of nonholonomic dynamic systems based upon a certain configuration space. The redefinition of stability concepts introduced above is free from any choice of configuration spaces (local coordinates) and assumptions on an invertibility condition (that is almost equivalent to nonlinear control based on compensation for nonlinear inertia-originated terms). Liu and Li [11] also gave a geometric approach to modeling of constrained mechanical systems based upon orthogonal projection maps without deriving a compact explicit form of the Euler equation like (40) with a reduced dimension due to constraints. Therefore, the proposed control scheme was developed on the basis of compensation for the inertia-originated nonlinear terms (that is almost equivalent to

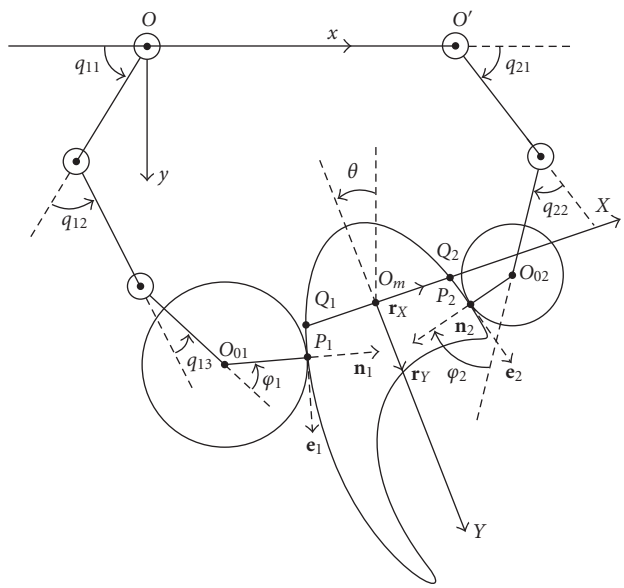

Figure 6: Two-dimensional object grasping by a pair of multijoint robot fingers.

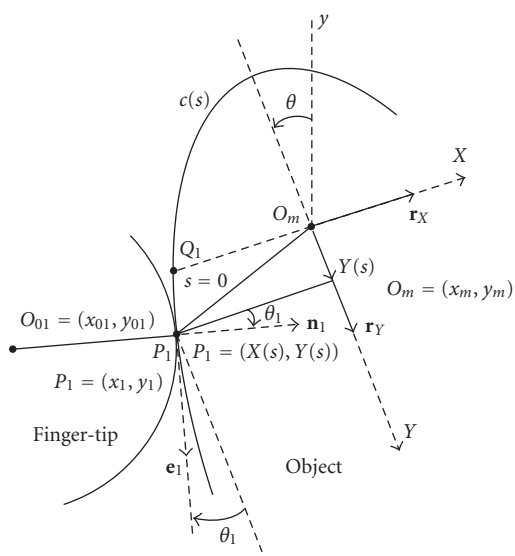

Figure 7: Definitions of physical symbols in relation to rolling contact. θ_1 denotes $\theta_1(s)$ appearing in (64).

the computed torque method). A naive idea of stability on a manifold by using different metrics for the constrained submanifold and its tangent space was first presented in [9] and used in stabilization control of robotic systems with DOF redundancy [12, 13].

6. 2-dimensional Stable Grasp of a Rigid Object with Arbitrary Shape

Consider a control problem for stable grasping of a 2D rigid object by a pair of planar multijoint robot fingers with hemispherical fingertips as shown in Figure 6. In this figure, the two robots are installed on the horizontal xy-plane $\mathbf{E}^2$. We denote the object mass center by O_m with the coordinates (x_m, y_m) expressed in the inertial frame. On the other hand, we express a local coordinate system fixed at the object by O_m-XY together with unit vectors $\mathbf{r}_X$ and $\mathbf{r}_Y$ along the X-axis and Y-axis, respectively (see Figure 7). The left-hand side surface of the object is expressed by a curve $c(s)$ with local coordinates $(X(s), Y(s))$ in terms of arc length parameter s as shown in Figure 7.

First, suppose that at the left-hand contact point P_1 the fingertip of the left finger is contacting with the object. Denote the unit normal at P_1 by $\mathbf{n}_1$ and the unit tangent vector by $\mathbf{e}_1$. Note that $\mathbf{n}_1$ is normal to both the object surface and finger-end sphere at P_1, and $\mathbf{e}_1$ is tangent to them at P_1, too. If we denote position P_1 by local coordinates $(X(s), Y(s))$ fixed at the object (see Figure 7), then the angle from the X-axis to the unit normal $\mathbf{n}_1$ is assumed to be determined by a function on the curve:

$$\theta_1(s) = \operatorname{arct}\left(\frac{X'(s)}{Y'(s)}\right), \tag{64}$$

where $X'(s) = \mathrm{d}X(s)/\mathrm{d}s$ and $Y' = \mathrm{d}Y(s)/\mathrm{d}s$. In this paper, all angles are set positive in counterclockwise direction. Then,

$$\overline{P_1P_1'} = l_{n1}(s) = -X(s)\cos\theta_1(s) + Y(s)\sin\theta_1(s), \tag{65}$$

which is dependent only on s and, therefore, a shape function of the object. On the other hand, this length can be expressed by using the inertial frame coordinates in the following way (see Figure 8):

$$\begin{aligned}\overline{P_1P_1'} = {} & (x_m - x_{01})\cos(\theta + \theta_1(s)) \\ & - (y_m - y_{01})\sin(\theta + \theta_1(s)) - r_1.\end{aligned} \tag{66}$$

Hence, the left-hand contact constraint can be expressed by the holonomic constraint

$$\begin{aligned}Q_1 = {} & -(x_m - x_{01})\cos(\theta + \theta_1) \\ & + (y_m - y_{01})\sin(\theta + \theta_1) + (r_1 + l_{n1}(s)) \\ = {} & 0,\end{aligned} \tag{67}$$

where $l_{n1}(s)$ denotes the right-hand side of (65) and $\theta_1 = \theta_1(s)$ for abbreviation.

Next, we note that the length $\overline{O_mP_1'}$ can be regarded also as a shape function of the object given by

$$\overline{O_mP_1'} = l_{e1}(s) = X(s)\sin\theta_1 + Y(s)\cos\theta_1. \tag{68}$$

On the other hand, this quantity can be also expressed as

$$\begin{aligned}\overline{O_mP_1'} = {} & Y_1(t) \\ = {} & -(x_m - x_{01})\sin(\theta + \theta_1) - (y_m - y_{01})\cos(\theta + \theta_1).\end{aligned} \tag{69}$$

As discussed in [13], in the light of the book [14], pure rolling at P_1 is defined by the condition that the translational velocity of P_1 on the finger sphere is equal to that of P_1

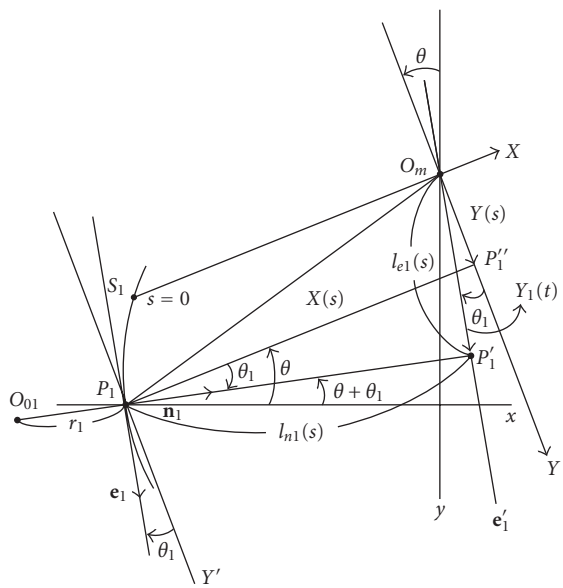

Figure 8: Physical and geometrical meanings of key variables $l_{n1}(s)$ and $l_{e1}(s)$ defined in relation to the object contour $c(s)$ expressed in terms of length parameter s of the curve.

on the object contour along the $\mathbf{e}_1$-axis. Hence, by denoting $p_1 = q_{11} + q_{12} + q_{13}$, we have

$$\begin{aligned} &- r_1\dot{p}_1 + r_1\dot{\theta} \\ &\quad = -\dot{Y}_1 \\ &\quad = (\dot{x}_m - \dot{x}_{01})\sin(\theta+\theta_1) + (\dot{y}_m - \dot{y}_{01})\cos(\theta+\theta_1) \\ &\qquad + \{(x_m - x_{01})\cos(\theta+\theta_1) - (y_m - y_{01})\sin(\theta+\theta_1)\}\dot{\theta}, \end{aligned} \tag{70}$$

which from (67) can be reduced to

$$\begin{aligned} &- r_1\dot{p}_1 - l_{n1}\dot{\theta} + (\dot{x}_{01} - \dot{x})\sin(\theta+\theta_1) \\ &\quad + (\dot{y}_{01} - \dot{y})\cos(\theta+\theta_1) = 0. \end{aligned} \tag{71}$$

This constraint form is Pfaffian. As to the contact point P_2 at the right-hand finger end, a similar nonholonomic constraint can be obtained. Thus, by introducing Lagrange's multipliers f_1 and f_2 associated with holonomic constraints $Q_i = 0$ $(i = 1, 2)$, it is possible to construct a Lagrangian:

$$\begin{aligned} L = &\frac{1}{2}\sum \dot{q}_i^T G_i(q_i)\dot{q}_i + \frac{1}{2}\{M\dot{x}^2 + M\dot{y}^2 + I\dot{\theta}^2\} \\ &- f_1 Q_1 - f_2 Q_2, \end{aligned} \tag{72}$$

where q_i denote the joint vector for finger i, $G_i(q_i)$ the inertia matrix for finger i, M and I denote the mass and inertia moment of the object. Since both the rolling constraints are Pfaffian, it is possible to associate (71) and its corresponding form at P_2 with another multipliers λ_i $(i = 1, 2)$ and regard them as external forces. Thus, by applying the variational principle to the Lagrangian together with the external forces, we obtain the Lagrange equation of motion of the overall fingers-object system:

$$I\ddot{\theta} - f_1 Y_1 + f_2 Y_2 - \lambda_1 l_{n1} + \lambda_2 l_{n2} = 0, \tag{73}$$

$$M\begin{pmatrix}\ddot{x}\\ \ddot{y}\end{pmatrix} - f_1\mathbf{n}_1 - f_2\mathbf{n}_2 - \lambda_1\mathbf{e}_1 - \lambda_2\mathbf{e}_2 = 0, \tag{74}$$

$$\begin{aligned} &G_i(q_i)\ddot{q}_i + \left\{\frac{1}{2}\dot{G}_i + S_i\right\}\dot{q}_i + f_i J_i^T(q_i)\mathbf{n}_i \\ &\quad + \lambda_i\{J_i^T(q_i)\mathbf{e}_i + (-1)^i r_i\mathbf{p}_i\} = u_i, \quad i = 1, 2, \end{aligned} \tag{75}$$

where $\mathbf{p}_1 = (1, 1)^T$, $\mathbf{p}_2 = (1, 1, 1)^T$, and $J_i^T(q_i) = \partial(x_{0i}/y_{0i})/\partial q_i$, and

$$\mathbf{n}_i = (-1)^i\begin{pmatrix}-\cos(\theta+\theta_i)\\ \sin(\theta+\theta_i)\end{pmatrix}, \qquad \mathbf{e}_i = \begin{pmatrix}\sin(\theta+\theta_i)\\ \cos(\theta+\theta_i)\end{pmatrix} \tag{76}$$

for $i = 1, 2$. It is important to note that the object dynamics of (73) and (74) can be recast in the form

$$H_0\ddot{\mathbf{z}} + f_1\mathbf{w}_1 + f_2\mathbf{w}_2 + \lambda_1\mathbf{w}_3 + \lambda_2\mathbf{w}_4 = 0, \tag{77}$$

where $\mathbf{z} = (x, y, \theta)$, and

$$\mathbf{w}_i = \begin{pmatrix}-\mathbf{n}_i\\ (-1)^i Y_i\end{pmatrix}, \quad \mathbf{w}_{i+2} = \begin{pmatrix}-\mathbf{e}_i\\ (-1)^i l_{ni}\end{pmatrix}, \quad i = 1, 2, \tag{78}$$

which are of a two-dimensional wrench vector. This implies that if the sum of all wrench vectors converges to zero, then the force/torque balance is established. Further, if we define

$$\begin{aligned} \mathbf{X} &= (x, y, \theta, q_1^T, q_2^T)^T, \\ \mathbf{u} &= (0, 0, 0, u_1^T, u_2^T)^T, \\ G(\mathbf{X}) &= \operatorname{diag}(M, M, I, G_1(q_1), G_2(q_2)), \\ S(\mathbf{X}, \dot{\mathbf{X}}) &= \operatorname{diag}(0, 0, 0, S_1, S_2), \end{aligned} \tag{79}$$

then (73) ~ (75) can be written in the form

$$G(\mathbf{X})\ddot{\mathbf{X}} + \left\{\frac{1}{2}\dot{G} + S\right\}\dot{\mathbf{X}} + \sum_{i=1,2}\left(f_i\frac{\partial Q_i}{\partial \mathbf{X}} + \lambda_i\frac{\partial R_i}{\partial \mathbf{X}}\right) = \mathbf{u}, \tag{80}$$

where

$$R_i = -(-1)^i r_i\{(\theta + \theta_i(s_i)) - \mathbf{p}_i^T q_i\} + Y_i + \psi_i(s_i), \tag{81}$$

and ψ_i signifies a function depending only on the shape parameter s_i. The details of the integral form of (81) will be discussed in Appendix B. Comparing (80) with (27), it must be understood that a similar but extended argument of Section 4 can be applied even for a case of physical interaction with complex holonomic constraints and nonholonomic (but Pfaffian) constraints. More precisely, when $\mathbf{u} = 0$ in (80), the image space of the Riemannian manifold $(\mathbf{X}, G(\mathbf{X}))$ with constraints $Q_1 = 0$ and $Q_2 = 0$ is spanned from the gradients

$$G^{-1}(\mathbf{X})\left(\frac{\partial Q_1}{\partial \mathbf{X}}, \frac{\partial Q_2}{\partial \mathbf{X}}, \frac{\partial R_1}{\partial \mathbf{X}}, \frac{\partial R_2}{\partial \mathbf{X}}\right), \tag{82}$$

and the kernel space should be defined as the orthogonal compliment to the image space. Note that the rolling constraints of (71) and another for $i = 2$ induce further restriction of the tangent space to a more subdimensional linear space. Here, $\partial R_i/\partial \mathbf{X}$ should be taken at the time instant t under the condition that s_i are fixed. Nevertheless, as shown in Appendix B, it is quite interesting to know that R_i for $i = 1, 2$ can be regarded as a constant function in change of t even under any infinitesimally small variation of s_i, that is, $\mathrm{d}R_i/\mathrm{d}t = 0$ for $i = 1, 2$. In other words, $R_i = \text{constant}$ $(i = 1, 2)$, and these expressions imply a holonomic constraint. Such a geometric structure of decomposition of the tangent space to an image space of constraint gradients and its orthogonal compliment is known in general mathematical terminology (see [15, 16]) but has not yet been critically spelled out in the case of existence of rolling contact connections between curved rigid bodies.

The Euler equation of (80) can be expressed in a similar form to (1) by introducing the constraint vector Φ and the vector of Lagrange multipliers $\boldsymbol{\lambda}$ as

$$\Phi = (Q_1, R_1, Q_2, R_2), \qquad \boldsymbol{\lambda} = (f_1, \lambda_1, f_2, \lambda_2)^T. \tag{83}$$

Then, (80) can be written in the form

$$G(\mathbf{X})\ddot{X} + \left\{\frac{1}{2}\dot{G} + S\right\}\dot{\mathbf{X}} + \frac{\partial \Phi}{\partial \mathbf{X}}\boldsymbol{\lambda} = \mathbf{u}, \tag{84}$$

which must be valid for the constraint $\dot{\mathbf{X}}^T(\partial\Phi/\partial\mathbf{X}) = 0$. We denote the $(n-4)$-dimensional kernel space of $\partial\Phi/\partial\mathbf{X}$ by $V_{\mathbf{X}}$ and its 4-dimensional orthogonal compliment as the image space of $G^{-1}(X)\partial\Phi/\partial\mathbf{X}$ by $H_{\mathbf{X}}$.

We are now in a position to derive an update law of the length parameters s_1 and s_2 along the object contours. Firstly, it is important to verify that the holonomic constraint $Q_1 = 0$ is invariant under any infinitesimally small variation of s_1. In fact, we see from (64) to (69) that

$$\begin{aligned}
\frac{\partial Q_1}{\partial s} &= \{(x_m - x_{01})\sin(\theta + \theta_1) + (y_m - y_{01})\cos(\theta + \theta_1)\} \\
&\quad \times \frac{\partial \theta_1}{\partial s} + \frac{\partial}{\partial s} l_{n1}(s) \\
&= -l_{e1}(s)\frac{\partial \theta_1(s)}{\partial s} + \{-X'(s)\cos\theta_1 + Y'(s)\sin\theta_1\} \\
&\quad + \{X(s)\sin\theta_1 + Y(s)\cos\theta_1\}\frac{\partial \theta_1(s)}{\partial s} \\
&= -l_{e1}(s)\frac{\partial \theta_1}{\partial s} + 0 + l_{e1}(s)\frac{\partial \theta_1}{\partial s} = 0,
\end{aligned} \tag{85}$$

where we denote $s_1 = s$ for simplicity. Next, it is possible to show that if $\theta_1(s)$ is variable, then $\theta_1'(s) = \mathrm{d}\theta_1(s)/\mathrm{d}s = \kappa_1(s)$, where $\kappa_1(s)$ is the curvature of the left-hand contour of the object. Then, it is obvious from Figures 6 to 8 that

$$\frac{r_1(-\Delta p_1 + \Delta\theta + \Delta\theta_1)}{\Delta t} = -\Delta s = -\kappa_1^{-1}(s)\frac{\Delta\theta_1}{\Delta t}, \tag{86}$$

where $\kappa_1(s) \neq 0$. Since $\theta_1'(s) = \kappa_1(s)$, (86) is reduced to

$$\frac{r_1(-\Delta p_1 + \Delta\theta)}{\Delta t} = -(1 + r_1\kappa_1(s))\frac{\Delta s}{\Delta t}. \tag{87}$$

This equation should be accompanied with the Euler-Lagrange equation (80). This can be also regarded as a nonholonomic constraint to (80). As to the right-hand contour, it follows that

$$\frac{\mathrm{d}s_2}{\mathrm{d}t} = \frac{-r_2}{1 + r_2\kappa_2(s_2)}(-\dot{p}_2 + \dot{\theta}). \tag{88}$$

7. Lifting in Horizontal Space and Force/Torque Balance

First, in order to find an adequate lifting that belongs to the image space $H_{\mathbf{X}}$ and realizes the force/torque balance (see (77)) in the sense that

$$f_{1d}\mathbf{w}_1 + f_{2d}\mathbf{w}_2 + \lambda_{1d}\mathbf{w}_3 + \lambda_{2d}\mathbf{w}_4 = 0, \tag{89}$$

we remark that

$$\begin{pmatrix} x_m - x_{01} \\ y_m - y_{01} \end{pmatrix} = R_{\theta+\theta_1}\begin{pmatrix} r_1 + l_{n1}(s_1) \\ -Y_1 \end{pmatrix} \tag{90}$$

$$-\begin{pmatrix} x_m - x_{02} \\ y_m - y_{02} \end{pmatrix} = R_{\theta+\theta_2}\begin{pmatrix} l_n(s_2) + r_2 \\ Y_2 \end{pmatrix}, \tag{91}$$

where

$$\begin{aligned}
R_{\theta+\theta_1} &= (\mathbf{n}_1(\theta), \mathbf{e}_1(\theta)) \\
&= \begin{pmatrix} \cos(\theta + \theta_1) & \sin(\theta + \theta_1) \\ -\sin(\theta + \theta_1) & \cos(\theta + \theta_2) \end{pmatrix}.
\end{aligned} \tag{92}$$

We also define

$$\begin{aligned}
R_{\theta+\theta_2} &= \begin{pmatrix} \cos(\theta + \theta_2) & \sin(\theta + \theta_2) \\ -\sin(\theta + \theta_2) & \cos(\theta + \theta_2) \end{pmatrix}, \\
R_\theta &= \begin{pmatrix} \cos\theta & \sin\theta \\ -\sin\theta & \cos\theta \end{pmatrix}.
\end{aligned} \tag{93}$$

Then, it follows from (90) and (91) that

$$\begin{aligned}
-\begin{pmatrix} x_{01} - x_{02} \\ y_{01} - y_{02} \end{pmatrix} &= R_\theta\left\{R_{\theta_1}\begin{pmatrix} r_1 + l_{n1}(s_1) \\ -Y_1 \end{pmatrix}\right. \\
&\qquad \left. + R_{\theta_2}\begin{pmatrix} r_2 + l_{n2}(s_2) \\ Y_2 \end{pmatrix}\right\} \\
&= R_\theta\begin{pmatrix} l(\mathbf{s}, Y_1, Y_2) \\ -d(\mathbf{s}, Y_1, Y_2) \end{pmatrix},
\end{aligned} \tag{94}$$

where $\mathbf{s} = (s_1, s_2)$ and

$$\begin{aligned}
l(\mathbf{s}, Y_1, Y_2) &= (r_1 + l_{n1})\cos\theta_1 + (r_2 + l_{n2})\cos\theta_2 \\
&\quad - Y_1\sin\theta_1 + Y_2\sin\theta_2, \\
d(\mathbf{s}, Y_1, Y_2) &= (r_1 + l_{n1})\sin\theta_1 + (r_2 + l_{n2})\sin\theta_2 \\
&\quad + Y_1\cos\theta_1 - Y_2\cos\theta_2.
\end{aligned} \tag{95}$$

Thus, let us define

$$\begin{aligned}
f_{id} &= \frac{f_d}{r_1 + r_2}\{l\cos\theta_i + d\sin\theta_i\}, \\
\lambda_{id} &= (-1)^i\frac{f_d}{r_1 + r_2}\{-l\sin\theta_i + d\cos\theta_i\},
\end{aligned} \qquad i = 1, 2, \tag{96}$$

and remark that they satisfy

$$f_{1d}\mathbf{n}_1 + f_{2d}\mathbf{n}_2 + \lambda_{1d}\mathbf{e}_1 + \lambda_{2d}\mathbf{e}_2 = 0. \tag{97}$$

Further, note that

$$f_{1d}\mathbf{w}_1 + f_{2d}\mathbf{w}_2 + \lambda_{1d}\mathbf{w}_3 + \lambda_{2d}\mathbf{w}_4 = (0, 0, S_N)^T, \tag{98}$$

where

$$\begin{aligned} S_N &= \frac{f_d}{r_1 + r_2}\{-(l\cos\theta_1 + d\sin\theta_1)Y_1 \\ &\quad + (l\cos\theta_2 + d\sin\theta_2)Y_2 \\ &\quad - (l\sin\theta_1 - d\cos\theta_1)l_{n1} \\ &\quad - (l\sin\theta_2 - d\cos\theta_2)l_{n2}\} \\ &= \frac{f_d}{r_1 + r_2}\{l(r_1\sin\theta_1 + r_2\sin\theta_2) \\ &\quad - d(r_1\cos\theta_1 + r_2\cos\theta_2)\}. \end{aligned} \tag{99}$$

This shows according to (98) that if S_N tends to vanish, then the force/torque balance is established, that is, the total sum of wrench vectors exerted to the object becomes zero.

8. Control Signal for Blind Grasping and a Morse-Lyapunov Function

From the practical standpoint of designing a control signal for stable grasping, it is important to see that objects to be grasped are changeable, but the pair of robot fingers is always the same. That is, for designing control signals, we are unable to use physical parameters of the object such as the location (x_m, y_m) of its mass center and object geometry. On the contrary, it is possible to assume the knowledge of finger kinematics like finger link lengths and locations of the centers of finger-end spheres and to use measurement data of finger joint angles and angular velocities. In view of these points, let us propose a family of control signals defined as

$$u_i = -c_i\dot{q}_i + (-1)^i\frac{f_d}{r_1 + r_2}J_i^T(q_i)\begin{pmatrix} x_{01} - x_{02} \\ y_{01} - y_{02}\end{pmatrix} - r_i\widehat{N}_i\mathbf{p}_i, \quad i = 1, 2, \tag{100}$$

where

$$\widehat{N}_i(t) = \gamma_i^{-1}r_i\mathbf{p}_i^T(q_i(t) - q_i(0)), \tag{101}$$

and $\mathbf{p}_1 = (1, 1, 1)^T$, $\mathbf{p}_2 = (1, 1)^T$, c_i denotes a damping factor, and $\gamma_i > 0$ a positive gain specified later.

The closed loop dynamics of motion of the overall fingers-object system can be derived by substituting u_i of (100) into (75) for $i = 1, 2$. In order to spell out the dynamics in a more physically meaningful way for later discussions, first note the following three equalities:

$$\begin{aligned} &\frac{1}{2}\{(x_{01} - x_{02})^2 + (y_{01} - y_{02})^2\} = \frac{1}{2}(l^2 + d^2) \\ &f_{id}\frac{\partial Q_i}{\partial q_i} + \lambda_{id}\frac{\partial R_i}{\partial q_i} \\ &\quad = (-1)^i\left[J_i^T\left\{-f_{id}\begin{pmatrix}\cos(\theta + \theta_i) \\ -\sin(\theta + \theta_i)\end{pmatrix}\right.\right. \\ &\qquad\qquad \left.\left. + \lambda_{id}\begin{pmatrix}\sin(\theta + \theta_i) \\ \cos(\theta + \theta_i)\end{pmatrix}\right\} + \lambda_{id}r_i\mathbf{p}_i\right] \\ &\quad = \frac{(-1)^i f_d}{r_1 + r_2}\left\{-J_i^T R_\theta\begin{pmatrix} l \\ -d\end{pmatrix} + \lambda_{id}r_i\mathbf{p}_i\right\} \\ &\quad = (-1)^i\frac{f_d}{r_1 + r_2}\left\{J_i^T\begin{pmatrix} x_{01} - x_{02} \\ y_{01} - y_{02}\end{pmatrix} + \lambda_{id}r_i\mathbf{p}_i\right\}, \quad i = 1, 2, \end{aligned} \tag{102}$$

Then, by substituting (98), (102) into (73) to (75), it is possible to express the closed loop dynamics in the following forms:

$$\begin{aligned} &I\ddot{\theta} - \Delta f_1 Y_1 + \Delta f_2 Y_2 - \Delta\lambda_1 l_{n1} + \Delta\lambda_2 l_{n2} - S_N = 0, \\ &M\begin{pmatrix}\ddot{x} \\ \ddot{y}\end{pmatrix} + \Delta f_1\mathbf{n}_1(\theta) + \Delta f_2\mathbf{n}_2(\theta) - \Delta\lambda_1\mathbf{e}_1(\theta) - \Delta\lambda_2\mathbf{e}_2(\theta) = 0, \\ &G_i\ddot{q}_i + \left\{\frac{1}{2}\dot{G}_i + S_i\right\}\dot{q}_i + c_i\dot{q}_i + \Delta f_i J_i^T\mathbf{n}_i(\theta) \\ &\quad + \Delta\lambda_i\{J_i^T\mathbf{e}_i(\theta) + (-1)^i r_i\mathbf{p}_i\} \\ &\quad + r_i\{(-1)^i\lambda_{id} + \widehat{N}_i\}\mathbf{p}_i = 0, \quad i = 1, 2. \end{aligned} \tag{103}$$

Similarly, to the form of (84), these equations can be written in the following way:

$$\begin{aligned} &G(\mathbf{X})\ddot{\mathbf{X}} + \left\{\frac{1}{2}\dot{G} + S + C\right\}\dot{\mathbf{X}} + \frac{\partial\Phi}{\partial\mathbf{X}}\Delta\boldsymbol{\lambda} \\ &\quad + S_N\mathbf{b}_\theta + \sum_{i=1,2}\{\widehat{N}_i + (-1)^i\lambda_{id}\}\mathbf{b}_i = 0, \end{aligned} \tag{104}$$

where

$$\begin{aligned} \Delta\boldsymbol{\lambda} &= (f_1 - f_{1d}, f_2 - f_{2d}, \lambda_1 - \lambda_{1d}, \lambda_2 - \lambda_{2d})^T, \\ \mathbf{b}_\theta &= (0, 0, 1, 0, 0, 0, 0, 0)^T, \\ \mathbf{b}_1 &= (0, 0, 0, 1, 1, 1, 0, 0)^T, \\ \mathbf{b}_2 &= (0, 0, 0, 0, 0, 0, 1, 1)^T. \end{aligned} \tag{105}$$

At this stage, it is important to note that in accordance with four constraints $\Phi = 0$, the velocity vector $\dot{\mathbf{X}}$ belongs to the kernel space of $(\partial\Phi/\partial\mathbf{X})^T$ and, therefore, $\dot{\mathbf{X}}^T\partial\Phi/\partial\mathbf{X} = 0$. Further by using (100) and taking inner product of (84) and $\dot{\mathbf{X}}$, we obtain

$$\begin{aligned} &\frac{\mathrm{d}}{\mathrm{d}t}\left\{K + \frac{f_d}{2(r_1 + r_2)}\{(x_{01} - x_{02})^2 + (y_{01} - y_{02})^2\}\right. \\ &\quad \left. + \sum_{i=1,2}\frac{\gamma_i}{2}\widehat{N}_i^2\right\} = -\sum_{i=1,2}c_i\|\dot{q}_i\|^2, \end{aligned} \tag{106}$$

where K denotes the system's kinetic energy defined by

$$K = \sum_{i=1,2} \frac{1}{2}\dot{q}_i^T G_i(q_i)\dot{q}_i + \frac{M}{2}(\dot{x}^2 + \dot{y}^2) + \frac{I}{2}\dot{\theta}^2. \tag{107}$$

The relation of (106) must be equivalently derived by taking inner product of $\ddot{\mathbf{X}}$ and the closed loop dynamics of equation (104). To verify this, let us define

$$p_1 = q_{11} + q_{12} + q_{13} = \mathbf{p}_1^T q_1, \qquad p_2 = q_{21} + q_{22} = \mathbf{p}_2^T q_2, \tag{108}$$

$$P = \frac{f_d}{2(r_1 + r_2)}\{l^2(\mathbf{s}, Y_1, Y_2) + d^2(\mathbf{s}, Y_1, Y_2)\} + \sum_{i=1,2} \frac{\gamma_i}{2}\widehat{N}_i^2, \tag{109}$$

where l and s are defined in (95). It should be remarked that, with the aid of expressions of integral form of rolling constraints shown in (71), we have

$$\begin{aligned} \frac{\partial l}{\partial \theta} &= -\frac{\partial Y_1}{\partial \theta}\sin\theta_1 + \frac{\partial Y_2}{\partial \theta}\sin\theta_2 \\ &= -r_1\sin\theta_1 - r_2\sin\theta_2, \\ \frac{\partial d}{\partial \theta} &= r_1\cos\theta_1 + r_2\cos\theta_2, \end{aligned} \tag{110}$$

and hence,

$$\begin{aligned} \frac{\partial P}{\partial \theta} &= \frac{f_d}{r_1 + r_2}\left\{l\frac{\partial l}{\partial \theta} + d\frac{\partial d}{\partial \theta}\right\} \\ &= \frac{-f_d}{r_1 + r_2}\{l(r_1\sin\theta_1 + r_2\sin\theta_2) \\ &\qquad - d(r_1\cos\theta_1 + r_2\cos\theta_2)\} \\ &= S_N. \end{aligned} \tag{111}$$

Similarly, from (66), (69), and (101), we have

$$\begin{aligned} \frac{\partial P}{\partial p_i} &= \frac{f_d}{r_1 + r_2}\left\{l\frac{\partial l}{\partial p_i} + d\frac{\partial d}{\partial p_i}\right\} + \gamma_i\widehat{N}_i\frac{\partial \widehat{N}_i}{\partial p_i} \\ &= (-1)^i\frac{f_d}{r_1 + r_2}\left\{l\frac{\partial Y_i}{\partial p_i}\sin\theta_i - d\frac{\partial Y_i}{\partial p_i}\cos\theta_i\right\} + \gamma_i\widehat{N}_i\frac{\partial \widehat{N}_i}{\partial p_i} \\ &= \frac{-r_i f_d}{r_1 + r_2}\{l\sin\theta_i - d\cos\theta_i\} + r_i\widehat{N}_i \\ &= (-1)^i r_i\lambda_{id} + r_i\widehat{N}_i, \quad i = 1, 2. \end{aligned} \tag{112}$$

Thus, the inner product of $\dot{\mathbf{X}}$ and (104) or the relation of (106) is reduced to

$$\frac{\mathrm{d}}{\mathrm{d}t}\{K + P\} = -\sum_{i=1,2} c_i\|\dot{q}_i\|^2. \tag{113}$$

In other words, the closed loop dynamics of (104) can be expressed in the form

$$G(\mathbf{X})\ddot{\mathbf{X}} + \left\{\frac{1}{2}\dot{G} + S + C\right\}\dot{\mathbf{X}} + \frac{\partial P}{\partial \mathbf{X}} + \frac{\partial \Phi}{\partial \mathbf{X}}\Delta\lambda = 0. \tag{114}$$

This is interpreted as a Lagrange equation of the Lagrangian

$$L = K - P - \Phi\Delta\boldsymbol{\lambda}, \tag{115}$$

in accompany with the external damping torques $c_i\dot{q}_i$ for $i = 1, 2$ through finger joints. The scalar function P defined by (109) is a quadratic function of Y_1, Y_2, p_1, and p_2, and hence, it is regarded as a quadratic function of θ, p_1, and p_2 since Y_i can be regarded as a linear function of θ and p_i for $i = 1, 2$ because of (71). Hence, P can be regarded as a Morse function defined on the Riemannian submanifold induced by two constraints described by $Q_i = 0$ for $i = 1, 2$ and four constraints in the tangent space described by $\dot{Q}_i$ and $\dot{R}_i = 0$ for $i = 1, 2$.

9. Physical Insights into Gradient and Hessian of the Morse Function

The physical meaning of control signals for blind grasping defined by (100) is quite simple. The first term of the right-hand side of (100) plays a role of damping for rotational motion of finger joints. Damping for motion of the object is exerted from velocity constraints $\dot{Q}_i = 0$ and $\dot{R}_i = 0$ for $i = 1, 2$ as discussed in detail in the previous paper [1]. The second term plays a role of fingers-thumb opposition that induces minimization of the distance between O_{01} and O_{02}, centers of finger-end spheres. The distance is equivalent to $\sqrt{l^2 + d^2}$ as discussed in Section 5. The third term plays an important role in suppressing excess movements of rotation of finger joints. These characteristics of the control signal condense into the Lagrange equation of motion with (1) the potential $P(\mathbf{s}, \theta, p_1, p_2)$ of (109), (2) the lifting $(\partial\Phi/\partial\mathbf{X})\boldsymbol{\lambda}_d$, where $\boldsymbol{\lambda}_d = (f_{1d}, f_{2d}, \lambda_{1d}, \lambda_{2d})^T$, and (3) the gradient $\partial P/\partial\mathbf{X}$ of the potential. In other words, (113) implies that if the artificial potential P attains its minimum and, at the same time, makes the gradient $\partial P/\partial\mathbf{X}$ vanish at some $\mathbf{s} = \mathbf{s}^*$ ($\mathbf{s} = (s_1, s_2)^T$), and, moreover, the artificial potential is positive definite in $\mathbf{X}$ under the two holonomic constraints, then the equilibrium position that minimizes P would be asymptotically stable. Unfortunately, P is a quadratic function with respect to only θ, p_1, and p_2, and, therefore, P is only nonnegative definite in $\mathbf{X}$. Nevertheless, it is possible to show that the Hessian matrix of P with respect to θ, p_1, and p_2 becomes positive definite in these three variables as shown in Table 1 that is calculated by partially differentiating the gradients $\partial P/\partial\theta$, $\partial P/\partial p_1$, and $\partial P/\partial p_2$ of (111) to (112) with respect to θ, p_1, and p_2 again. Apparently, the Hessian becomes positive definite provided that γ_i is chosen as being of similar order of (r_i/f_d), and $\theta_i(s_i)$ remains in a region such that $|\theta_i(s_i)| < \pi/6$ for $i = 1, 2$. Then, by using a similar argument used in proving the stability on a submanifold for DOF redundant systems [9, 13], a solution trajectory to the Lagrange equation converges exponentially to the constraint equilibrium manifold. In this paper, we omit the details of the argument, but show a physical meaning of the gradient $\partial P/\theta$ together with $\partial P/\partial p_i$ ($i = 1, 2$).

As shown in Figure 9, all rotational motions of the object emerge around axes that are perpendicular to the xy-plane. Here, we consider the rotational moment that may emerge

Table 1: Hessian matrix of the potential P.

$\dfrac{\partial^2 P}{\partial\theta^2} = \dfrac{\partial S_N}{\partial\theta} = \dfrac{f_d}{r_1+r_2}\left\{\dfrac{\partial l}{\partial\theta}(r_1\sin\theta_1 + r_2\sin\theta_2) - \dfrac{\partial d}{\partial\theta}(r_1\cos\theta_1 + r_2\cos\theta_2)\right\}$ $= \dfrac{f_d}{r_1+r_2}\{(r_1\sin\theta_1 + r_2\sin\theta_2)^2 + (r_1\cos\theta_1 + r_2\cos\theta_2)^2\}$ $= \dfrac{f_d}{r_1+r_2}\{r_1^2 + r_2^2 + 2r_1r_2\cos(\theta_1-\theta_2)\},$
$\dfrac{\partial^2 P}{\partial p_i^2} = r_i^2\left\{\dfrac{f_d}{r_1+r_2} + \dfrac{1}{\gamma_i}\right\}, \quad i = 1,2,$
$\dfrac{\partial^2 P}{\partial p_i\partial\theta} = -\dfrac{f_d}{r_1+r_2}\{r_i^2 + r_1r_2\cos(\theta_1-\theta_2)\}, \quad i = 1,2,$
$\dfrac{\partial^2 P}{\partial p_2\partial p_1} = -\dfrac{r_1r_2f_d}{r_1+r_2}\cos(\theta_1-\theta_2).$

at the contact point P_2 exerted by the pressing force $\mathbf{f}_1$ to the object from the other contact point P_1. Another force $\mathbf{f}_2$ at P_2 that presses the object generates the torque around the z-axis at P_1. The sum of these torques around the z-axis can be expressed as

$$\begin{aligned}
&\mathbf{r}_1\times\mathbf{f}_1 + \mathbf{r}_2\times\mathbf{f}_2\\
&\quad= \overrightarrow{P_1P_2}\times\frac{r_1f_d}{r_1+r_2}\mathbf{n}_1 + \overrightarrow{P_2P_1}\times\frac{r_2f_d}{r_1+r_2}\mathbf{n}_2\\
&\quad= \begin{pmatrix} X(s_1)-X(s_2)\\ Y(s_1)-Y(s_2)\\ 0\end{pmatrix}\times\frac{r_1f_d}{r_1+r_2}\begin{pmatrix}\cos\theta_1\\ -\sin\theta_1\\ 0\end{pmatrix}\\
&\qquad+\begin{pmatrix} X(s_2)-X(s_1)\\ Y(s_2)-Y(s_1)\\ 0\end{pmatrix}\times\frac{r_2f_d}{r_1+r_2}\begin{pmatrix}-\cos\theta_2\\ \sin\theta_2\\ 0\end{pmatrix}\\
&\quad= \frac{f_d}{r_1+r_2}\begin{pmatrix} 0\\ 0\\ -(X_1-X_2)(r_1\sin\theta_1 + r_2\sin\theta_2)\\ -(Y_1-Y_2)(r_1\cos\theta_1 + r_2\cos\theta_2)\end{pmatrix},
\end{aligned}\tag{116}$$

where we denote $X_i = X(s_i)$ and $Y_i = Y(s_i)$ for abbreviation. We see also that from geometric relations of the vectors $\overrightarrow{O_mP_i}$, and quantities Y_i and l_{ni} expressed in local coordinates O_m-XY (see Figure 9), it follows that

$$\begin{aligned}
\begin{pmatrix} l\\ -d\end{pmatrix} &= r_1\begin{pmatrix}\cos\theta_1\\ -\sin\theta_1\end{pmatrix} + r_2\begin{pmatrix}\cos\theta_2\\ -\sin\theta_2\end{pmatrix}\\
&\quad+ R_{\theta1}\begin{pmatrix} l_{n1}\\ -Y_1\end{pmatrix} + R_{\theta2}\begin{pmatrix} l_{n2}\\ -Y_2\end{pmatrix}\\
&= r_1\begin{pmatrix}\cos\theta_1\\ -\sin\theta_1\end{pmatrix} + r_2\begin{pmatrix}\cos\theta_2\\ -\sin\theta_2\end{pmatrix}\\
&\quad- \begin{pmatrix} X(s_1)-X(s_2)\\ Y(s_1)-Y(s_2)\end{pmatrix}.
\end{aligned}\tag{117}$$

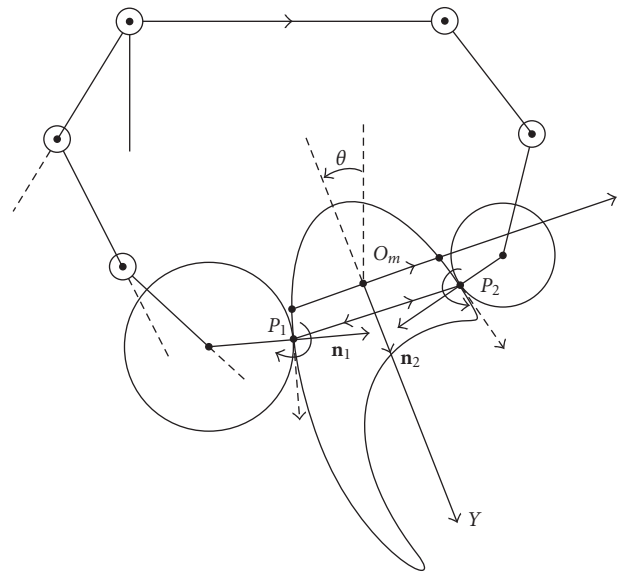

Figure 9: The pressing force to the object at P_1 in the direction n_1 induces a rotational moment around P_2 and vice versa.

Applying this relation to (116), we see that

$$\begin{aligned}
&\mathbf{r}_1\times\mathbf{f}_1 + \mathbf{r}_2\times\mathbf{f}_2\\
&\quad= \frac{f_d}{r_1+r_2}\left(0,0,l\sum_{i=1,2} r_i\sin\theta_i - d\sum_{i=1,2} r_i\cos\theta_i\right)^T\\
&\quad= (0,0,S_N)^T.
\end{aligned}\tag{118}$$

As a summary of the argument, it is possible to conclude that a solution trajectory to (114) converges asymptotically to some equilibrium state $\mathbf{X} = \mathbf{X}^*$ with some $\mathbf{s} = \mathbf{s}^*$ with $\partial P/\partial\mathbf{X} = 0$ at $\mathbf{X} = \mathbf{X}^*$ and $\mathbf{s} = \mathbf{s}^*$.

10. Conclusions

A natural extension of hybrid position/force control for robots with redundant degrees of freedom is presented from the standpoint of a Riemannian geometric approach. It is shown that any supply of the constant pressing force lying in the image space of the constraint gradient to the environment through joint actuations is not relevant to motions in the kernel space orthogonally compliment to the image space. An extension of problems of grasping and manipulation of rigid objects to the case of 2-dimensional objects with arbitrary shape is also treated from the viewpoint of Dirichlet-Lagrange's stability by introducing a nonnegative definite Morse-Lyapunov function on a Riemannian manifold together with damping shaping.

Appendices

A. A Proof of Stability

From exponential decay of $W_\alpha(t)$ as $t \to \infty$ shown in (61) and (58) and (59) (where α is set as $\alpha = 1/2\gamma_0$), it follows

that

$$\begin{aligned} E(t) &\le \frac{e^{-\gamma t}}{1-\alpha\gamma_0} W_\alpha(0) \\ &\le \frac{1+\alpha\gamma_0}{1-\alpha\gamma_0} e^{-\gamma t} E(0) \\ &= 3e^{-\gamma t} E(0). \end{aligned} \tag{A.1}$$

Hence, $\sqrt{E(t)}$ is also exponentially convergent to zero. Since $\dot{q}(t)$ is also exponentially convergent in t, $q(t)$ converges to some q^∞ that belongs to the equilibrium manifold EM_1. Along the trajectory, the Riemannian distance $L(q(0), q(T))$ must satisfy

$$L(q(0), q(T)) \le \int_0^T \sqrt{\dot{q}^T(t)\overline{G}(q(t))\dot{q}(t)}\,\mathrm{d}t, \tag{A.2}$$

and it is possible to suppose that $L(q(0), q(T))$ converges to $L(q(0), q^\infty)$ as $T \to \infty$. On the other hand, for any $T > 0$, it follows from (A.1) that

$$\begin{aligned} \int_0^T \sqrt{\dot{q}^T(t)\overline{G}(q(t))\dot{q}(t)}\,\mathrm{d}t &\le \int_0^T \sqrt{2E(t)}\,\mathrm{d}t \\ &\le \sqrt{6E(0)}\left(\frac{2}{\gamma}\right). \end{aligned} \tag{A.3}$$

Hence, substituting this into (A.2) yields

$$R(q(0), q(T)) \le \sqrt{6E(0)}\left(\frac{2}{\gamma}\right). \tag{A.4}$$

In particular, we have

$$L(q(0), q^\infty) = \sqrt{6E(0)}\left(\frac{2}{\gamma}\right). \tag{A.5}$$

Thus, it follows that

$$\begin{aligned} L(q^*, q(T)) &\le L(q(0), q(T)) + L(q(0), q^*) \\ &\le \sqrt{6E(0)}\left(\frac{2}{\gamma}\right) + L(q(0), q^*). \end{aligned} \tag{A.6}$$

First, we consider the case that at initial time $t = 0$ the angular velocity vector is zero, that is, $\dot{q}(0) = 0$. Then, since q^* in EM_1 and, therefore, $\mathbf{x}(q^*) = \mathbf{x}_d$ and $J(q)$ is nondegenerate in a local coordinate chart containing q^*, there exists a number $\delta_0(\varepsilon) > 0$ such that any $q(0)$ satisfying

$$L(q(0), q^*) < \delta_0(\varepsilon) \tag{A.7}$$

implies

$$\|\mathbf{x}(q(0)) - \mathbf{x}_d\| \frac{2\sqrt{3k}}{\gamma} \le \frac{\varepsilon}{2}. \tag{A.8}$$

Now, let us define

$$\delta(\varepsilon) = \min\left\{\frac{\varepsilon}{2}, \delta_0(\varepsilon)\right\}. \tag{A.9}$$

Then, for any $q(0)$ satisfying $L(q(0), q^*) < \varepsilon/2$, it follows from (A.6) and (A.8) that

$$L(q^*, q(T)) \le \frac{\varepsilon}{2} + L(q(0), q^*) < \varepsilon, \tag{A.10}$$

which completes the proof of stability of the reference point q^* on EM_1.

B. Integrability of Rolling Constraints

Suppose that the contact point P_1 on the left-hand finger end with the object contour moves along the finger end circle starting from the initial time $t = 0$ to the present time $t = t$ (Figure 6). The length of its movement can be expressed by

$$\begin{aligned} -\{s_1(t) - s_1(0)\} &= r_1\{\varphi_1(t) - \varphi_1(0)\} \\ &= r_1[\{\theta(t) + \theta_1(s_1(t)) - p_1(t)\} \\ &\quad - \{\theta(0) + \theta_1(s_1(0)) - p_1(0)\}], \end{aligned} \tag{B.1}$$

that is equivalent to the formula of (86). We show that $\psi_i(s_i)$ for $i = 1, 2$ can be chosen as

$$\psi_i(s_i) = (-1)^i\{l_{ei}(s_i) + s_i\}, \quad i = 1, 2. \tag{B.2}$$

In fact, let us define in accordance with (81) and (B.2)

$$R_i = r_i\{\theta + \theta_i(s_i) - p_i\} - (-1)^i\{Y_i - l_{ei}(s_i)\} + s_i \tag{B.3}$$

for $i = 1, 2$ and take the derivative of them in t. Then, it follows that

$$\begin{aligned} \frac{\mathrm{d}R_i}{\mathrm{d}t} &= r_i\{\dot{\theta} - \dot{p}_i\} - (-1)^i\left\{\frac{\partial Y_i}{\partial q_i^T}\dot{q}_i + \frac{\partial Y_i}{\partial \mathbf{x}^T}\dot{\mathbf{x}} + \frac{\partial Y_i}{\partial \theta}\dot{\theta}\right\} \\ &\quad + \frac{\partial\{r_i\theta_i - (-1)^i(Y_i - l_{ei})\}}{\partial s_i}\frac{\mathrm{d}s_i}{\mathrm{d}t} + \frac{\mathrm{d}s_i}{\mathrm{d}t}. \end{aligned} \tag{B.4}$$

Note that from the meanings of (64) to (69), it follows that

$$\begin{aligned} \frac{\partial l_{ei}}{\partial s_i} &= -(-1)^i\Big[\{X'(s_i)\sin\theta_i + Y'(s_i)\cos\theta_i\} \\ &\qquad + \{X(s_i)\cos\theta_i - Y(s_i)\sin\theta_i\}\frac{\partial\theta_i}{\partial s_i}\Big] \\ &= (-1)^i l_{ni}(s_i)\frac{\partial\theta_i}{\partial s_i} - (-1)^i, \\ \frac{\partial Y_i}{\partial s_i} &= (-1)^i\{(x_m - x_{0i})\cos(\theta + \theta_i) \\ &\qquad + (y_m - y_{0i})\sin(\theta + \theta_i)\}\frac{\partial\theta_i}{\partial s_i} \\ &= (-1)^i\{r_i + l_{ni}(s_i)\}\frac{\partial\theta_i}{\partial s_i}. \end{aligned} \tag{B.5}$$

Substituting these two equations into (B.4) and noticing equality (70), we have now shown that

$$\frac{\mathrm{d}R_i}{\mathrm{d}t} = 0, \quad i = 1, 2. \tag{B.6}$$

C. Frenet-Serret Form

It should be remarked that, instead of specifying $\theta_1(s_1)$ and $\theta_2(s_2)$ through (64), it is possible to use the moving coordinates frame called the Frenet frame defined by the pair of unit vectors $(\mathbf{e}_1(s), \mathbf{n}_1(s))$ expressed by local coordinates O_m-XY. Then, evolution of the frame $(\mathbf{e}_1(s), \mathbf{n}_1(s))$ along the curve length must be determined by the Frenet-Serret formula

$$\frac{\mathrm{d}}{\mathrm{d}s}(\mathbf{e}_1(s), \mathbf{n}_1(s)) = (\mathbf{e}_1(s), \mathbf{n}_1(s))\begin{pmatrix} 0 & -\kappa_1(s) \\ \kappa_1(s) & 0 \end{pmatrix}, \tag{C.1}$$

where $\kappa_1(s)$ denotes the curvature of the left-hand object contour at arc length s. On the other hand, these two unit vectors are expressed in terms of the inertial frame O-xy by the formula

$$\begin{aligned}\mathbf{n}_1(\theta) &= R_\theta \mathbf{n}_1(s)\\ &= (\mathbf{r}_X, \mathbf{r}_Y)\mathbf{n}_1(s)\\ &= \begin{pmatrix}\cos\theta & \sin\theta\\ -\sin\theta & \cos\theta\end{pmatrix}\begin{pmatrix}\cos\theta_1(s)\\ -\sin\theta_1(s)\end{pmatrix}\\ &= \begin{pmatrix}\cos(\theta+\theta_1)\\ -\sin(\theta+\theta_1),\end{pmatrix},\\ \mathbf{e}_1(\theta) &= R_\theta \mathbf{e}_1(s)\\ &= \begin{pmatrix}\sin(\theta+\theta_1)\\ \cos(\theta+\theta_1)\end{pmatrix},\end{aligned} \tag{C.2}$$

where $R_\theta \in SO(2)$ and it is subject to

$$\frac{\mathrm{d}}{\mathrm{d}t}R_\theta = R_\theta \begin{pmatrix}0 & \omega_z\\ -\omega_z & 0\end{pmatrix}, \tag{C.3}$$

where $\omega_z = \dot{\theta}$. Then, it is evident that

$$\begin{aligned} l_{n1}(s)\mathbf{n}_1(\theta) - l_{e1}(s)\mathbf{e}_1(\theta) &= \begin{pmatrix}x_m - x_1\\ y_m - y_1\end{pmatrix},\\ \begin{pmatrix}x_1\\ y_1\end{pmatrix} &= \begin{pmatrix}x_{01}\\ y_{01}\end{pmatrix} + r_1\mathbf{n}_1(s).\end{aligned} \tag{C.4}$$

From these equalities, it follows that

$$\begin{aligned} l_{n1}(s) &= \mathbf{n}_1^T(\theta)\begin{pmatrix}x_m - x_{01}\\ y_m - y_{01}\end{pmatrix} - r_1,\\ l_{e1}(s) &= -\mathbf{e}_1^T(\theta)\begin{pmatrix}x_m - x_{01}\\ y_m - y_{01}\end{pmatrix}\\ &= Y_1(t),\end{aligned} \tag{C.5}$$

which show equalities (66) and (68). Hence, (74) that expresses translational motion of the object can be written in the Frenet form

$$M\begin{pmatrix}\ddot{x}\\ \ddot{y}\end{pmatrix} - f_1\mathbf{n}_1(\theta) - \lambda_1\mathbf{e}_1(\theta) - f_2\mathbf{n}_2(\theta) - \lambda_2\mathbf{e}_2(\theta). \tag{C.6}$$

Note that at the right-hand contact point the Frenet form is defined by $(-\mathbf{e}_2(s), \mathbf{n}_2(s))$, and hence the Frenet-Serret formula is written as

$$\frac{\mathrm{d}}{\mathrm{d}s}(\mathbf{e}_2, -\mathbf{n}_2) = (\mathbf{e}_2, -\mathbf{n}_2)\begin{pmatrix}0 & -\kappa_2(s)\\ \kappa_2(s) & 0\end{pmatrix}. \tag{C.7}$$

References

[1] B. Sicilliano and O. Khatib, Eds., *Springer Handbook of Robotics*, Springer, New York, NY, USA, 2008.

[2] I. Chavel, *Riemannian Geometry: A Modern Introduction*, Cambridge University Press, Cambridge, UK, 1993.

[3] M. Sekimoto, S. Arimoto, S. Kawamura, and J.-H. Bae, "Skilled-motion planning of multi-body systems based upon Riemannian distance," in *Proceedings of IEEE International Conference on Robotics and Automation (ICRA '08)*, pp. 1233–1238, Pasadena, Calif, USA, May 2008.

[4] S. Arimoto, *Control Theory of Nonlinear Mechanical Systems: A Passivity-Based and Circuit-Theoretic Approach*, Oxford University Press, Oxford, UK, 1996.

[5] J. Jost, *Riemannian Geometry and Geometric Analysis*, Springer, Berlin, Germany, 2002.

[6] S. Gallot, D. Hulin, and J. Lafontaine, *Riemannian Geometry*, Springer, Berlin, Germany, 2004.

[7] N. H. McClamroch and D. Wang, "Linear feedback control of position and contact force for a nonlinear constrained mechanism," *Journal of Dynamic Systems, Measurement, and Control*, vol. 112, no. 4, pp. 640–645, 1990.

[8] D. Wang and N. H. McClamroch, "Position and force control for constrained manipulator motion: Lyapunov's direct method," *IEEE Transactions on Robotics and Automation*, vol. 9, no. 3, pp. 308–313, 1993.

[9] S. Arimoto, H. Hashiguchi, and R. Ozawa, "A simple control method coping with a kinematically ill-posed inverse problem of redundant robots: analysis in case of a handwriting robot," *Asian Journal of Control*, vol. 7, no. 2, pp. 112–123, 2005.

[10] A. M. Bloch, M. Reyhanoglu, and N. H. McClamroch, "Control and stabilization of nonholonomic dynamic systems," *IEEE Transactions on Automatic Control*, vol. 37, no. 11, pp. 1746–1757, 1992.

[11] G. Liu and Z. Li, "A unified geometric approach to modeling and control of constrained mechanical systems," *IEEE Transactions on Robotics and Automation*, vol. 18, no. 4, pp. 574–587, 2002.

[12] S. Arimoto, H. Hashiguchi, M. Sekimoto, and R. Ozawa, "Generation of natural motions for redundant multi-joint system: a differential-geometric approach based upon the principle of least actions," *Journal of Robotic Systems*, vol. 22, no. 11, pp. 583–605, 2005.

[13] S. Arimoto, "A differential-geometric approach for 2D and 3D object grasping and manipulation," *Annual Reviews in Control*, vol. 31, no. 2, pp. 189–209, 2007.

[14] L. D. Landau and E. M. Lifshitz, *Course of Theoretical Physics: Mechanics*, vol. 1, Butterworth-Heinemann, Oxford, UK, 3rd edition, 1982.

[15] A. D. Lewis, "Simple mechanical control systems with constraints," *IEEE Transactions on Automatic Control*, vol. 45, no. 8, pp. 1420–1436, 2000.

[16] W. M. Oliva, *Geometric Mechanics*, vol. 1798 of *Lecture Notes in Mathematics*, Springer, Berlin, Germany, 2002.