Hindawi
Mobile Information Systems
Volume 2019, Article ID 3286356, 11 pages
https://doi.org/10.1155/2019/3286356

Research Article

Fair and Efficient Rate Allocation for Wireless-Powered Machine-Type Communication Networks

Nanxing Liao,[1] Guopeng Zhang,[1] Jiansheng Qian,[2] Deqiang Cheng,[2] and Kun Yang[3]

[1]*School of Computer Science and Technology, China University of Mining and Technology, Xuzhou, China*
[2]*School of Information and Control Engineering, China University of Mining and Technology, Xuzhou, China*
[3]*School of Computer Science & Electronic Engineering, University of Essex, Colchester, UK*

Correspondence should be addressed to Guopeng Zhang; zgpcumt@163.com

Received 9 January 2019; Revised 3 April 2019; Accepted 18 April 2019; Published 26 June 2019

Academic Editor: Alessandro Bazzi

This paper proposes a bargaining game theoretic rate allocation scheme for wireless-powered machine-type communications (MTCs). In the considered body area MTC network (MTCN), a battery-powered user equipment (UE) acting as the MTC gateway (MTCG) is responsible for collecting the information uploaded by in/on body wireless-powered MTC devices (MTCDs). By solving the Nash bargaining solution (NBS) of the proposed cooperative game, the minimum rate requirements of the MTCDs are satisfied. In addition, the network resource can be allocated to the MTCDs in a *fair* and *efficient* manner regarding the difference of their channel qualities. In comparison to other traditional resource allocation methods, the simulation results show that the proposed NBS-based method obtains a good tradeoff between the system *efficiency* and per-node *fairness*.

1. Introduction

Machine-to-machine (M2M) communication is a way of enabling networked devices to exchange information without the assistance of humans. It belongs to an Internet-of-things (IoT) technology. Wireless M2M communication is also referred to as machine-type communication (MTC) in 3GPP LTE-A specifications [1], which has been widely used in smart city, smart grid, wearable networks, and vehicle interconnection. Nowadays, due to the increase of aging population, interests in healthcare monitoring system based on MTC have also grown considerably [2]. Medical devices carried in/on a human body can detect medical events and enable continuous monitoring of patient health remotely during their daily activities [3]. Despite the technological progress, several major challenges should be dealt with in order to support MTC in mobile networks.

Firstly, MTC includes a large number of MTC devices (MTCDs) which carry common service features of small data transmission with strict real-time constraints. Connecting these MTCDs directly to base stations (BSs) will lead to an unreasonably low ratio between data payload and required control information [4]. In addition, as in wireless sensor networks (WSNs), battery recharge or replacement is not always feasible for MTCDs [5]. For example, MTCDs deployed in/on a human body for medical care may include wearable and implantable devices. Battery replacement might damage the network and even jeopardize the patient's health, but increasing battery capacity is not feasible for such a network, since it would lead to an increase in device dimension and weight.

Regarding the first issue, a new network element termed as MTC gateway (MTCG) is ordered to be deployed in LTE-A cellular networks [6]. It is used to collect information from a group of MTCDs and forward the information to a BS. An MTCG could be a network infrastructure or a normal user equipment (UE). The data link from an MTCG to a BS is based on LTE-A specifications, while the links from an MTCD to an MTCG can either be via Wi-Fi, Bluetooth, or other short range wireless communication protocols. This leads to a hierarchical network structure for utilizing the cellular spectrum more efficiently [7].

As far as the second issue is concerned, the recent technology termed as wireless power transfer (WPT) has

been proposed for effective energy provision over middle or short range [8, 9]. Three main WPT methods are magnetic resonance, magnetic induction, and radio frequency (RF) energy harvesting. Magnetic induction is the most popular WPT method because it is easy to implement. Most modern cellphones aim to be compliant with the magnetic induction standard, Qi [10]. However, it does not have the best user experience, as the Qi device and charging table must be precisely aligned. Magnetic resonance offers an improved user experience as it does not require receiver and transmitter alignment, but it can only send power to a device from at most an inch away [10]. In comparison to these two methods, RF energy harvesting receivers can power devices up to 40 feet from the energy transmitter [11], and the receiver and transmitter do not even need line-of-sight to transfer power. The challenge with RF energy harvesting is that the amount of power that can be transferred is limited. Thus, it is best suited to power wireless sensors and small devices of IoT.

This paper takes wireless wearable network as an example system of MTC network. As shown in Figure 1, the network is deployed in a hospital environment for reliable and real-time health monitoring [12, 13]. Based on the above analysis, we assumed that the RF energy harvesting technology is adopted by the system. Dedicated power beacons (PBs) which can radiate RF energy continuously are preinstalled in the hospital ward, and MTCDs combined with rechargeable storage devices (e.g., supercapacitors) can thus harvest energy from the PBs.

It is noted that RF signals can carry energy as well as information at the same time, which is referred to as simultaneous information and power transfer (SWIPT) in literatures [14]. In addition, RF energy sources are inexhaustible but unreliable. These two features change the network designers' options considerably. In order to ensure that MTCDs will always have enough energy to operate, the time switching between the wireless power transfer and wireless information transfer (WIT) should be carefully designed. In [12], the performance of the WPT-enabled wearable networks is investigated from the system point of view. The MTCDs are assumed to be distributed in a hospital environment according a Poisson cluster process. Each MTCD transmits its messages to an MTCG, and the MTCG can then notify the nearest medical personnel. Based on this operation mode, the probability of correct notification for a clustered network is provided in close form. In [13], the authors studied a dense WPT-enabled wireless sensor network. By examining two different communication scenarios (i.e., the direct communication scenario and the cooperative relay scenario) for data exchange, the theoretical expressions for the probability of successful communication are provided. In contrast to [12, 13], another point of view is to concern with the individual performance of each MTCD in a network. In [15], the authors propose a maxi*mum-rate* method to maximize the *sum rate* of a group of users given a total time constraint. Since the BS has integrated the functions of PB and MTCG, the *maximum-rate* method can jointly optimize the time allocation for the WPT links (from the BS to the users) and the WIT links (from the users to the BS). It is also

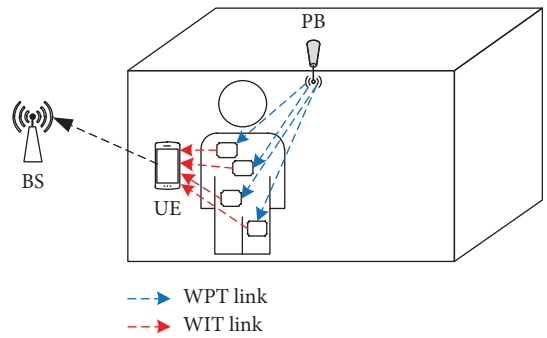

Figure 1: The considered WP-MTCN model.

indicted in [15] that the *maximum-rate* method bears the notably *unfairness* problem, termed as the "doubly near-far problem," as more transmission time and rate are allocated to the users close to the BS than the users far from the BS. To address the *unfairness* problem, the authors further proposed in [15] the *common-rate* method which can assign all users equal rates in the WIT phase, regardless of their distances to the BS. Additionally, the authors in [16] proposed the *common-energy* method which can equalize the average energy harvested by the users in the WPT phase. However, both the *common-rate* and *common-energy* methods protect users with worse channel conditions, but penalize users with better channel conditions; thus, the *system efficiency* is greatly deteriorated. Besides, both the approaches are not easy to take into account the notion that different MTCDs might require different levels of quality of service (QoS), which can be defined in terms of delay, data rate, or packet loss [17]. The authors in [18] extended the single RF source model to a more complex scenario with multiple RF sources. The fair and efficient issue is address by using the marginal utility theory not the cooperative game theory adopted in this paper. Therefore, the authors did not address the QoS satisfaction issue of the user devices.

Different from the above works, this paper addresses the *fairness* and *efficiency* issue of resource allocation in a joint manner. Particularly, the resource allocation problem for a group of MTCDs is modeled as an optimization problem from the perspective of cooperative game theory [19]. Considering different MTCDs may require different level of QoS (defined as the minimum transmission rate), the goal of the proposed game problem is to maximize the *sum rate* of all the MTCDs while fulfilling their minimum rate demands. Although there are many kinds of solution methods for a cooperative game, we select the Nash bargaining solution (NBS) [19] as it provides a Pareto optimal resource allocation for game players. By solving the NBS of the game problem, the desired *fair* and *efficient* properties can be finally obtained. The major contributions of this paper are as follows:

(1) A frame structure over time-and-spectrum domain is proposed for SWIPT. This is necessary to analyze the resource allocation problem in a hierarchical SWIPT network.

(2) The utility function for a MTCD is defined based on the achievable data rate. This makes the formulated cooperative game problem be with a clear physical meaning.

(3) By solving the NBS of the proposed game problem, the optimal duty time for the WPT and WIT links is jointly found in close form. As a result, the communication and energy resource are allocated to a group of MTCDs fairly and efficiently in the Pareto optimal sense. It means that after the minimum rate demands of all the MTCDs are satisfied, the remaining resource can be allocated to the MTCDs according to their channel conditions.

The rest of this paper is organized as follows. Section 2 introduces the considered system model. Section 3 formulates the resource allocation problem as a cooperative game. Section 4 solves the game problem in close form. Section 5 provides the simulation results. Section 6 concludes the paper.

2. System Model

The considered wireless-powered MTCN is deployed in a 3D room space as shown in Figure 1. A set $\mathbb{K}$ of K MTCDs is implanted on/in a human body, thus constituting a healthcare monitoring system. The MTCDs can sense vital signs (e.g., body temperature, heart rate, blood pressure, and ECG and EEG signals) of the human body. The sensing information is firstly transmitted to the UE which serves as the gateway for the MTCN. Then, the UE forwards the collected information to the core network via the BS. The information is finally conveyed to the healthcare system database for analysis. A low-cost PB is also installed on the ceiling of the room, which is capable of wirelessly broadcasting energy. In this paper, we assume that the MTCDs are battery-less but can harvest the energy broadcasted by the PB, while the UE is equipped with a rechargeable battery as it can be conveniently removed and charged. Therefore, only the energy consumption of the MTCDs is concerned. In addition, we also assume that the PB is with the single antenna setting. Although deploying multiple antennas at an energy transmitter [20] can improve the efficiency of wireless power transfer (note that it is difficult to deploy multiple antennas at an energy receiver due to the limited size of an on/in-body device.), this paper does not adopt this technology because the paper focuses on scheduling the duty time for the WPT phase and the WIT phase in SWIPT, so the WPT efficiency improvement (resulted from adopting multiple antenna or other techniques) does not affect the resource allocation result. In order to facilitate the sequel analysis, the following assumptions are also made:

(1) The cellular uplink (from the UE to the BS) operates in the LTE-A bands, while the WPT links (from the PB to the MTCDs) and the WIT links (from the MTCDs to the UE) operate in the ISM bands.

(2) In order to prevent mutual interference, the WPT and WIT links work on a strict time division multiplexing (TDM) as shown in Figure 2. Denote the duration of each time block by T. The first τ_0 $(0 < \tau_0 < 1)$ time in a block is assigned to the WPT link while the remaining $1 - \tau_0$ time can then be assigned to the WIT links. During the $1 - \tau_0$ time, the K MTCDs can transmit their information independently to the UE by using time division multiple access (TDMA).

This paper only studies the resource allocation problem among the WPT and the WIT links. For easy analysis, the unit block time, T, is normalized to 1. Denote the transmission time assigned to the ith $(\forall i \in \mathbb{K})$ MTCD in a block by τ_i $(0 \leq \tau_i \leq 1 - \tau_0)$. The following time constraint should be satisfied in the resource allocation:

$$\tau_0 + \sum_{i=1}^{K} \tau_i = 1. \tag{1}$$

Assume both the WPT and the WIT links are with quasistatic flat-fading channels. Denote the channel power gain from the PB to the ith MTCD by $g_{\mathrm{PB},i}$ and from the ith MTCD to the UE by $g_{i,\mathrm{UE}}$. Hence, $g_{\mathrm{PB},i}$ and $g_{i,\mathrm{UE}}$ for $\forall i \in \mathbb{K}$ remain constant during one block but can vary from one block to another. In addition, we also assume that the MTCDs adopt the *harvest-then-transmit* (HT) protocol as in [14–16], and the average power harvested at the end of the energy harvesting (EH) circuitry is a linear function of the average input power. Denote the transmission power at the PB in the WPT phase by P_{PB}. The amount of energy harvested by the ith MTCD can be given by

$$E_i = \xi_i P_{\mathrm{PB}} g_{\mathrm{PB},i} \tau_0, \quad \forall i \in \mathbb{K}, \tag{2}$$

where ξ_i $(0 < \xi_i < 1)$ is the EH efficiency at the receiver of the ith MTCD. It is noted that recent works [21, 22] show that the usage of linear model may not properly model the power dependent EH efficiency, but this ideal model can well reveal the mechanism of the proposed cooperative game theoretic approach on resource allocation. It is left for our future work to select a suitable nonlinear power conversion model and obtain the optimum performance of an SWIPT system.

In the WPT phase, the MTCDs replenish their energy. In the subsequent WIT phase, the MTCDs can transmit their information to the UE in the allocated time period. As in [14–16], we assume that the ith MTCD uses a fixed portion α_i $(0 < \alpha_i < 1)$ of the harvested energy for WIT. The average transmission power at the ith MTCD can be given by

$$P_i = \frac{\alpha_i E_i}{\tau_i}, \quad \forall i \in \mathbb{K}. \tag{3}$$

Denote the noise power at the receiver of the UE by σ^2. Using equations (2) and (3), we can calculate the achievable data rate of the ith MTCD by

$$f(\tau_0, \tau_i) = \tau_i \log_2\left(1 + A_i \cdot \frac{\tau_0}{\tau_i}\right), \quad \forall i \in \mathbb{K}, \tag{4}$$

where $A_i = \alpha_i \xi_i P_{\mathrm{PB}} g_{\mathrm{PB},i} g_{i,\mathrm{UE}} / \sigma^2$ is a constant during the resource allocation in one block. From equation (4), we note that the parameters τ_0 and τ_i $(\forall i \in \mathbb{K})$ should be jointly

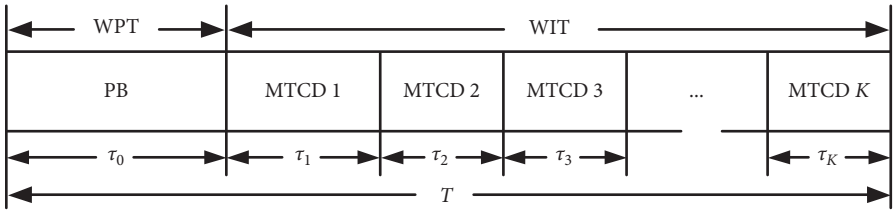

Figure 2: The time allocation pattern for the WPT and WIT phases.

optimized and thus can lead to a fairness rate allocation among the MTCDs.

3. Problem Formulation

It has been shown in [15, 16] that the *unfairness* problem of resource allocation is resulted from the large difference of the distance from the end users to the BS. Although the MTCDs installed in/on the human body have almost the same distance to the PB as well as to the UE, clothes on body, human tissues, and human posture changes can cause significant signal attenuation with shadowing duration of 80 ms [23]. The different shadowing for the WPT and the WIT links may incur the *unfairness* problem again, as it is an inherent problem with respect to the channel quality.

In this paper, we assume that different MTCDs are associated with different applications. The QoS demand of the ith MTCD is defined as its minimum rate requirement, which is denoted by $R_i^{\min}$ ($R_i^{\min} \geq 0$). The major concern is how to *fairly* allocate the transmission rate among the MTCDs (i.e., satisfy their minimum rate requirements) while maximizing their *sum rate*. To this end, we use the NBS method borrowed from the cooperative game theory [5].

3.1. Basic Concepts and Theorems of Cooperative Game Theory. The cooperative game theory can be described as follows [19]. Let $\mathbb{K} = \{1, 2, \ldots, K\}$ be the set of K players. Let Ω be a closed and convex subset of $\mathbb{R}^K$ to represent the set of feasible payoff allocations that the players can get if they all work cooperatively. Let $R_i^{\min}$ be the minimal payoff that the ith player would expect; otherwise, the player will not cooperate. Let $\mathbf{R} = (R_1, R_2, \ldots, R_K)$ and $\mathbf{R}^{\min} = (R_1^{\min}, R_2^{\min}, \ldots, R_K^{\min})$. Suppose $\{\mathbf{R} \in \Omega \mid R_i \geq R_i^{\min}, \forall i \in \mathbb{K}\}$ is a nonempty bounded set. The pair $(\mathbb{K}, \mathbf{R}^{\min})$ is called a K-person cooperative game. Within the feasible set Ω, the notion of *Pareto optimal* as a selection criterion for the game solutions can be formally defined as follows.

Definition 1. The point $\mathbf{R} = (R_1, R_2, \ldots, R_K)$ is said to be *Pareto optimal*, if and only if there is no other allocation $\mathbf{R}' = (R_1', R_2', \ldots, R_K')$ such that $R_i' \geq R_i$ for $\forall i \in \mathbb{K}$ and $R_i' \geq R_i$, $\exists i \in \mathbb{K}$.

The solution of a cooperative game can be obtained by several methods, e.g., Nash bargaining solution (*NBS*) [20] and Raiffa–Kalai–Smorodinsky bargaining solution (*RBS*). Among them, *NBS* provides a unique and *Pareto optimal* operation point, which encapsulates the requirement of yielding *Pareto optimal* in a payoff sense. Besides, the *NBS* should satisfy other five axioms, i.e., individual rationality, feasibility, independence of irrelevant alternatives, independence of linear transformations, and symmetry. The detailed explanation for these axioms can be found in [19]. The following theorem shows that there is exactly one *NBS* that satisfies the above axioms [19].

Theorem 1. *(existence and uniqueness of NBS). Let the payoff functions R_i, $\forall i \in \mathbb{K}$ be convex, upper-bounded defined on Ω. Let $\mathbb{K}$ be the set of indices of users who are able to achieve a performance strictly superior to their minimal payoff. Then, there exists a unique NBS that verifies $\{\mathbf{R} = (R_1, R_2, \ldots, R_K) \in \Omega \mid R_i \geq R_i^{\min}, \forall i \in \mathbb{K}\}$ by solving the unique solution of the maximization problem:*

$$\underset{\mathbf{R}\in\Omega, R_i \geq R_i^{\min}, \forall i \in \mathbb{K}}{\operatorname{argmax}} \prod_{i=1}^{K} \left(R_i - R_i^{\min}\right). \tag{5}$$

3.2. Resource Allocation Game Formulation. Based on the cooperative game theory [19], the resource allocation for the considered SWIPT system can be formulated as the following optimization problem:

$$\max Q \quad Q = \sum_{i=1}^{K} \ln\left(R_i - R_i^{\min}\right), \tag{6}$$

$$\text{s.t.} \quad \tau_0 + \sum_{i=1}^{K} \tau_i \leq 1, \quad \forall i \in \mathbb{K}, \tag{6.1}$$

$$R_i \leq f\left(\tau_0, \tau_i\right), \tag{6.2}$$

$$R_i - R_i^{\min} \geq 0, \quad \forall i \in \mathbb{K}. \tag{6.3}$$

It is noted that the standard objective function of the cooperative game problem (6) was to be $\overline{Q} = \prod_{i=1}^{K} (R_i - R_i^{\min})$ [24]. Since $\overline{Q}$ is nonconcave, we thus transform $\overline{Q}$ as a concave function by taking advantage of the strictly increasing property of $\ln(\cdot)$ function.

The objective of the cooperative game problem (6) is to achieve a Pareto optimal rate allocation among the MTCDs. In detail, the set of K MTCDs can be taken as the bargainers in a rate allocation game. $(R_1^{\min}, \ldots, R_K^{\min})$ and $(R_1, \ldots, R_K)$ consist of the disagreement point and an agreement point for the bargainers, respectively. The goal of the cooperative game problem (6) is to find a feasible agreement $(R_1^*, \ldots, R_K^*)$; thus, $R_i^* \geq R_i^{\min}$ for $\forall i \in \mathbb{K}$, and there is no other rate allocation $(R_1', \ldots, R_K')$ which can lead to superior

performance for some MTCDs without causing performance deterioration for some other MTCDs. The property of the problem (6) is summarized in Proposition 1.

Proposition 1. *The optimization problem (6) is a convex optimization problem.*

Proof. It is noted that the objective function Q of the problem (6) is a strictly concave function. The constraints (6.1) and (6.2) are linear functions and thus are convex. Next, we can just focus on the property of the constraint (6.3).

To verify that the constraint (6.3) is convex, we first transform the constraint (6.3) as

$$x_i = R_i - f(\tau_0, \tau_i) \le 0. \tag{7}$$

Let $x_i = x_{i,1} + x_{i,2}$, where $x_{i,1} = R_i$ and $x_{i,2} = -f(\tau_0, \tau_i)$. We note that x_i is the sum of a linear function $x_{i,1}$ which is convex, and a nonlinear function $x_{i,2}$. If $x_{i,1}$ and $x_{i,2}$ are both convex functions, so is their sum x_i. Hence, we just need to verify that for $\forall i \in \mathbb{K}$, $x_{i,2}$ is a convex function over (τ_0, τ_i).

From [24], we know that if the Hessian matrix of $x_{i,2}$ is positive semidefinite, $x_{i,2}$ is a convex function. The Hessian matrix of $x_{i,2}$ can be given by

$$\nabla^2 x_{i,2} = \left(d_{m,n}^{(i)}\right), \quad 0 \le m, n \le K, \ \forall i \in \mathbb{K}, \tag{8}$$

where m and n represents the row and the column of the matrix, respectively. Let $B_i = 1 + A_i \cdot \tau_0/\tau_i$; the diagonal entries and the off-diagonal entries of $\nabla^2 x_{i,2}$ can be given by

$$d_{m,n}^{(i)} = \begin{cases} \dfrac{A_i^2 \tau_i^{-1} B_i^{-2}}{\ln 2}, & m = 0, \\[2ex] \dfrac{A_i^2 \tau_i^{-3} B_i^{-2} \tau_0^{-2}}{\ln 2}, & m = i, \ m = n, \\[2ex] 0, & \text{otherwise}, \end{cases} \tag{9}$$

$$d_{m,n}^{(i)} = \begin{cases} \dfrac{-A_i^2 \tau_i^{-2} B_i^{-2} \tau_0}{\ln 2}, & m = 0, \ n = i, \\[2ex] 0, & \text{otherwise}, \end{cases}$$

respectively. In order to verify that $\nabla^2 x_{i,2}$ is a positive semidefinite matrix, we must show that for all real vectors $V^T = (v_0, v_1, v_2, \ldots, v_K) \ne 0$, $V^T \nabla^2 x_{i,2} V > 0$.

After some algebraic operation, we indeed have

$$\begin{aligned} V^T \nabla^2 x_{i,2} V &= \frac{1}{\ln 2}\left(v_0 \left(\frac{v_0 A_i^2}{B_i^2 \tau_i} - \frac{v_i A_i^2 \tau_0}{B_i^2 \tau_i^2} \right) \right. \\ &\quad \left. - v_i \left(\frac{v_0 A_i^2 \tau_0}{B_i^2 \tau_i^2} - \frac{\tau_0^2 A_i^2 v_i}{B_i^2 \tau_i^3} \right) \right) \\ &= \frac{1}{\ln 2} \frac{A_i^2}{B_i^2 \tau_i^3} (v_i \tau_0 - v_0 \tau_i)^2 \ge 0, \end{aligned} \tag{10}$$

which indicates that $\nabla^2 x_{i,2}$ is positive semidefinite.

We can then conclude that the objective function Q of the problem (6) is strictly concave and the constraint set (6.1)~(6.3) is convex. Problem (6) is a convex problem [24]. □

4. Optimization via Dual Decomposition

In this section, we try to solve the optimization problem (6) in close form. It is noted that the problem (6) satisfies Slater's condition. So, the optimal solution to the problem (6) can be recovered by solving its dual problem. In what follows, we give a detailed solution process by employing the dual decomposition method.

4.1. Dual Problem Formulation. In order to formulate the dual problem for the primal problem (6), we introduce the Lagrangian multipliers $\lambda \ge 0$ and $\mu = (\mu_0, \mu_1, \ldots, \mu_K) \ge 0$ to the constraints (6.1) and (6.2), respectively. The partial Lagrangian is expressed by

$$\begin{aligned} L(\mathbf{R}, \boldsymbol{\tau}, \lambda, \boldsymbol{\mu}) &= \sum_{i=1}^{K} \left(\ln\left(R_i - R_i^{\min}\right) - \mu_i R_i \right) \\ &\quad + \sum_{i=1}^{K} \left(\mu_i \tau_i \log_2 \left(\frac{1 + A_i \cdot \tau_0}{\tau_i} \right) - \lambda \tau_i \right) \\ &\quad + \lambda (1 - \tau_0), \end{aligned} \tag{11}$$

where $\mathbf{R} = (R_1, \ldots, R_K)$ and $\boldsymbol{\tau} = (\tau_0, \tau_1, \ldots, \tau_K)$ are the feasible rate allocation vector and time allocation vector for the problem (6), respectively. Then, the dual function is given by

$$g(\lambda, \boldsymbol{\mu}) = \max_{\mathbf{R}, \boldsymbol{\tau}} L(\mathbf{R}, \boldsymbol{\tau}, \lambda, \boldsymbol{\mu}). \tag{12}$$

The dual problem of the primal problem (6) can be formulated as

$$\min_{\lambda \ge 0, \boldsymbol{\mu} \ge 0} \ g(\lambda, \boldsymbol{\mu}), \tag{13}$$

$$\text{s.t.} \ \ R_i - R_i^{\min} \ge 0, \quad \forall i \in \mathbb{K}. \tag{13.1}$$

As the dual gap (i.e., the difference between the optimal solution to the primal problem (6) and that to the dual problem (13)) is zero [24]. The optimal solution to the primal problem (6) can be recovered by solving the dual problem (13).

4.2. Solution to the Dual Problem. It is noted that for a given $\overline{\lambda} \ge 0$ and $\overline{\boldsymbol{\mu}} = (\overline{\mu}_0, \overline{\mu}_1, \ldots, \overline{\mu}_K) \ge 0$, the Lagrangian (11) consists of two sets of variables, i.e., the rate allocation vector $\mathbf{R}$ and the time allocation vector $\boldsymbol{\tau}$. So, we can decompose the dual problem (13) into the following rate allocation problem:

$$\max_{\mathbf{R}} \; Q_1, Q_1 = \sum_{i=1}^{K}\left(\ln\left(R_i - R_i^{\min}\right) - \overline{\mu}_i R_i\right), \tag{14}$$

$$\text{s.t.} \;\; R_i - R_i^{\min} \geq 0, \quad \forall i \in \mathbb{K}, \tag{14.1}$$

and the time allocation problem

$$\max_{\boldsymbol{\tau}} Q_2 \;\; Q_2 = \sum_{i=1}^{K}\left(\overline{\mu}_i \tau_i \log_2\left(\frac{1 + A_i \cdot \tau_0}{\tau_i}\right) - \overline{\lambda}\tau_i\right) + \overline{\lambda}(1 - \tau_0). \tag{15}$$

By solving the problem (14), the optimal rate allocation vector $\mathbf{R}^* = (R_1^*, \ldots, R_K^*)$ can be easily obtained as

$$R_i^* = \left[\frac{1}{\overline{\mu}_i} + R_i^{\min}\right]_{R_i^{\min}}^{R_i^{\max}}, \quad \forall i \in \mathbb{K}, \tag{16}$$

where the function $[z]_b^a$ denotes the projection of z on $[a, b]$. In equation (16), $R_i^{\max}$ ($R_i^* \leq R_i^{\max}$ for $\forall i \in \mathbb{K}$) is introduced to limit the maximum rate that can be allocated to the ith MTCD. $R_i^{\max}$ is set as a constant and does not change the optimal solution to the primal problem (6) [25].

Now, we need to deal with the problem (15). By setting the first-order derivative of Q_2 with respect to τ_0 and $\tau_1, \ldots, \tau_K$ equal to zero, respectively, we can get

$$\sum_{i=1}^{K}\left(\overline{\mu}_i \frac{A_i}{1 + (A_i \cdot \tau_0/\tau_i)}\right) = \overline{\lambda}\ln 2, \tag{17}$$

$$\overline{\mu}_i \ln\left(1 + \frac{A_i \cdot \tau_0}{\tau_i}\right) - \overline{\mu}_i \frac{A_i/\tau_i}{1 + (A_i \cdot \tau_0/\tau_i)} = \overline{\lambda}\ln 2, \quad i \in \mathbb{K}. \tag{18}$$

From equation (17), we can derive

$$\frac{A_1}{\tau_1} = \frac{A_2}{\tau_2} = \cdots = \frac{A_K}{\tau_K} = C, \tag{19}$$

where C ($C > 0$) is a constant. By substituting equation (19) into equation (18), we can rewrite equation (18) as

$$y \ln y = y - (D + 1), \tag{20}$$

where $D = \sum_{i=1}^{N} \overline{\mu}_i A_i / \overline{\mu}_i$ is a constant and $y = 1 + C\tau_0$.

Then, by solving equation (20), we can get the optimal solution of τ_0 as

$$\tau_0^* = \frac{y^* - 1}{D + y^* - 1}. \tag{21}$$

It is noted that the optimal time allocation $\boldsymbol{\tau}^* = (\tau_0^*, \tau_1^*, \ldots, \tau_K^*)$ should satisfy the equality in the constraint (6.1). That means

$$\tau_0^* + \sum_{i=1}^{K} \tau_i^* = 1. \tag{22}$$

Otherwise, the remaining $1 - (\tau_0^* + \sum_{i=1}^{K} \tau_i^*)$ time can be allocated to the PB or any one of the MTCDs, which will increase the value of Q without decreasing the achievable rates of the other MTCDs.

Finally, we substitute equations (19) and (21) into equation (22) and can get the optimal solution of τ_i as

$$\tau_i^* = \frac{A_i}{D + y^* - 1}, \quad \forall i \in \mathbb{K}. \tag{23}$$

Up to this point, we have found the optimal solution, i.e., τ_0^*, τ_i^* and R_i^* for $\forall i \in \mathbb{K}$ of the problem (6) in close form.

4.3. Centralized Solution Method. It is noted that the problem (6) is solved at the UE by using a centralized manner. Thus, the channel state information (CSI) of the MTCDs is required by the UE, and thereafter, the scheduled transmission time should be broadcasted to the MTCDs by the UE. These messages can be conveyed between the UE and the MTCDs through a dedicated feedback channel.

5. Simulation Results

To examine the performance of the proposed rate allocation method, a simulated MTCN is set up as shown in Figure 3. The dimension of the room is 10 m × 10 m × 3 m. A human equipped with $K = 4$ MTCDs in/on the body is walking around in the room. A PB is deployed in the center of the ceiling (with coordinate (5 m, 5 m, 3 m)). In order to avoid creating powerful electromagnetic interference to the BS, both the WPT and WIT links adopt the 915 MHz ISM (industrial, scientific, and medical) band as the center frequency. It is noted that the 915 MHz is also used by some products, e.g., the Powercaster Transmitter TX91501 [26] and the Powerharvester 114 [27] for RF-based WPT and EH. According to [16], the transmission power of the PB is fixed at $P_{\text{PB}} = 3$ W. The noise power at the UE receiver is set as $\sigma^2 = 10^{-15}$ W [28]. For the ith MTCD, $\forall i \in \mathbb{K}$, we assume that the energy harvesting efficiency for WPT is $\xi_i = 0.5$, and the portion of harvested energy used for information transmission is $\alpha_i = 0.5$. It is noted that the symmetry axiom of NBS [19] orders that the MTCDs as the game players should have the same minimal utility requirement $R_1^{\min} = R_2^{\min} = \cdots = R_K^{\min}$. Thus, in accord with this axiom, we set $R_1^{\min} = R_2^{\min} = \cdots = R_K^{\min} = 500$ Kb/s in the simulation. In practical applications, we can choose an MTCD with the maximal minimum-rate demand in the system and set its minimum-rate demand as the disagreement point of the game. In addition, we assume that the bandwidth of the network is 1 MHz, and the WPT and WIT links are with the same propagation model. In detail, the path loss exponent is 3.8, the body shadowing is modeled as a Gauss-distributed random variable with zero mean and variance 15 dB, and the small-scale fading is modeled as Rayleigh fading with unit mean. For easy reference, the assumed parameter values used in the simulation are summarized in Table 1.

At the beginning of the simulation, the human is in the southwestern corner of the room. The coordinates of the UE and the MTCDs are set as (1, 1, 1.2), (0.9, 0.9, 1.8), (1.1, 1.1, 1.1), (0.9, 1.1, 0.6), and (1.1, 0.9, 0.1), respectively. Then, the human moves along a straight line from the corner to the center of the room. The proposed rate allocation method is termed as the *NBS-rate* method in the following analysis,

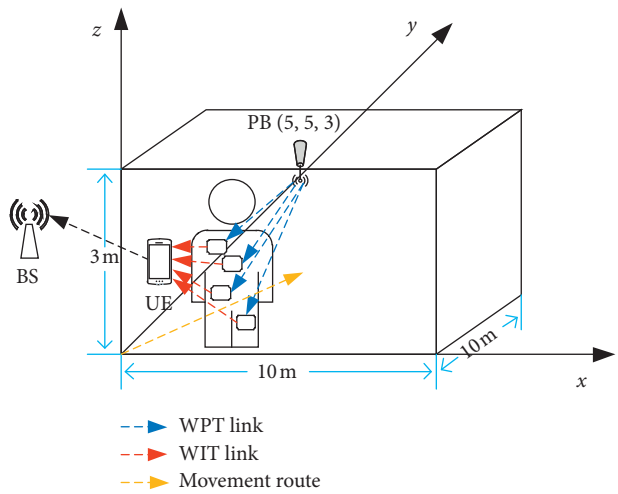

Figure 3: The simulated network structure.

Table 1: Assumed system parameter values.

Parameter	Definition	Value
K	Number of the MTCDs	4
P_{PB}	Transmission power at the PB	3 W [26]
σ^2	Noise power at the UE receiver	10^{-15} W [28]
ξ_i	Energy harvesting efficiency	0.5
α_i	Portion of harvested energy used for information transmission	0.5
$R_i^{\min}$	The minimum rate requirement of an MTCD	500 Kb/s
n	Path loss exponent	3.8 [16]
φ	Body shadowing loss margin	15 dB [16]

and the *maximum-rate* method as well as the *common-rate* method is also simulated for comparison purpose.

In Figure 4, we show the *sum rate* achieved by all the MTCDs using different rate allocation methods. In Figure 5, we compare the *fairness* performance of these methods by showing their *fairness index* [28]. It should be noted that the displayed results are obtained by averaging over 1000 randomly generated channel realization at each position. Let $\mathbf{R} = (R_1, \ldots, R_K)$ be the data rates achieved by K MTCDs. The *fairness index* is defined as $I = 1/K \cdot (\sum_{i=1}^{K} R_i)^2 / (\sum_{i=1}^{K} R_i^2)$, which tends to 1 when the K MTCDs have the same data rate and tends to $1/K$ when the data rates achieved by different MTCDs are severely *unfair*.

From Figures 4 and 5, we can observe that the *common-rate* method has the lowest *sum rate* but the best *fairness* index, as it contributes most of the available time resource to the MTCD with the worst channel. By contrast, the *maximum-rate* method achieves the highest *sum rate* but bears the notably *unfair* problem. The *fairness index* is almost below 0.3 and is with large undulating. It is because that the MTCD with the best channel always dominates the resource allocation in the *maximum-rate* method. Therefore, the other MTCDs have to starve. As for the proposed *NBS-rate* method, it can obtain a good tradeoff between the *fairness* and the *sum rate* performance. The *fairness index I* is always larger than 0.6, and the *sum rate* loss towards the *maximum-rate* method is only 1/2 of the *common-rate* method. Since the *maximum-rate* method achieves the best system efficiency and the *sum rate* performance gap between the proposed *NBS-rate* method and the *maximum-rate* method is much lower than that between the *common-rate* method and the *maximum-rate* method, we can conclude that the proposed *NBS-rate* method is more efficient than the *common-rate* method but does not break the per-user fairness of the system [29].

Next, we examine the QoS performance of different rate allocation methods. When the human moves to the coordinate $(x, y) = (3\,\mathrm{m}, 3\,\mathrm{m})$, we show the data rate and transmission time allocated to each MTCD, respectively in Figures 6 and 7.

From Figures 6 and 7, we observe that the QoS requirements of the MTCDs can be fulfilled by both the *NBS-rate* and the *common-rate* methods. As for the *maximum-rate* method, the data rates of the 3rd and 4th MTCDs are only 10 Kb/s, which is much lower than the required 500 Kb/s. In addition, by using the *common-rate* method, the transmission rate is allocated to the MTCDs in a strictly *fair* manner regardless of their channel difference. In the premise of QoS assurance, the *NBS-rate* method can allocate the system resource to the MTCDs proportionally according to their channel conditions. Thus, the *efficiency* of resource utilization is greatly improved.

In conclusion, the reason causing the unfairness problem and the low efficiency problem is the distinction of the

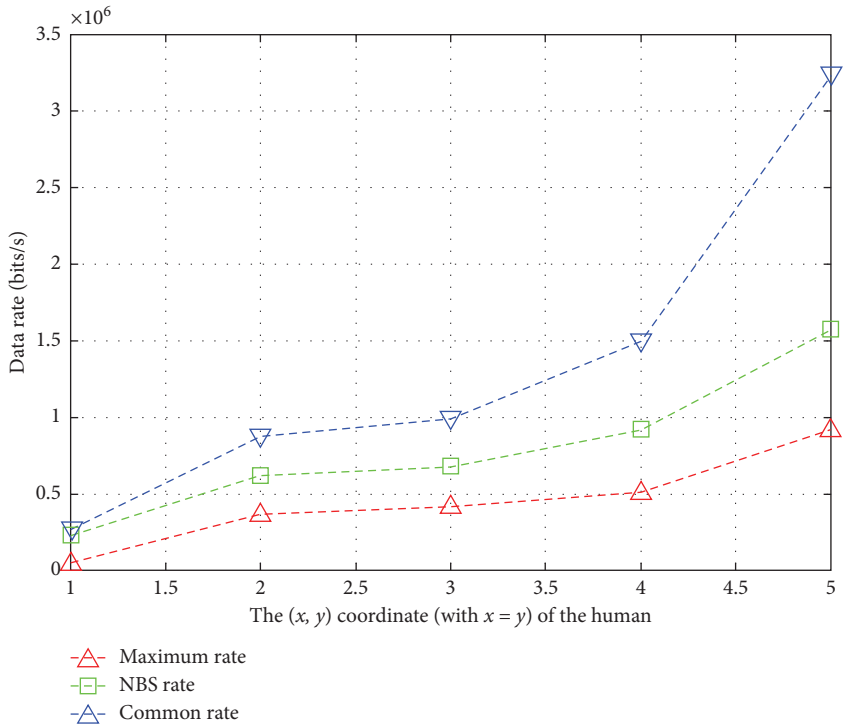

Figure 4: The *sum rate* of different methods.

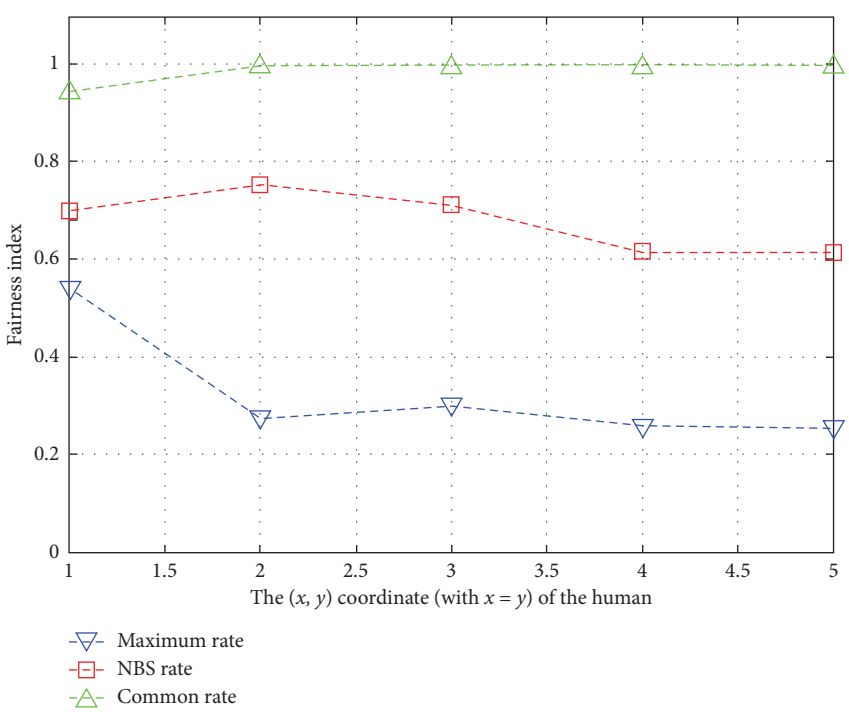

Figure 5: The *fairness index* of different methods.

channel conditions of the MTCDs. As for the *maximum-rate* method, most of the radio resource is allocated to the MTCDs with better channel condition. In contrast, the *common-rate* method allocates more radio resource to the MTCDs with worse channel condition, which reduces the system efficiency. In comparison to the *maximum-rate* method and the *common-rate* method, our proposed *NBS-rate* method can achieve a good tradeoff between the per-user fairness and system efficiency. It is because that the utility function is associated with the Pareto optimum for the *NBS-rate* method.

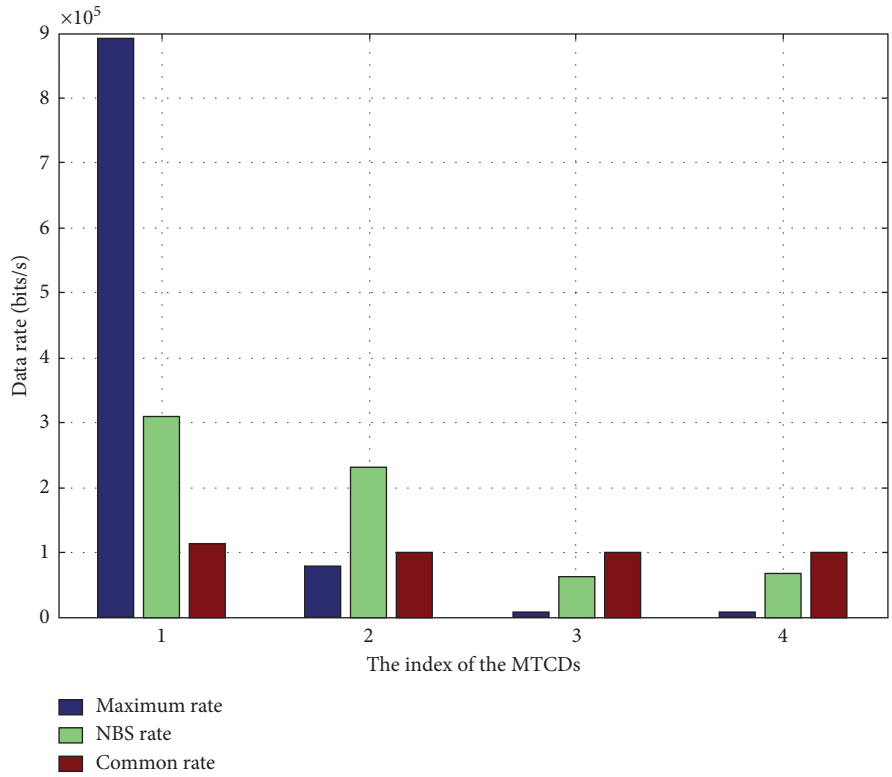

Figure 6: Rate allocation by using different methods.

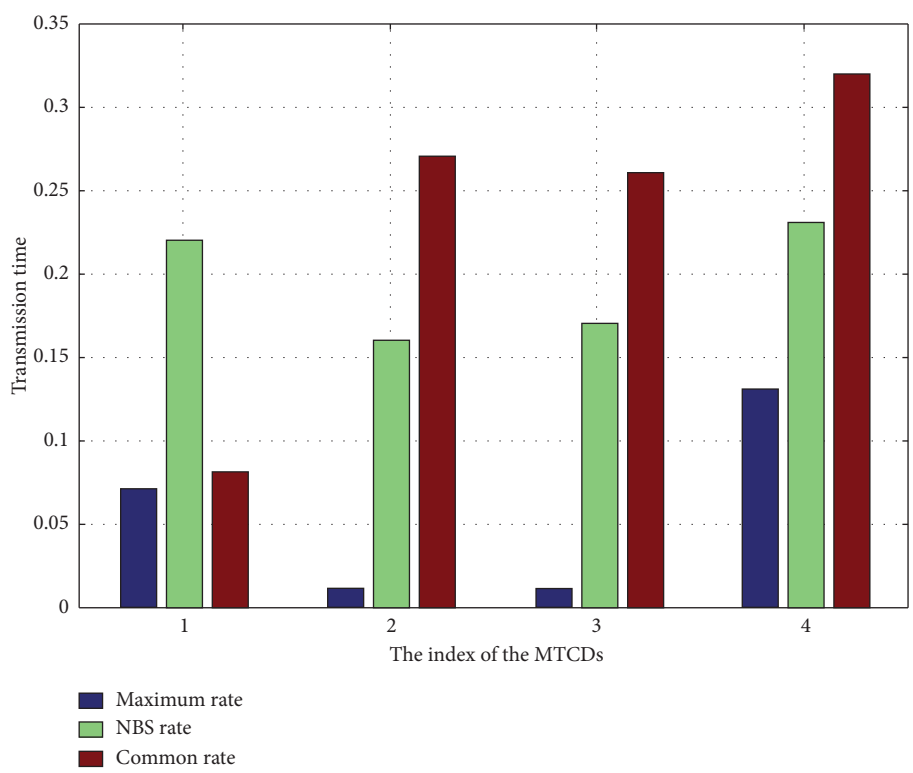

Figure 7: Transmission time allocation by using different methods.

6. Conclusions

In this paper, we propose a cooperative game theoretic method to deal with the resource allocation problem in wireless-powered MTCNs. We first propose a frame structure over time-and-spectrum domain for an SWIPT network. Then, the utility function for a MTCD is defined based on the achievable data rate. The resource allocation problem in a hierarchical SWIPT network is formulated as a cooperative game. By solving the NBS of the proposed game problem, the optimal duty time for the WPT and WIT links are jointly found in close form. The simulation results show that the communication and energy resource are allocated to a group of MTCDs fairly and efficiently in the Pareto optimal sense.

Data Availability

The data used to support the findings of this study are available from the corresponding author upon request.

Conflicts of Interest

The authors declare that they have no conflicts of interest.

Acknowledgments

This work was supported in part by the Postgraduate Research & Practice Program of Education & Teaching Reform of China University of Mining and Technology, the National Natural Science Foundation of China (Grant nos. 51774281, 61572389, and U1705263), and the National key R & D Plan (Grant no 2018YFC0808302).

References

[1] F. Ghavimi and H.-H. Chen, "M2M communications in 3GPP LTE/LTE-A networks: architectures, service requirements, challenges, and applications," *IEEE Communications Surveys & Tutorials*, vol. 17, no. 2, pp. 525–549, 2015.

[2] M. A. Mehaseb, Y. Gadallah, A. Elhamy, and H. Elhennawy, "Classification of LTE uplink scheduling techniques: an M2M perspective," *IEEE Communications Surveys & Tutorials*, vol. 18, no. 2, pp. 1310–1335, 2016.

[3] H. A. Maw, H. Xiao, B. Christianson, and J. A. Malcolm, "BTG-AC: break-the-glass access control model for medical data in wireless sensor networks," *IEEE Journal of Biomedical and Health Informatics*, vol. 20, no. 3, pp. 763–774, 2016.

[4] K. Yang, S. Ou, K. Guild, and H.-H. Chen, "Convergence of ethernet PON and IEEE 802.16 broadband access networks and its QoS-aware dynamic bandwidth allocation scheme," *IEEE Journal on Selected Areas in Communications*, vol. 27, no. 2, pp. 101–116, 2009.

[5] A. Konstantinidis, K. Yang, Q. Zhang, and D. Zeinalipour-Yazti, "A multi-objective evolutionary algorithm for the deployment and power assignment problem in wireless sensor networks," *Computer Networks*, vol. 54, no. 6, pp. 960–976, 2010.

[6] K. Zheng, F. Hu, W. Wang, W. Xiang, and M. Dohler, "Radio resource allocation in LTE-advanced cellular networks with M2M communications," *IEEE Communications Magazine*, vol. 50, no. 7, pp. 184–192, 2012.

[7] G. Zhang, J. Qian, S. Xiao, and J. Gu, "Hierarchical resource allocation scheme for M2M communications enabled by cellular networks," in *Proceedings of the 16th International Symposium on Modeling and Optimization in Mobile, Ad Hoc, and Wireless Networks (WiOpt)*, pp. 1–6, Shanghai, China, May 2018.

[8] D. W. Kwan Ng, T. Q. Duong, C. Zhong, and R. Schober, *Wireless Information and Power Transfer: Theory and Practice*, Wiley Telecom, Hoboken, NJ, USA, 2019.

[9] I. Krikidis, S. Timotheou, S. Nikolaou, G. Zheng, D. W. K. Ng, and R. Schober, "Simultaneous wireless information and power transfer in modern communication systems," *IEEE Communications Magazine*, vol. 52, no. 11, pp. 104–110, 2014.

[10] S. Y. Hui, "Planar wireless charging technology for portable electronic products and Qi," *Proceedings of the IEEE*, vol. 101, no. 6, pp. 1290–1301, 2013.

[11] https://www.powercastco.com.

[12] P. Mekikis, A. Antonopoulos, E. Kartsakli, N. Passas, L. Alonso, and C. Verikoukis, "Stochastic modeling of wireless charged wearables for reliable health monitoring in hospital environments," in *Proceedings of the 2017 IEEE International Conference on Communications (ICC)*, pp. 1–6, Paris, France, May 2017.

[13] P.-V. Mekikis, A. Antonopoulos, E. Kartsakli, A. S. Lalos, L. Alonso, and C. Verikoukis, "Information exchange in randomly deployed dense WSNs with wireless energy harvesting capabilities," *IEEE Transactions on Wireless Communications*, vol. 15, no. 4, pp. 3008–3018, 2016.

[14] E. Ibarra, A. Antonopoulos, E. Kartsakli, J. J. P. C. Rodrigues, and C. Verikoukis, "QoS-aware energy management in body sensor nodes powered by human energy harvesting," *IEEE Sensors Journal*, vol. 16, no. 2, pp. 542–549, 2016.

[15] H. Ju and R. Zhang, "Throughput maximization in wireless powered communication networks," *IEEE Transactions on Wireless Communications*, vol. 13, no. 1, pp. 418–428, 2014.

[16] J. C. Kwan and A. O. Fapojuwo, "Radio frequency energy harvesting and data rate optimization in wireless information and power transfer sensor networks," *IEEE Sensors Journal*, vol. 17, no. 15, pp. 4862–4874, 2017.

[17] K. Yang, S. Ou, H. Chen, and J. He, "A multihop peer-communication protocol with fairness guarantee for IEEE 802.16-based vehicular networks," *IEEE Transactions on Vehicular Technology*, vol. 56, no. 6, pp. 3358–3370, 2007.

[18] S. Shen, J. Qian, D. Cheng, K. Yang, and G. Zhang, "A sum-utility maximization approach for fairness resource allocation in wireless powered body area networks," *IEEE Access*, vol. 7, pp. 20014–20022, 2019.

[19] Z. Han, Z. Ji, and K. J. R. Liu, "Fair multiuser channel allocation for OFDMA networks using nash bargaining solutions and coalitions," *IEEE Transactions on Communications*, vol. 53, no. 8, pp. 1366–1376, 2005.

[20] T. Aoki, Q. Yuan, D. Quang-Thang, M. Okada, and H. Hsu, "Maximum transfer efficiency of MIMO-WPT system," in *Proceedings of the 2018 IEEE Wireless Power Transfer Conference (WPTC)*, pp. 1–3, Montreal, QC, Canada, June 2018.

[21] E. Boshkovska, D. W. K. Ng, N. Zlatanov, and R. Schober, "Practical non-linear energy harvesting model and resource allocation for SWIPT systems," *IEEE Communications Letters*, vol. 19, no. 12, pp. 2082–2085, 2015.

[22] X. Xu, A. Özçelikkale, T. McKelvey, and M. Viberg, "Simultaneous information and power transfer under a non-linear RF energy harvesting model," in *Proceedings of the 2017 IEEE International Conference on Communications Workshops (ICC Workshops)*, pp. 179–184, Paris, France, May 2017.

[23] H.-W. Tseng, R.-Y. Wu, Y.-Z. Wu et al., "An efficient cross-layer reliable retransmission scheme for the human body shadowing in IEEE 802.15.6-based wireless body area networks," *IEEE Sensors Journal*, vol. 16, no. 9, pp. 3282–3292, 2016.
[24] S. Boyd and L. Vandenberghe, *Convex Optimization*, Cambridge University Press, London, UK, 2004.
[25] B. Johansson, P. Soldati, and M. Johansson, "Mathematical decomposition techniques for distributed cross-layer optimization of data networks," *IEEE Journal on Selected Areas in Communications*, vol. 24, no. 8, pp. 1535–1547, 2006.
[26] http://www.powercastsensors.com/files/TX91501-datasheet.pdf.
[27] https://www.powercastco.com/products/powerharvesterreceivers.
[28] Z. Zhang, J. Shi, H. Chen, M. Guizani, and P. Qiu, "A cooperation strategy based on nash bargaining solution in cooperative relay networks," *IEEE Transactions on Vehicular Technology*, vol. 57, no. 4, pp. 2570–2577, 2008.
[29] J. He, K. Guild, K. Yang, and H.-H. Chen, "Modeling contention based bandwidth request scheme for IEEE 802.16 networks," *IEEE Communications Letters*, vol. 11, no. 8, pp. 689–700, 2007.