Hindawi
Mobile Information Systems
Volume 2021, Article ID 7622308, 11 pages
https://doi.org/10.1155/2021/7622308

Research Article

Research on Public Art Parameterization of Interactive Installation Based on Sensor and Virtual Reality

Shukui Song

School of Digital Arts and Design, Dalian Neusoft University of Information, Dalian 116023, Liaoning, China

Correspondence should be addressed to Shukui Song; songshukui@neusoft.edu.cn

Received 21 August 2021; Revised 13 October 2021; Accepted 26 October 2021; Published 26 November 2021

Academic Editor: Sang-Bing Tsai

With the progress of human society, more and more scientific and technological achievements are applied to people's development activities, and virtual reality technology is one of them. This case is a study on the path, form, and role of virtual reality and augmented reality technology in public art design. Through combining the public art form and current situation, we put forward the problem of increasing public art creation methods through the intervention of virtual reality technology, change the display method of public art with innovative technical solutions, and explore innovative ways of public art design application. In the research process, the author carried out detailed case research, technical demonstration, and creative practice on virtual reality technology; combined and studied a lot of advanced technical means that can be applied in public art creation and display design; and explored the collaborative innovation of technology and art, the public art design methods, and application approaches in China. On the basis of a comprehensive understanding of the artistic effects that can be achieved by related software and the future directions studied by technical personnel, analyzing the demand and feasibility of the technology in the application of public art, and exploring and summarizing virtual reality technology and augmented reality technology under the background of rapid development and popularization, public art design uses these technologies to solve practical problems and promotes the process of art design innovation and publicization by means of innovative media and experience forms. It increases the importance of virtual technology in public art and changes the traditional business model of public art. Experimental results show that the public's attention to public equipment based on sensors and virtual reality technology has increased by more than 60%, and modern technology is used to make up for the development of public art and culture. The digital sustainable development of interactive installations of public art in my country provides new ideas.

1. Introduction

Since the third technological revolution, especially since the information revolution in the early 20th century, people's lives have undergone earth-shaking changes. People in the information revolution era use skills and computers to improve people's survivability. People take the computer as the center and rely on the transformation of computers to acquire new knowledge, which limits the space for people to understand and transform the world to a certain extent. If we want to fundamentally change this phenomenon, let people rule and let computers serve the people, we must overcome many problems, establish a coordinated human-computer relationship, and promote human-computer interaction. Virtual reality technology is exactly what promotes humans and computers. Interaction technology is one of the ways of interaction today.

Zhang Limin believes that in the past few decades, virtual reality technology has developed rapidly. The interaction technology between humans and computers in virtual reality is based on sensors. For this reason, he first explained the definition of virtual reality and studied sensor-based virtual reality, the research of human-computer interaction technology and the problems of sensors in human-computer interaction, and the further application of sensors in human-computer virtual reality interaction technology. However, he did not consider the ethical and moral issues in virtual human-computer interaction, which would be hindered in the actual promotion [1]. Xu G. believes that the research in this situation involves the application of virtual reality

technology in public art design, as well as the needs and convenience of applying virtual technology and real technology to public art. In the context of the rapid development and diffusion of virtual technology and real technology, how can public art design use this technology and trend to solve existing problems, change creative methods and propose public art methods, and promote the development of scientific scholars is explored. However, the proposed algorithm has shortcomings and needs to be continuously improved in subsequent experiments [2]. Li Ming believes that with the development of Internet information technology, digitization has become more and more integrated into people's daily life, and more and more people have studied and appreciated it. He explored a new form of expression that combines art and digitization. This new form of communication appears in the field of public art in a unique and innovative way. Interactive installation art has changed people's lifestyles and aesthetic concepts. In traditional public art works just interacting with the audience, the interactive installation changes the way the audience interacts and participates in the work. At the same time, it provides a new direction for the development of installation art. Through the research and discussion of interactive installations, the development and trend of interactive installation art can be anticipated and discussed. But the public's aesthetics will not change for a while, and the process will be very slow [3].

In the theoretical research, this article analyzes the status quo and problems of public art more comprehensively and proposes related solutions and creative VR public art platform concepts. The application of virtual reality technology in all aspects of public art has been creatively extracted, selected, and recreated. This research has practical value for the development of the industry and the development of disciplines [4, 5]. The core of public art lies in its "publicity", which serves common people and the masses. The use of virtual reality technology in the creation and display of public art grafting it onto the Internet means that public art will serve more people, thus getting appreciated by more people and having an impact on more people.

2. Virtual Reality Technology Method

2.1. Interactivity of Virtual Reality Technology. In the virtual reality system, the realization of interactivity is different from the traditional multimedia technology. From the invention of the computer till today, the interaction between humans and computers in traditional multimedia technology mainly includes one-dimensional and two-dimensional interactions through the keyboard and mouse, while the virtual reality system emphasizes the natural interaction between humans and computers [6, 7]; for example, activities such as human walking, head rotation, hand movement interact with the virtual world in real-time to produce the same perception in the real world, even if the user himself does not know the existence of the computer (Figure 1).

(1) Human participation and feedback in the virtual environment: the human in the virtual reality system is an important factor. This is the condition of all changes. Due to human participation and feedback, real-time interaction can make various requirements and changes in the virtual environment [8,9].

(2) The nature of real-time human-computer interaction: due to its real-time nature, the virtual reality system can quickly respond to user input. For example, turning the head can immediately produce appropriate changes in the displayed scene and receive other appropriate feedback. When manually moving an object in the virtual world, the position of the object will immediately change accordingly [9]. If there is no real-time human-computer interaction, the virtual environment will lose its sense of reality, as shown in Figure 1.

2.2. Requirements for the Realization of Virtual Reality and Augmented Reality in Public Art. The creation of public art will be affected by the surrounding environment, as well as the culture and ideas that the author wants to convey. Each different environment or place contains a different spirit, which depends on the geographical location and the society of the place. Functions and cultural connotations are closely linked. The function and connotation of the place determine the form and function of the public art work, which shows the importance of the environment to the public art work [10,11]. Public art is not an isolated individual in the urban environment. It has the characteristics of holistic and systemic nature. The public will also trigger different behaviors in different spaces and places [12, 13].

From the perspective of functional manifestation, public art includes works of landscape facilities, works of landmark art at border entrances and exits, and works of centrality of landscape areas. Therefore, public art should include different positioning for different environments and places. And functionally, it also triggers a different external performance. So even when VR technology is used to create public art, when real space is transformed into virtual space, the assumption of space still needs to be paid attention to. The history, culture, and corresponding social consciousness of the city will also have a differentiated influence on the spirit of the place. Therefore, when the government or public art demanders release their needs for works of art, they must have a sound urban cultural background endorsement and clarify the specific positioning, nature, and functional needs of the street. Public art must have a specific environment when it is created. This place can have a virtual appearance in the virtual reality space that has not yet been constructed, or it can be taken through panoramic photography after it has been completed, but the public art work must be placed in a special space so that can it be evaluated [14,15]. Residents of the city can also make suggestions and stamps on the familiar street or the new streetscape of the city. They are the people who should have the right to speak and suggest the city's cultural construction and street construction [16,17].

Figure 1: Interactivity of virtual reality technology (the picture is from https://image.baidu.com/).

2.3. Public Art Experience Achievable in Virtual Reality. Virtual reality technology can not only provide new ideas for the creation of public art, but also break the constraints of space, time, and angle in the viewing of public art.

In Figure 2, the interaction in the creation of public art is shown. (1) For art works with technical functions such as sound and light in the design, there can be more bold creation and full performance in the creation of the virtual world. (2) The author can design the different states of the work during the day and night to realize the switch between day and night. (3) The work can be observed from different perspectives, and timely adjustments can be made to the work, especially the general perspective of the work, to solve the problem of the proportion of works [18,19]. (4) By providing a variety of creative materials and creative methods, something in reality can be realized in the virtual world, and creation can also be made in virtual reality that is not in reality. (5) The creator can change the size of the work arbitrarily during the creation process and intuitively control the scale of the work. (6) You can independently select the existing creative environment in the content or enter the real environment space through panoramic shooting. Interactions in viewing or experiencing public works of art: (1) for some large-scale works of art, the experiencer can enter the space of public art to roam and feel the space. (2) Through the action interaction of the handle, the touch sculpture can be imitated. In the virtual space, the viewer can also experience the changes in the space and form of the sculpture. 3. The viewer can watch the work from different perspectives [20,21]. (4) By activating the voice text or video introduction, viewers better understand the background and story of artistic creation. (5) You can zoom in on the important details of the work to observe the work in more detail.

3. Sensor-Based Correlation Experiment

3.1. Initial Tactile Information Collection. In order to perceive the external environment quickly and accurately, many experts and scholars have developed various sensors according to different needs and sensing principles can be divided into seven types, namely, piezoresistive effect, piezoelectric effect, pyroelectric effect, capacitive magnetoelectric sensing, photoelectric sensing, mechanical sensing, and ultrasonic sensing. Sensitive materials are used for the conversion and sensitive elements in sensor design. Its performance directly affects the performance indicators of the sensor. Therefore, in order to be able to design a sensor that meets actual requirements, the first problem to be solved is to select the sensitive material [22,23]. In order to enable the flexible tactile sensor to have efficient sensing and energy conversion capabilities, this paper selects a piece of elastic silica gel as the sensitive element of the flexible tactile sensor and selects a strain gauge as the conversion element of the flexible tactile sensor. According to the requirements of the subject and comprehensive consideration of various factors in the laboratory, due to the advantages of simple structure, strong antifatigue, easy signal processing, and low signal lag, the strain sensor is selected in this article, as shown in Figure 3:

$$Q = Q_C * K \cos e + V. \tag{1}$$

In the first state, the sensitive unit is not under pressure, and the unit volume of conductive rubber Q appears as an open switch in the circuit; in the second state, the sensitive unit is under pressure Q1, and the voltage V1 is read at R at this time [24]; in state three, the time-sensitive unit receives the pressure Q2, and the voltage V2 is read at R at this time.

$$Q_C = Q_1 + Q_2 = R \times Q_1 - R \times Q_2. \tag{2}$$

The value of the resistance Q per unit volume of conductive rubber under pressure can be calculated from the formula, and the coefficient can be found from the piezoresistance curve according to this value.

When the resistance wire is subjected to a tensile force F, the resistance wire elongates L, the cross-sectional area decreases C, and the resistivity changes due to the change of the material lattice, which causes the resistance to also change K. Differentiate and get the relative change of resistance as

$$\frac{dQ}{Q} = \frac{dC}{C} = \frac{dF}{F} + Q^C. \tag{3}$$

Among them,L is the amount of change in length, expressed as strain M:

$$M = \frac{dL}{L} - \sqrt{M} + C. \tag{4}$$

According to the mechanics of materials, in the elastic range, when the metal wire is under tension, the metal wire

elongates in the axial direction and shortens in the radial direction, so that M is the axial strain of the metal resistance wire [25], and C is the metal resistance wire. Therefore, the relationship between axial strain and radial strain can be expressed as

$$\frac{dQ}{Q} = -\omega\frac{dL}{L} + \sqrt{M} = -\omega M. \quad (5)$$

μ in the formula is the Poisson ratio of the metal resistance wire material, and the negative sign indicates that the strain direction is opposite. Substituting (3) into (5), we can obtain

$$\frac{dR}{R} = (1 + 2\omega)C + \frac{dF}{F} - \omega, \quad (6)$$

where R is the leakage resistance of the Kth row and R is the leakage resistance of the Zth column, expressed as

$$\frac{1}{R_i} = \sum\nolimits_1^n \frac{1}{R_z} + \frac{1}{R}. \quad (7)$$

In (7), the insulation resistance between P and U row and column electrodes analysis of the circuit shows that the circuit is a typical reverse addition circuit:

$$V_{\text{cout}} = -P_1\left(\frac{V}{R} + \frac{U}{R}\right) = -\frac{1}{R_i} \times V_i. \quad (8)$$

Therefore, in this design, the line scan method is used to scan and collect the tactile signals. The circuit is mainly controlled by a set of pulse sequences and controlled by a six-bit counter to control the gating of eight analog switches [26].

3.2. Design of Interdigital Transducer. The period size of the interdigital transducer will directly affect the frequency of the surface acoustic wave excitation. A series of comprehensive factors are considered, and the preparation process conditions of the interdigital transducer must also be considered. The surface acoustic wave sensor required in this article is the type of the interdigital transducer of the piece as a uniform interdigital transducer. The calculation method of the period of the interdigital transducer and the width of the interdigital transducer is as follows:

$$\lambda = \frac{V_s}{F_0}. \quad (9)$$

F is the center frequency of the surface acoustic wave device, which can also be called the frequency of the surface acoustic wave excited by the interdigital transducer, and V is the transfer rate of the surface acoustic wave on the specific piezoelectric material.

$$Ga = (kn)^2 * (\omega C_x). \quad (10)$$

Because the ratio of the radiation conductance of the interdigital transducer of the surface acoustic wave device is equal to the radiation power of the interdigital transducer, the actual value of the radiation conductance of the interdigital transducer and the initial value can be known [27–30].

$$\frac{f_{db}}{f} = \frac{0.885}{N}. \quad (11)$$

It can be calculated from the above formula that the first zero point of the interdigital transducer is at

$$\frac{f - f_0}{f_0} = \pm\frac{1}{N}. \quad (12)$$

Assuming that the excited interdigital transducer adds an excitation signal, it do not consider the dispersion of the piezoelectric substrate. The time that the surface acoustic wave propagates through the delay line is called the delay time, and the delay time is one part of the phase shift speed [30].

$$Q = 2\pi m. \quad (13)$$

It can be seen from the above formula that the quality factor is directly proportional to the coefficient M. When the coefficient M increases, the quality factor of the surface acoustic wave device will also increase, and the quality factor is proportional to the interdigital transduction of the surface acoustic wave device. Whether the excitation frequency of the generator is stable and positively correlated, causing such a phenomenon is when the phase is shifted, and only a small frequency change can correct the change caused by the phase.

If it is to be determined that the oscillation frequency generated by the oscillator can be within the frequency range excited by the set surface acoustic wave device, it is necessary to ensure that there is a phase precondition in the passband that meets the precondition standard of oscillation. According to the standard for the oscillation phase of the delay line surface acoustic wave device to start to oscillate, the frequency difference between the phases of the two zero points that are close to each other is M, and at the same time, it can be calculated as follows:

$$\Delta f = 0.885\frac{f_0}{N_2}. \quad (14)$$

In order to satisfy at least one point in the passband that satisfies the phase condition of the oscillator, there must be

$$\Delta f \le \Delta f_{3\,db}. \quad (15)$$

Although it can be seen from the previous calculations that the greater the distance between the excitation interdigital transducer and the receiving interdigital transducer, the more stable the operating frequency of the surface acoustic wave device, this is only one-sided theoretical data. The situation is that when the distance between the excitation interdigital transducer and the receiving interdigital transducer is too large, the loss caused by the surface acoustic wave in the propagation process will continue to rise, and, at the same time, the number of frequencies that meet the oscillation standard will increase more and more. When the number of frequencies that meet the oscillation

Figure 2: Public art creators' grasp of the city's real space (the picture comes from https://image.baidu.com/).

standard is excessive, there will be parasitic oscillations [31,32]. In addition, the increase in the distance between the excitation interdigital transducer and the receiving interdigital transducer will increase the overall chip, so that the overall surface acoustic wave device will become larger, which is inconsistent with the premise that the surface acoustic wave device is miniaturized.

4. Realization of Virtual Reality or Augmented Reality Technology

4.1. Virtual Reality Hardware Equipment. The current VR market is a three-part world of "mobile phone boxes, all-in-ones, and PC helmets." For the low-end market, the mobile phone carton box has opened the window for the general public to try virtual reality technology at a very low price. Starting from Google's cardboard, it has aroused the interest of the general public and quickly divided the low-price advantage area. The main competitive advantage is low cost and basic experience effect. But judging from the actual experience effect and the shortcomings of frequent disassembly and assembly of mobile phones, this can only be regarded as an entry-level product for virtual reality experience. Facing the high-end market, commercial market, professional market, and enthusiast market, the PC helmet brings a more comfortable and immersive VR experience with its excellent imaging technology. Therefore, the price it brings is bound to be relatively high. Therefore, only professional designers or commercial investors are willing to pay this high cost. This creates a ditch for entering ordinary households. This is the same as the original cameras and computers. The popularization process is similar (at first it was used by professionals, and later it entered thousands of households as the price dropped sharply). The third type of product-VR all-in-one can be said to be an aisle between the two extreme products. Its volume is slightly larger than a mobile phone box, but it does not want to be connected to a computer like a PC helmet, and the location cannot be large. It can provide relatively high-quality pictures, easy to carry, and the price is acceptable to ordinary families, so this makes it also obtain good results in the market, as shown in Table 1.

The practical activities in virtual reality provide a wider range of applications for human beings. Nowadays, virtual reality can be seen to shine in all aspects of production and life.

This meets the needs of humans for high-level human-computer interaction. As shown in Figure 4, the highest revenue share is in the entertainment sector. Virtual reality technology can transform all two-dimensional images, screens, and games into three-dimensional scenes, which can be interacted with in real time. Let the experiencer be on the scene and enjoy the joy of the entertainment world. At present, VR movies, VR tourism, VR live broadcast, VR concerts, and VR games are all adding vitality to human entertainment life, and more and more entertainment projects are moving towards the "+VR" ranks. In addition, in military, education, and medical and retail fields, virtual reality technology also plays a huge role by virtue of its advantages beyond the limitations of time and space and physical conditions. Technology is always evolving and virtual reality is also continuously merging. Exploration will bring more gains and progress to mankind.

As shown in Table 2, "long time and difficult to reproduce" refers to the use of virtual reality technology to simulate the incomplete or disappeared buildings and landscapes in reality to "reproduce" the original historical appearance, enabling learners to roam and role-play "revisit the old place" in other ways. "Changes are complicated and difficult to capture" is to visualize abstract problems and simulate the natural phenomena and growth processes that are not easy to capture in a virtual environment, so that learners can gain a deeper understanding of knowledge through more intuitive methods such as observation and imitation. "Far away, difficult to visit in person" refers to the use of virtual reality technology to bring learners into a world that is difficult to reach in the real world, allowing them to visit and learn immersively, and collaboration and dialogue with virtual partners can also enhance learning. Interesting and experience. "Complex structure, difficult to concrete" means that some complex and tiny substances, such as atoms and molecules, are difficult to observe. Virtual reality technology can simulate their structure and disassemble and combine complex structures, so that learners can observe and more intuitively learn.

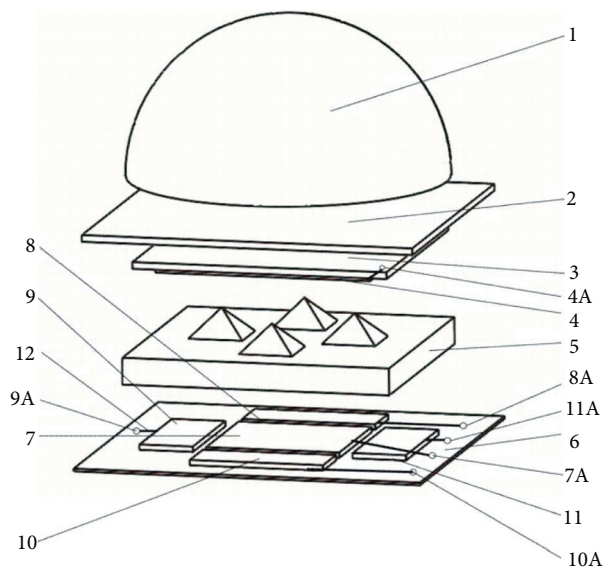

Figure 3: Gait tactile sensor (the picture comes from https://image.baidu.com/).

Table 1: Three common forms of VR headset hardware devices.

name	How to use	Features	Representative products
Helmet	Connect to PC/game console	Fast speed, better experience, suitable for more complex usage scenarios	Sony PS eye Rift VR Samsung Live!
Glasses	Plug in your phone to use	Flexible usage scenarios (but the experience is greatly restricted by the performance of the mobile phone, and the immersion is insufficient)	Samsung Gear VR Google Cardboard Storm Mirror
One machine	Can be used independently	Flexible usage scenarios, better user experience, but higher cost, and relatively least mature technology	SimLens Spirit Realm Little Black Storm Mirror

As shown in Figure 5, BRISK is used to extract and describe the feature points, and the RANSAC algorithm is used to purify the obtained point pairs. Figure 5 is the image obtained by the algorithm in this paper with the distance method. The image after the point is purified. From the comparison of the two images, we can already see that the classic RANSAC algorithm has large errors when extracting the feature points. The effect in this article is not as good as the traditional one. Using distance algorithm, this paper uses the combination of BRISK feature point extraction with SURF feature point description, BFMatcher matching and distance algorithm purification, and has achieved good results in the detection and matching of feature points.

4.2. Optimization of Feature Matching Point Pairs. After analysis and comparison, the BRISK + SURF object feature detection method is used to realize the entire AR system. The feature points are obtained through the BRISK algorithm, the obtained feature points are described using the SURF algorithm, and then the Hamming distance matching is performed; the system optimized by the distance method can meet our requirements for the stability, rapidity, and robustness of the AR system.

Table 3 provides the hardware and software platform of this section for image feature point extraction and matching and optimization experiments. The camera's open function is called under android, the video stream is obtained through the camera, and the feature point data and descriptors in the current frame image are obtained. The data in the feature database stored in the local database are compared with the data stored in the local database using the Hamming algorithm, and then the distance algorithm is used to purify the point pairs obtained after the matching has been completed, and finally the number of matched point pairs after optimization and setting is compared between the set thresholds, until the frame that meets the threshold requirements appears, then we think that the matching is successful.

As shown in Figure 6, the tracking registration module: according to the feature point pair set, the homography matrix H can be obtained, then the internal parameters of the camera can be obtained, and then the external parameters of the camera can be obtained from the above data, and the world coordinate system can be obtained the conversion matrix between the pixel coordinate system and the pixel coordinate system. At the same time, we also use the LK optical flow algorithm to track the previous frame, determine the current position of the feature point, and complete the camera parameter calculation, so as to calculate the virtual object that needs to have correctly fused position.

From Figure 7 we can see that the analysis can use the same mobile phone to detect the same image or object.

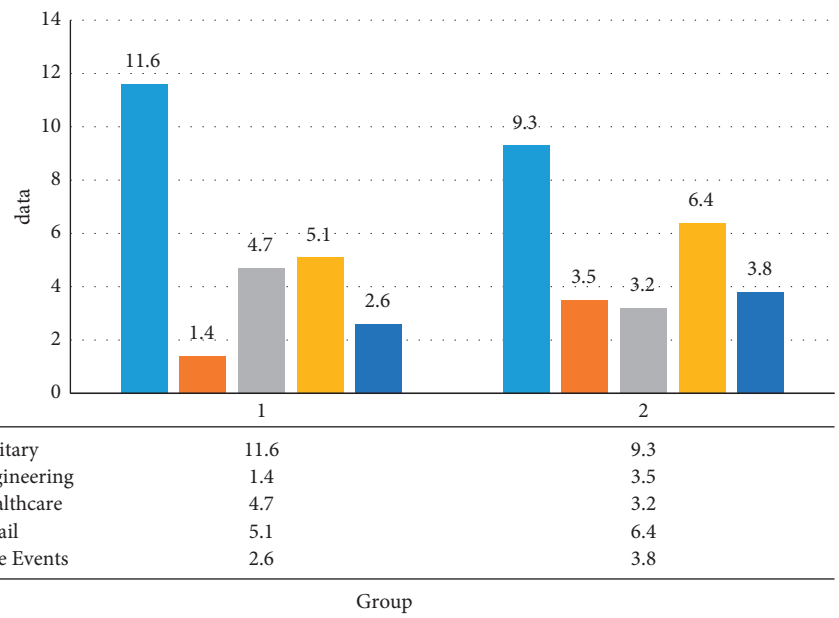

Figure 4: Projected revenue for VR&AR by sector.

Table 2: Theme selection (features and examples).

Theme feature	Examples of topics
Long time and difficult to reproduce	Tour of the forbidden city
Changes are fast and difficult to capture	Plant growth process
Far away, difficult to visit in person	The launch principle of lunar exploration satellites
Complex structure, difficult to concrete	The internal structure of the atom

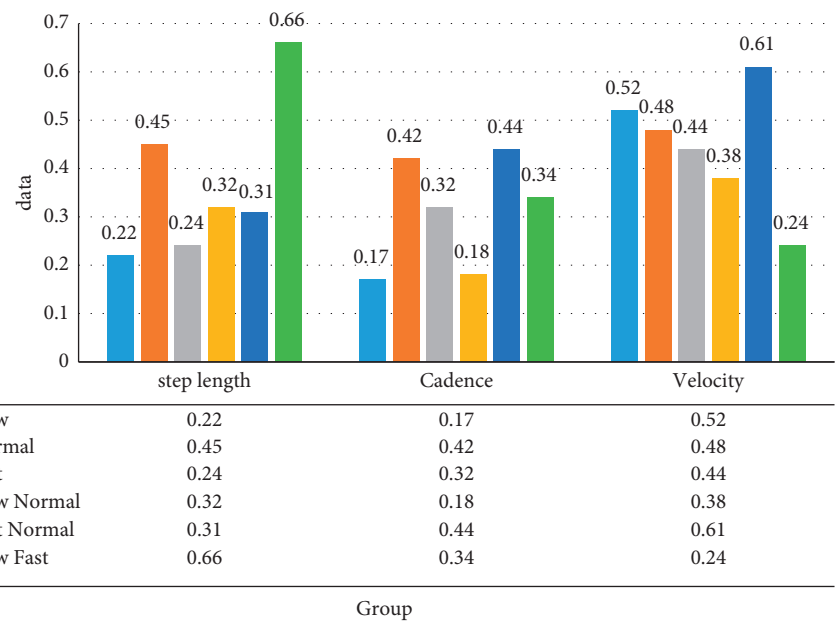

Figure 5: Feature point collection.

BRISK can achieve a good registration effect when the object to be detected rotates and the light intensity changes. Compared with SIFT, the overall running time of the SURF algorithm and SURF algorithm is much less, and compared to the pure BRISK algorithm, the rotation performance of the method in this paper can be seen through the

Table 3: Experimental platform.

Hardware platform	Software platform
(1) PC	(1) Win10 system, VS2010
(2) Inter i5 3.5 GHZ	(2) Open CV 2.4.3
(3) RAM 6.0 G	(3) OpenGL

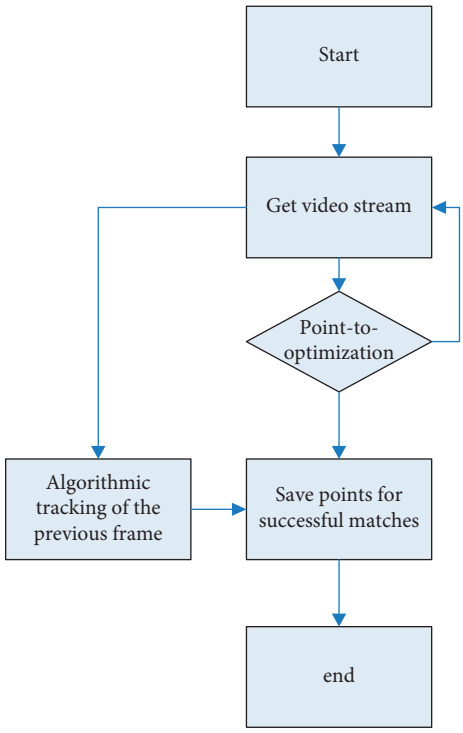

Figure 6: The detection and tracking module of feature points.

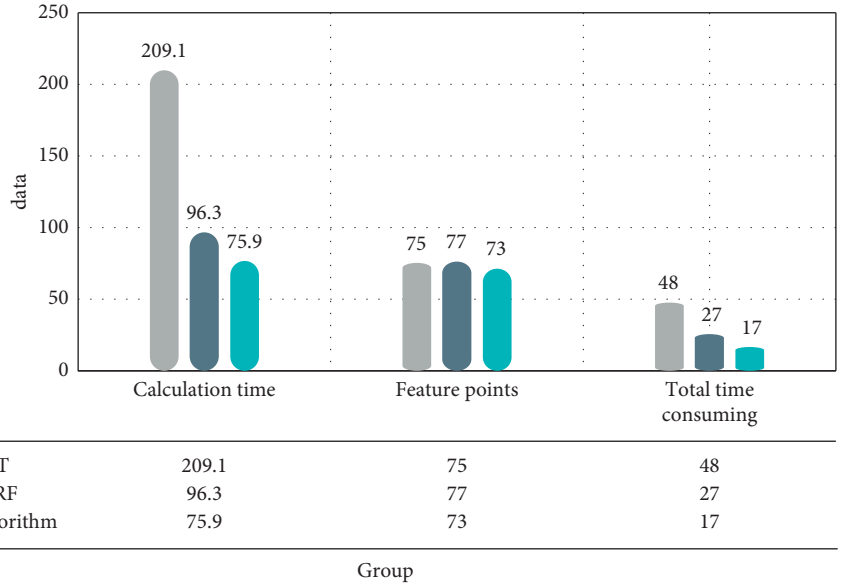

Figure 7: Comparison of three feature point detection algorithms.

Table 4: Comparison of the number of feature points extracted.

algorithm	SIFT	SURF	Algorithm
Picture group 1	669/181	717/153	203/42
Picture group 2	1409/1338	893/922	954/1248
Picture group 3	23	17	8
Picture group 4	64	54	46

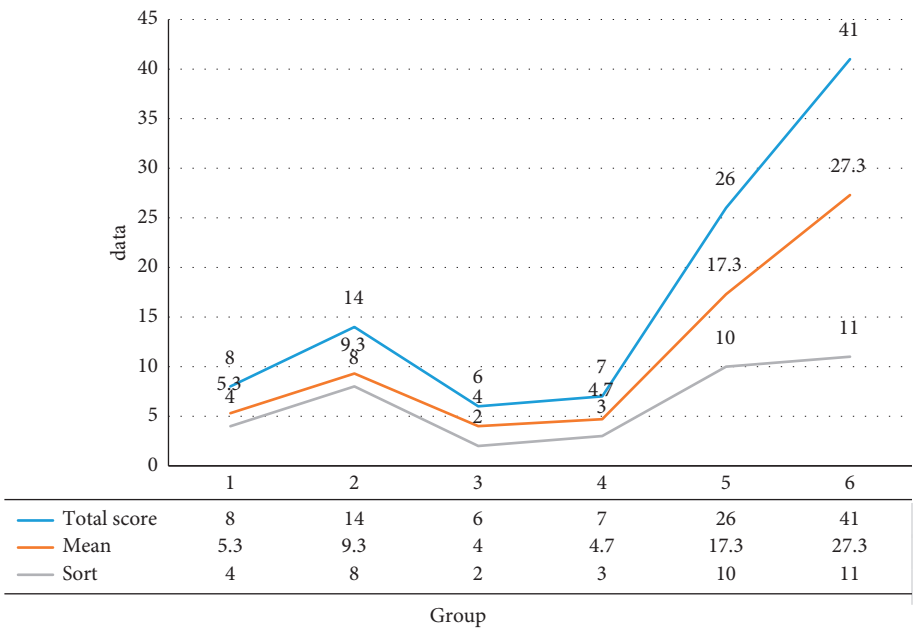

Figure 8: The sorting results of the mean analysis of the original data.

experimental results in Section 3, which has better accuracy, and it is time consuming. It is also relatively few, so under the premise of ensuring rapidity, the method in this paper ensures the accuracy and time cost of matching as much as possible.

From the data in Table 4, we can see that through SIFT, SURF, and the algorithm of this article, the number of feature points extracted, the number of feature point pairs that can be matched, and the length of the running time are compared. After analysis, we can see that the SIFT algorithm in this paper is significantly better than the remaining two in the number of feature points extracted.

As shown in Figure 8, the ease of use index is first analyzed. Except for the sensory experience index, the average value of other indicators is less than 1, which is a project with better ease of use. On the whole, the overall ease of use of the system is good, with the scores of all indicators being below 1 except for the sensory experience, and it is worth noting that in the sensory experience with poor performance, the visual and auditory effects scores are higher. If it is small, it means that the audiovisual effect of this system is very good. The reason for the poor sensory experience is mainly due to the high score of the problem caused by the dizziness, which increases the overall index score. The vertigo is a common problem in all virtual reality products. Due to the particularity of the experience environment of virtual reality products, users must wear a specific device to experience it. At this stage, the technology and quality of experience hardware devices cannot eliminate the vertigo. As far as the system itself is concerned, the ease of use has reached the set goals in all indicators.

5. Conclusions

Public art, as the artwork closest to the lives of ordinary people, as an important part of the basic aesthetics that affects the next generation of children in our motherland, has been valued by more and more people. However, in the process of rapid urban development, the quality problems caused by public art have become more and more serious. Through thinking about public art expression forms and development status, the author researches and discusses the creation and display methods of virtual reality technology involved in public art and explores innovative ways of public art design application. Research has found that VR and AR technologies can not only provide immersive and intuitive innovative experience methods for public art, but also build a new technology platform and expression method for public art design. In addition, virtual reality technology builds a bridge of communication and exchanges between public art creators, the government and the public, enabling the public to participate more in urban construction, which will also herald the direction of public art towards more openness and go in a more democratic and free direction.

Somatosensory interactive applications based on virtual reality technology are continuously being introduced, but virtual reality technology is not yet mature, and virtual reality technology is still in the stage of technological research. In the production and development process of this system, since a lot of time and energy are spent on simulation and experiment, and the newer virtual reality technology is used in the system, there is less research on reference documents with close content and technology. Therefore, the research and development of a series of somatosensory interactive applications based on virtual reality technology to deal with the inheritance and protection of intangible cultural heritage are still on the way.

Data Availability

No data were used to support this study.

Conflicts of Interest

The author of this article has no conflicts of interest.

Authors' Contributions

Shukui Song wrote and edited the article, as well as performed data analysis.

Acknowledgments

This work was supported by the Liaoning Province Natural Science Foundation Guidance Program Project Research on the application of interactive dynamic public art products based on augmented reality technology (2019-ZD-0353).

References

[1] L. S. G. Sukhpa and S. Arash, "Security-aware autonomic allocation of cloud resources: a model, research trends, and future directions," *Journal of Organizational and End User Computing*, vol. 32, no. 3, p. 8, 2020.

[2] G. Camille and B. Henri, "The nature and role of user beliefs regarding a website's design quality," *Journal of Organizational and End User Computing*, vol. 32, no. 1, pp. 1–23, 2020.

[3] L. Zhang, "Research on virtual reality human-computer interaction technology based on sensors," *Journal of Beijing Institute of Graphic Communication*, vol. 26, no. 03, pp. 58-59+62, 2018.

[4] G. Xu, "Interactive installation-a new space for public art expression," *Science and Technology Vision*, vol. 000, no. 025, pp. 79-80, 2018.

[5] L. Ming and Z. Wen, "The distance of the heart-auditory interactive device," *Art Grand View*, vol. 000, no. 019, pp. 1-2, 2019.

[6] Y. Qiao, "Analysis of individual presentation and talent agglomeration of the fusion of art and technology-comment on "new media installation: technological innovation in public art," *Science and Technology Management Research*, vol. 450, no. 8, Article ID 287, 2020.

[7] P. Zhang, "Research on the application of virtual reality technology in public art design and exhibition," *Industrial Design*, vol. 159, no. 10, pp. 138-139, 2019.

[8] C. Ni, "The design of public art in the context of "cross-border dialogue"," *Design*, vol. 23, no. 80, pp. 62-63, 2017.

[9] J. Che, "Exploring the participation experience of public art in space-taking "interactive" installation art as an example," *Tokyo Literature*, vol. 000, no. 11, pp. 178-179, 2018.

[10] Warmth, "Analyze contemporary public art based on active styling consciousness—taking interactive space installations as an example," *Beauty and Times·City*, vol. 2, pp. 70-71, 2020.

[11] F. Jin, "Research on the interactive application of dynamic installations in public art," *Fine Arts Literature*, vol. 000, no. 008, pp. 54-55, 2019.

[12] S. Zhang, "Based on the application of modern multimedia technology in landscape design," *Artwork Jian*, vol. 000, no. 11X, pp. 65-66, 2017.

[13] W. Wang and J. Li, ""Objective" space-interaction study of installation art in contemporary urban space," *Beauty and Times: City*, vol. 000, no. 008, pp. 69-70, 2016.

[14] H. Rui, "Humanistic care under technological innovation: interpretation of new media installations in urban public spaces," *Beauty and Times·City*, vol. 000, no. 001, pp. 74-75, 2019.

[15] X. Han, "Research and practice on the media role of emotional experience in installation art," *Comparative Research on Cultural Innovation*, vol. 3, no. 09, pp. 171-172, 2019.

[16] Y. Yao and L. Quan, "The application of interactive design in urban public space under the background of artificial intelligence," *Ju She*, vol. 000, no. 025, Article ID 105, 2019.

[17] C. Li, "Information dissemination of interactive media art under the perspective of new media," *Science & Technology Communication*, vol. 010, no. 020, pp. 12-13, 2018.

[18] S. He, "Research on the design of installation art based on interactive multimedia technology," *Industry and Technology Forum*, vol. 17, no. 13, pp. 52-53, 2018.

[19] Y. Tang, H. Yuan, and Y. Wan, "Research on display technology combining multimedia technology and interactive installations of physical exhibits-Taking "Jiaolong" manned submersible interactive display technology research as an example," *Science and Technology Innovation Guide*, vol. 15, no. 05, pp. 256-257+260, 2018.

[20] Yi Zhu, "The value and application of parametric intelligent design in contemporary public art," *Popular Literature*, vol. 475, no. 01, pp. 52–54, 2020.

[21] J. Li and G. Wang, "Application research of parametric design in public art design," *Art Education*, vol. 000, no. 007, pp. 270-271, 2019.

[22] S. Wang, "The development trend of virtualization in the combination of public art and technology," *Chinese Literary and Artist*, vol. 000, no. 012, pp. 284-285, 2019.

[23] Y. Sun, "Research on the intervention of multimedia interactive installation art in public space," *Tomorrow's Fashion*, vol. 000, no. 016, pp. 138-139, 2019.

[24] S. B. Robin and S. C. Narendra, "Pragmatic sensory data semantics with service-oriented computing," *Journal of Organizational and End User Computing*, vol. 31, no. 2, 2019.

[25] L. Zhi, X. Cen, and X. Wang, "Analysis of the composition environment of parametric semiotics in virtual reality technology," *Journal of Guilin Institute of Aeronautics and Astronautics*, vol. 24, no. 93, pp. 152–155, 2019.

[26] X. Tang, "Research on the application of virtual reality technology in future architectural design," *Architectural Technology Development*, vol. 045, no. 015, pp. 1-2, 2018.

[27] L. Zhang, "Research on the integration of multi-media interactive technology and installation art design-Taking

"Huge" as an example," *Fine Arts Literature*, vol. 000, no. 010, pp. 96-97, 2018.

[28] L. Lin and L. Zhan, "On the application of parametric design in the field of public art," *Western Leather*, vol. 42, no. 481, pp. 54-55, 2020.

[29] Y. Li, P. Lin, and X. Wang, "Research on campus public art design of colleges and universities from the perspective of aesthetics-Taking colleges and universities in Hebei Province as an example," *Journal of Hezhou University*, vol. 36, no. 121, pp. 153–157, 2020.

[30] W. Xie and C. Xu, "Research on the application of open source hardware platform in the prototype design of public interactive devices," *Wireless Internet Technology*, vol. 16, no. 7, pp. 101–104, 2019.

[31] Z. Zhao, "Discussion on the interaction of interactive video installation art from the perspective of new media art," *Communication Research*, vol. 3, no. 36, Article ID 285, 2019.

[32] L. Qi, "Volleyball action extraction and dynamic recognition based on gait tactile sensor," *Journal of Sensors*, vol. 2021, Article ID 9204123, 11 pages, 2021.