Hindawi
Mobile Information Systems
Volume 2022, Article ID 2787848, 16 pages
https://doi.org/10.1155/2022/2787848

Research Article

Evaluating the Impact of a Mobile Gaming System on the Collaborative Learning Process in a Hospitality Business Simulator

Cevin Zhang [1,2]

[1] *School of Media and Design, Beijing Technology and Business University, Beijing 102488, China*
[2] *Avdelningen för Hälsoinformatik Och Logistik, Kungliga Tekniska Högskolan, Stockholm 10044, Sweden*

Correspondence should be addressed to Cevin Zhang; chenzh@kth.se

Received 8 February 2022; Accepted 22 February 2022; Published 30 March 2022

Academic Editor: César A. Collazos

Simulation-based pedagogy is fully considered when designing collaborative learning processes. However, particularly for training managerial skills in hospitality industries, limited work has been performed on analysing the impact of business simulations in the direction of a mobile gaming system. This paper presents a tablet gaming setup for a hospitality business simulator representing tourist flow characteristics, resource management, and the interaction of actors based on a competition relationship among hotel chain operators involved in the hospitality industry. The mobile gaming system was tested in game-based learning exercises, as in distance and classroom learning case studies, following identically parameterised scenarios. First, survey scores were collected using the self-report Learning Experience and Outcomes Questionnaire to evaluate ubiquitous human mobile-web interaction. Second, lag sequential analysis was employed to examine learning effects. Finally, a regression analysis was carried out to understand whether mobile gaming behaviours were likely to predict hotel performance as the outcome of the collaborative learning process. A total of 90 graduate students participated in game-based learning sessions in the autumn and spring semesters of 2020 and 2021, respectively. For the self-efficacy section, there were no significant differences in the scores. Sixty percent of the scored items in the classroom learning case study outperformed those in distance learning. Face-to-face participation enables more interaction between participants and mobile devices. The regression analysis delivered a $\triangle R^2$ of 0.43 ($F_{4,31} = 7.56$, $P < 0.001$) for the classroom learning case study and 0.49 ($F_{4,47} = 13.19$, $P < 0.001$) for the distance learning case study. The significant correlation between changes in hotel performance and learning behaviours could be attributed to the collaborative learning process. A business simulator powered by a well-designed mobile gaming system could be used to improve hospitality management.

1. Introduction

Mobile gaming systems in education strive to integrate situations, active learning, and social dynamics in an allegorically informed visual-audio environment [1]. Despite its rapidly changing technological components, educational mobile games offer an opportunity to revise the learning process [2]. Here, the intended learning outcomes are closely connected with the overall design of the game [3], player behaviours [4], and human mobile-web interactions [5].

The instruction method to encourage learners to work together towards a common goal, bearing in mind the positive interdependence [6], is collaborative learning that achieves the intended goals via a group-based setting [7]. Improved problem-solving skills, increased respect, becoming better team members, and improved understanding of the course content are benefits of collaborative learning in medicine [8], health care [9], electronic services [10], crisis preparedness [11], and information management [12], which require effective communication, shared institutions, and leadership from diverse perspectives. Digital games [13], mobile applications [14], augmented reality [15], and simulators [16] are productive environments that capitalise on these skills.

Business simulators are defined as simulations, games, and experimental techniques as teaching methods in business, management, and related fields [17]. They deliver a sequential decision-making exercise structured around a business intelligence model in which participants assume responsibility for operation management [18], which plays an important role in extending the case study teaching method to feature the projection of players into the gamified version of the whole experience [19]. An early example was the "Top Management Decision Simulation," after which the majority of US business schools used gaming techniques in lectures [20].

Business simulations characterise a type of gaming media that can address strategic and operational decision-making. Recent business simulations have relied on corporate training to understand fundamental economic and operational theories for administering service-based organisations [21, 22]. As the most remarkable exercise in a classroom setting, the Beer Distribution Game, originally a board game, illustrates the system dynamics of food distribution systems [23], in particular, the "bullwhip" effect observed in real operations [24]. Subsequently, the board game format evolved into more recent screen-based simulations [25].

A recent opportunity that has opened up embraces mobile systems, while they play in a way that supports the collaborative learning process, specifically if the task is in the request of teamwork coordination. While the conventional approach is for human-computer interaction to occur on the computer screen, it is worthwhile to note that a higher proportion of effective learning today already takes place on the tactile screen. Interaction design elements such as numbers [26], sliders [27], and selections are, in most cases, the most frequently employed channels for sending values but are rarely elucidated with the learning experience enabled by mobile devices. Progress is in the intersection of gaming and learning calls for the quantitative analysis of mobile gaming systems. In this regard, motivation theory on learning serves as an appropriate design framework for a one-to-one correspondence between psychological needs and a collaborative learning process [28].

Provided these compelling evidences, this study poses the following research question:

(1) Does a mobile gaming system over business simulation assist participants in realising collaborative learning?

To answer this research question, this study evaluated its impact on a hospitality business simulator (Figure 1). Based on proxy attributes in human mobile-web interactions, a regression model was used to evaluate the association between variables. Specifically, behavioural transition graphs were plotted using lag sequential analysis. The remainder of this paper is organised as follows: methods to measure proxy attributes in human mobile-web interaction, investigate the association between variables, and present the theory of lag sequential analysis are presented in Section 2. The game-based sessions in both case studies are presented in Section 3, followed by their application to the hospitality management simulator (Section 4). The paper concludes with a critical discussion of practical implications (Section 5) and suggestions for further studies (Section 6).

2. Methodology

Through practical implementation of the required activities and tasks in a hospitality business simulator, the collaborative learning process was designed to motivate participants to exercise relevant management skills to assure quality services. More specifically, updates on hotel performance strive to raise awareness and understand the dynamics of the hotel industry. While game-based studies are largely based on meeting the cognitive and social relevance needs of players in the field of mobile learning [30], the design of this study is anchored in the reinforcement theory of motivation. This theory was pioneered in skills training in practical production settings for health care and logistics [31].

Motivational reinforcement theory is concerned with the consequences to individuals when undertaking actions to align with organisational objectives. Positive and negative reinforcement mechanisms are integrated into all the hotel performance indicators. If participants indicate the optimal choice in relation to tourist flow in the simulated environment, the frequent features of gamification schemes exploit decisions in accordance with the intended outcomes. Positive feedback is then provided as a result of revisiting the same destination and increasing levels of customer satisfaction, which translates into excellent financial outcomes for hospitality service providers.

It is worthwhile to note that the collaborative learning environment outlined above will not accomplish its intended outcomes if human-mobile interaction is not accurately measured. Therefore, to measure human-mobile interaction, this study experimented with the following game activities to characterise the active participation as well as the effectiveness of gameplays (Figure 2). First, the game roles were overseen. The players address supply insufficiency issues by inserting the exact number of planned rooms, hotel prices, and selecting a more advanced interior decoration level. Therefore, player input is measured by the number of updates based on market variations, customer demand, and hotel operations. Moreover, we measured the decision-making process. The purpose was to indicate the player's focus in delivering customer-centred values. Only reasoning among possible alternative options until prompt action leads to increased levels of customer satisfaction. Last but not least, we assessed the effect of game mechanism on succeeding behaviours that have not been activated previously. Figure 2 describes the mapping of the three types of game activities to human-mobile interactions, bearing in mind the psychological requirements. This undermines the business simulation course to induce effective learning of managerial skills, especially when predicting hotel performance.

2.1. Lag Sequential Analysis: Theory and Application. Sackett introduced lag sequential analysis in 1978 to identify the probability of one behaviour occurring subsequent to another and its statistical significance [33]. This

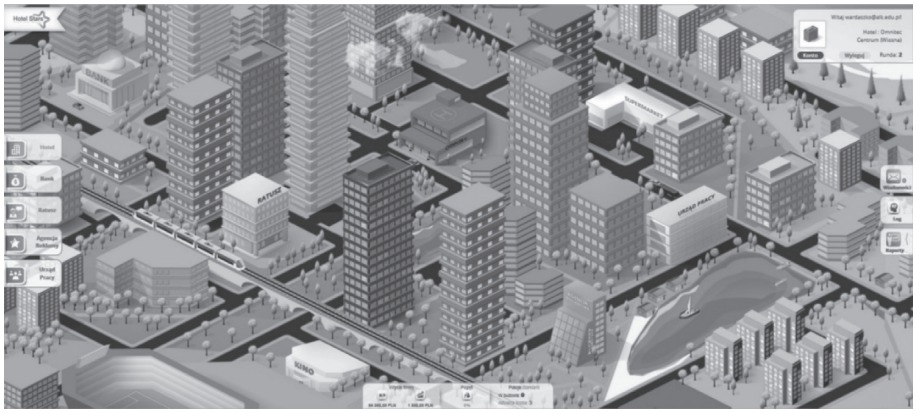

Figure 1: The homepage of the hospitality business simulator displayed on the mobile interface [29].

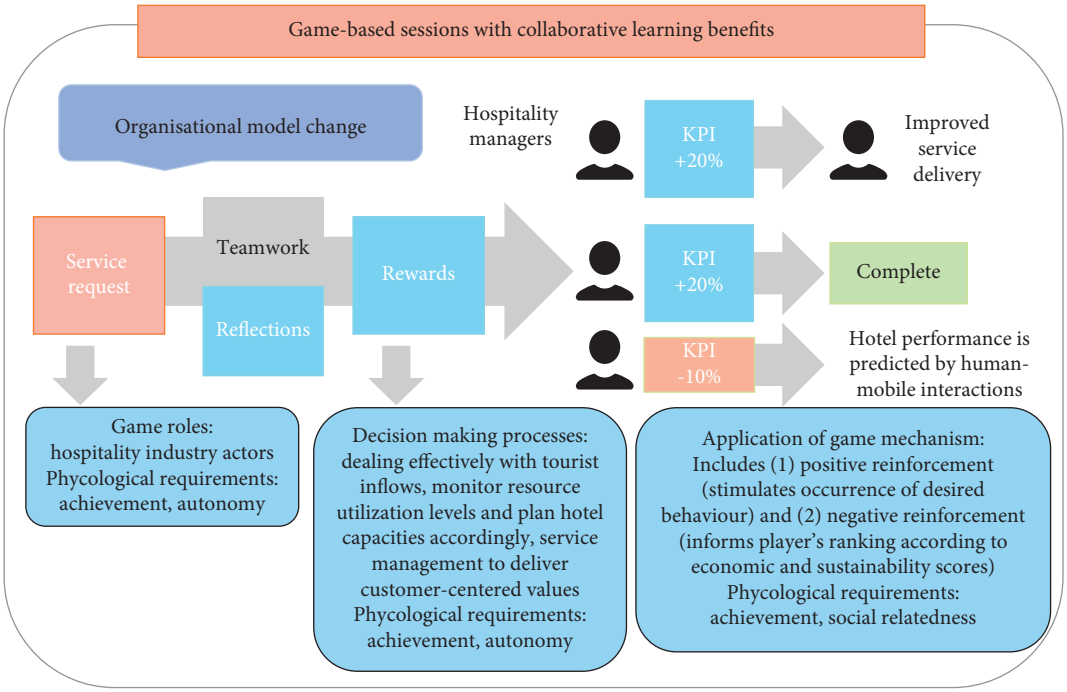

Figure 2: Flowchart of the hospitality management simulation based on the reinforcement theory of motivation [32].

methodology has been adapted to analyse pathways in medicine [34], optimise online learning experiences in educational science [35], and analyse players' proxy attributes in digital games [36]. Owing to its application to any time-sequenced series of dichotomous codes, lag sequential analysis is accepted in the field of behaviour analysis, enabling researchers and pedagogues to pinpoint subtle transition patterns. This brings in the benefits of technology-enhanced learning from a behavioural perspective to inform the design of collaborative learning processes. The remainder of this section presents the theoretical background.

The analysis assumes that the events are sequenced in a time series [37], which is a collection of data labelled by the period in which observations occur. In general, we begin gathering data from a specific time to another stamp. This can be represented as

$$(\ldots, y_1, y_2, \ldots, y_T, \ldots) = \{y_t\}_{t=-\infty}^{t=+\infty}. \quad (1)$$

x_t is a time series assigned to the transformation relation $y_t = \beta x_t$. This operator converts the event from each period by multiplying it by a constant to obtain a new time series:

An operator serves as a lag operator, denoted L, if it converts the previous period's event of a time series into that of the current period; that is, for any time series x_t, the lag operator satisfies

$$L(x_t) \equiv x_{t-1}. \quad (2)$$

Analogously, it is possible to define a higher-order lag operator; for example, a second-order lag operator denoted L^2. For any time series x_t, the second-order lag operator satisfies

$$L^2(x_t) \equiv L[L(x_t)] = x_{t-2}. \tag{3}$$

For any positive integer k, we have

$$L^k(x_t) = x_{t-k}. \tag{4}$$

The first-order difference equation can be expressed in lag operator form, as shown in equation (5). Equation (6) shows an identical expression:

$$\begin{aligned} y_t &= \phi y_{t-1} + w_t \\ &= \phi L y_t + w_t, \end{aligned} \tag{5}$$

$$(1 - \phi L) y_t = w_t. \tag{6}$$

Applying arithmetic $(1 + \phi L + \phi^2 L^2 + \cdots + \phi^t L^t)$ simultaneously on both sides of the above equation, we obtain

$$\left(1 + \phi L + \cdots + \phi^t L^t\right)(1 - \phi L) y_t = \left(1 + \phi L + \cdots + \phi^t L^t\right) w_t. \tag{7}$$

According to properties of the lag operator, we get

$$y_t = \phi^{t+1} y_{t-1} + w_t + \phi w_{t-1} + \cdots + \phi^t w_0. \tag{8}$$

If the time series y_t is bounded, there exists a finite constant M such that at any time $|y_t| \leq M$ and $|\phi| < 1$. The trailing term in the above equation tends to zero as time increases. Therefore, we have

$$\lim_{t \longrightarrow \infty} \left[\left(1 + \phi L + \cdots + \phi^t L^t\right)\right](1 - \phi L) y_t = y_t. \tag{9}$$

For any given time series y_t, we have

$$\begin{aligned} (1 - \phi L)^{-1} y_t &= \sum_{j=0}^{\infty} \phi^j L^j (y_t) \\ &= \sum_{j=0}^{\infty} \phi^j y_{t-j}. \end{aligned} \tag{10}$$

If time series y_t is bounded, the solution of the first-order difference equation can be expressed as equation (11). For any real number a_0, the expression in (12) is a solution.

$$\begin{aligned} y_t &= w_t + \phi w_{t-1} + \phi^2 w_{t-2} + \cdots \\ &= \sum_{j=0}^{\infty} \phi^j w_{t-j}, \end{aligned} \tag{11}$$

$$y_t = a_0 \phi^t + \sum_{j=0}^{\infty} \phi^j w_{t-j}. \tag{12}$$

The solution to the difference equation comprises the coefficients to be determined. Once the interactions registered by the user, as recorded events in the gaming system, were coded according to the behavioural types, the probabilities were calculated as the transitions from one event to another were tabulated from overlapped sampling.

Z-scores were measured for the links to determine the significance of the probabilities. To this end, the adjusted residual equation proposed by Backman and Gottman is deployed:

$$z_{i \longrightarrow j} = \frac{p_{ij} - e_{ij}}{\sqrt{e_{ij}\left(1 - \Gamma_{i+}/N\right)\left(1 - \Gamma_{+j}/N\right)}}, \tag{13}$$

where p_{ij} is the pragmatic number; e_{ij} is the expected number of transitions from behaviour i to j; Γ_{i+} is the observed counts of the i-th row; Γ_{+j} is the observed counts for the j-th column; and N is the number of transactions in the table.

2.2. Categorisation of Log Files. Log files were used to study the interaction sequences in the greatest detail. Behaviour coding was performed in accordance with Table 1. Depending on the content of the business simulator and the research question, adjustments were made to the behavioural schemes used in previous studies. This is due to the fact that the mobile gaming system already decides the nature of interactive participation. For example, if the system does not allow a wide variety of categories, that is, editing specific profiles, then this classification is aborted. Seen from the limited options, this is an advantage, providing that it emphasises learning. The initial datasets were automatically exported from the simulator. The raw dataset was then created by transcribing the log files into proxy attributes. The hotel performance-dependent variable was calculated as the sum of the scores for the economy, sustainability, and work environment satisfaction.

2.3. Learning Experience Analysis Based on the Questionnaire. At the end of the game, each player was instrumented to respond to the Learning Experience and Outcomes Questionnaire (LEOQ) to obtain information on the role of the mobile game-based collaborative learning process in conveying hospitality managerial skills. The skills were categorised according to the construct of searching, planning, marshalling, implementing-people, implementing-financial, and attitude towards venturing as self-report measures, totalling 22 items. This self-report survey has been validated in a prior study investigating the impact of flow experience on learning performance [38], and the authors demonstrated the reliability of player perceptions when situated in simulation-based learning. Subsequently, players registered their degree of compliments with the remaining 28 statements on challenge-skill balance, playability, goal, feedback, and control. Each item was scored on a 7-point Likert scale (1 = "strongly disagree" to 7 = "strongly agree").

3. Game-Based Learning Practices

The players in the case studies were recruited from graduate courses at Beijing Technology and Business University. Ninety students joined the hospitability business simulator in the autumn semester of 2020 and the spring semester of 2021. The diverse background and even gender distribution offered an edge in analysing the real impact of interactive participation on learning outcomes. In the case studies, the

Table 1: Coding guidelines of gaming behaviours in the hospitality business simulator.

Catalogue and item		Behaviour (code)	Note
Managing resources	Optimising utilisation of hospitality infrastructure	Hotel investment (HI)	Buying and selling real estate
		Hotel equipment (HP)	Provision of disposable amenities
		Hotel price (HP)	Decision on prices for each type of accommodation
	Managing services and functions	Hotel service (HS)	Coordinating cleaning services
		Hotel basic service (HBS)	Supply of value-added service options
		Hotel advanced service (HAS)	Supply of service options with special interests
		Hotel crew (HC)	Addressing employment and work environment issues
Inviting cooperation	Inviting institutional cooperation	Cityhall project (CP)	Sponsoring external events
		Bank loan (BL)	Engagement with borrowing and saving
		Market research (MR)	Gathering tourist's preferences
	Promoting brand presence	Hotel self-promotion (HSP)	Publicizing oneself via webpages
		Local advertisement (LA)	Targeting audiences close to the tourism destination
		Regional advertisement (RA)	Broadcasting in certain cities
		National advertisement (NA)	Marketing throughout various channels

players had no previous experience in business simulators and were novice users.

In either course, as presented in Figure 3, the hotel receives a seasonal volume of incoming visitors for hospitalisation each season based on the destination's tourism popularity, and updates should be handled as a preparation for the operation by players for a wide variety of hotel attributes. The visitors who chose to stay at the hotel were taken care of by the employees and administrative staff who were recruited to work in the tourism destination. The session lasted 16 rounds, representing four full financial years in real-time. Each financial year was assigned a fully pledged challenge, requiring planned upgrades to growing competition in the multipolar tourism market. A portable Samsung Tablet A7 Lite T220 was deployed in both case studies.

3.1. First Case Study: Distance Learning. The first case study was administered via a mobile gaming system, whereby the players were not physically present in the classroom. The game requires interactive participation from four players: facility management, marketing, service delivery, and public relations.

3.2. Second Case Study: Classroom Learning. The second case study took place via physical presentation with the same distribution of tasks, activities, and players. The players were granted a total atmosphere as a social group in face-to-face communication. This structure potentially affects student learning. It is noteworthy that the actual game parameters are identical.

4. Results

The gameplay saw 8,854 entries of human-mobile interactions generated from the mobile gaming system. Players had an average age of 21.74 (SD 2.09) years, held a background in engineering and design, and spent 214 hours with the hospitality business simulator.

4.1. Entrepreneurial Self-Efficacy Questionnaire. In view of the distance learning case study, all participants indicated that the game gave rise to comprehension of leadership skills and a rightful attitude towards learning, as Figure 4 illustrates. We can see from the graph that the "Implementing-people" presented high scores at "Inspire, encourage and motivate" and "Train employees" in comparison with the rest components. "Attitude towards venturing" was made up of average values at 5.60, 5.30, and 5.53, respectively. More specifically, touching upon business management was considered "Worthwhile, Rewarding, and "Positive," whereas there was the potential for growing confidence in skills. More players were confident to "Networking-making contact with others," "Get others to identify with my vision," and "Clearly explain my business idea," as the average scores for these items stood at 4.51, 4.26, and 4.42. In contrast, although "Design a new product or service" was rated 3.05, "Brainstorming with new idea for product" and "Identify the need for a new product" were graded with values below 3. No significant item-specific differences were identified within any block of questions.

The graph in Figure 5 describes the values of the items as per the questionnaire construct in the classroom learning case study. Clearly, 16 out of the 22 items scored higher than in the previous trials. The boxes demonstrated that "Implementing-people" was associated with the most diverse results (4.83, 4.39, 4.59, 4.24, 4.57, and 4.91 for "Supervise employees," "Recruit and hire employees," "Delegate tasks and responsibilities," "Deal effectively with daily problems," "Inspire, encourage and motivate," and "Train employees," respectively). While searching as a whole was the least valued block, "design a new product or service" remained the most popular item. This was followed by "Networking" (4.46) and "Get others to identify with my vision" (4.35). "Implementing-financial," on the other hand, were not rated very high among the constructs (4.37, 4.07, and 4.11 for "Organise and maintain finance," "Manage the financial assets," and "Interpret financial statements," respectively). "Marshalling," however, showed relatively forthcoming average values, from 4.33 for "Determine a competitive price" to 4.67 for "Estimate customer's product demand."

4.2. Lag Sequential Analysis of Learning Behaviours. It is clear from the chart in Figure 6 that a consequential chain existed among the behavioural objects. During the simulation of the first financial year, participants had at their disposal managing hotel equipment (hotel investment ⟶ hotel equipment: z-score of 7.29 for the distance learning case study and 8.75 for the classroom learning case study, respectively), updating hotel prices (hotel investment ⟶ hotel price: z-score of 4.56 for the distance learning case study only), and sponsoring cityhall projects (hotel investment ⟶ cityhall project: z-score of 2.00 for the distance learning case study only). Over the time span, the participant would have the option to access updating hotel prices (hotel equipment ⟶ hotel prices: z-score of 6.29 for the distance learning case study and 7.08 for the classroom learning case study) and further engaged managing hotel services (hotel prices ⟶ hotel services: z-score of 2.30 for the distance learning case study and 2.92 for the classroom learning case study). Thereafter, hotel self-promotion (hotel services ⟶ hotel self-promotion: z-score of 4.06 for the distance learning case study and 2.13 for the classroom learning case study, respectively). Hotel basic services were provisionally accompanied by market research (hotel basic service-⟶ market research: z-score of 2.25 for the classroom learning case study only), while the latter would proceed to hotel investment (market research ⟶ hotel investment: z-score of 13.72 for the classroom learning case study only). During the collaborative learning process, participants adopted continuous and consistent actions after receiving updates on tourist flow and operational conditions, thus activating higher-order learning behaviours.

As shown in the graph in Figure 7, long behavioural chains were superseded by shorter paths during the simulation of the second financial year. Bank loan pathed to hotel

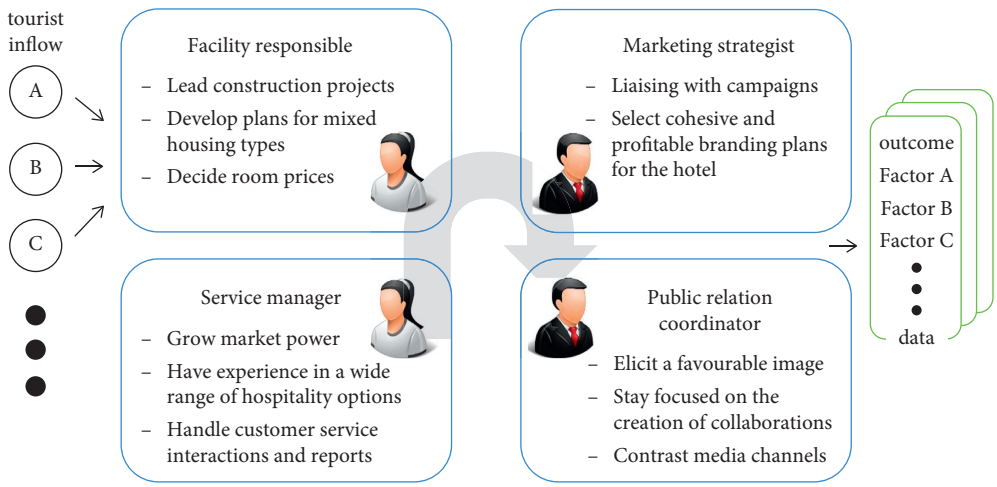

Figure 3: Observation of game roles and accountability frameworks in both case studies.

investment (bank loan ⟶ hotel investment: z-score of 2.40 for the distance learning case study and 3.94 for the classroom learning case study) and thereafter associated with either market research (hotel investment ⟶ market research: z-score of 2.39 for the distance learning case study) or hotel prices (hotel investment ⟶ hotel prices: z-score of 2.01 for the distance learning case study and 2.95 for the classroom learning case study). More specifically, there was a path from hotel investment to bank loan (hotel investment ⟶ bank loan: z-score of 3.21 for the distance learning case study). Hotel prices appeared to be the destination occurrence following hotel equipment (hotel equipment ⟶ hotel prices: z-score of 3.85 for the distance learning case study). Hotel basic service and cityhall projects presented a two-way significant relationship (hotel basic service ⟶ cityhall project: z-score of 4.18 for the distance learning case study; cityhall project ⟶ hotel basic service: z-score of 2.07 for the classroom learning case study). On the other hand, bank loan could also path to market research (bank loan ⟶ market research: z-score of 2.67 for the distance learning case study and 4.95 for the classroom learning case study). If market research had been reached, local advertisement (market research ⟶ local advertisement: z-score of 3.13 for the classroom learning case study) and regional advertisement (local advertisement ⟶ regional advertisement: z-score of 9.07 for the distance learning case study and 8.33 for the classroom learning case study) would be subsequent. During this stage of simulation, a conversion in learning behaviour was evident, as participants actively interacted with the gamification elements in this more complex simulation environment.

During the simulation of the third financial year, as presented in Figure 8, hotel investment stood out as one of the most frequently visited objects; it was significantly correlated with hotel price (hotel investment ⟶ hotel price: z-score of 2.26 for the distance learning case study), cityhall project (cityhall project ⟶ hotel investment: z-score of 2.35 for the classroom learning case study), and bank loan (bank loan ⟶ hotel investment: z-score of 3.08 for the distance learning case study and 2.84 for the classroom learning case study). Hotel self-promotion had a high number of outbound transitions towards hotel service (hotel self-promotion ⟶ hotel service: z-score of 3.89 for the distance learning case study) and basic hotel service (hotel self-promotion ⟶ hotel basic service: z-score of 4.74 for the distance learning case study and 1.97 for the classroom learning case study, respectively). In marketing behaviours, local advertisements could either proceed to regional advisement (local advertisement ⟶ regional advertisement: z-score of 7.57 for the distance learning case study and 11.23 for the classroom learning case study, respectively) or national advertisement (local advertisement ⟶ national advertisement: z-score of 5.84 for the distance learning case study). A reverse chain could also be identified (national advertisement ⟶ regional advertisement: z-score of 6.06 for the distance learning case study). The human crew was the object with no significant behavioural transitions.

Finally, examining the simulation of the third financial year found that the transitions were multifaceted, as illustrated in Figure 9. It is clear from the flowchart that the cityhall project served as the original component of many paths—it proceeded to hotel investment (cityhall project ⟶ hotel price: z-score of 2.19 for the distance learning case study only), hotel price (cityhall project ⟶ hotel investment: z-score of 2.75 for the classroom learning case study only), hotel service (cityhall project ⟶ hotel service: z-score of 3.35 for the classroom learning case study only), and hotel basic service (cityhall project ⟶ hotel basic service: z-score of 2.66 for the distance learning case study only). In addition, the cityhall project trailed to by bank loans (cityhall project ⟶ bank loan: z-score of 4.93 for the classroom learning case study only), hotel prices (hotel equipment ⟶ hotel price: z-score of 2.25 for the classroom learning case study only), hotel services (hotel equipment ⟶ hotel service: z-score of 5.16), and hotel basic service (hotel equipment ⟶ hotel basic service: z-score of 3.54 for the distance learning case study only). Market research connected bank loans (market research ⟶ bank loan: z-score of 3.78 for the distance learning case study only) and national

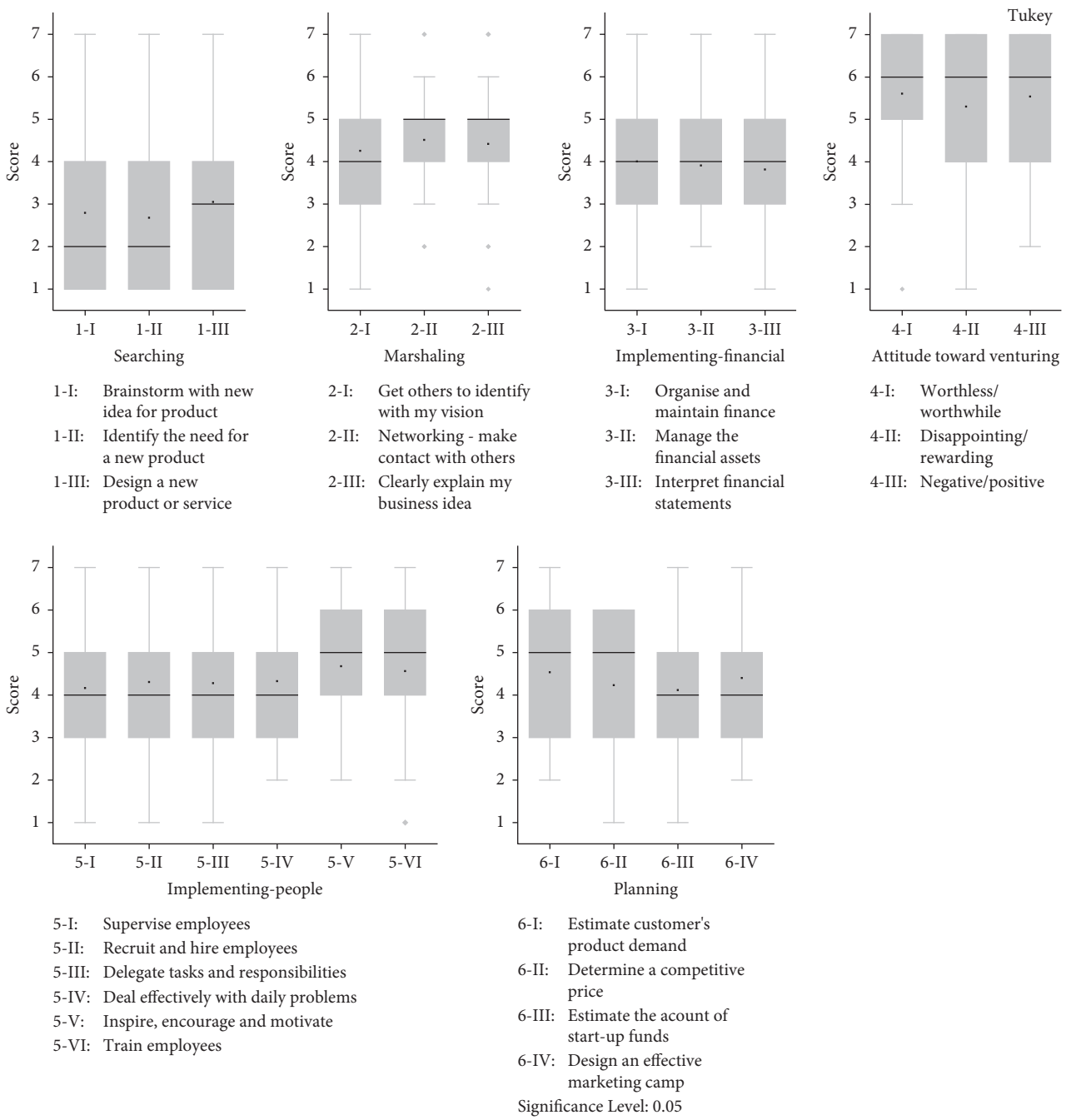

Figure 4: Participant's entrepreneurial self-efficacy questionnaire results for the distance learning case study.

advertisement (market research ⟶ national advertisement: z-score of 4.35 for the classroom learning case study only). Remarkably, local and regional advertisements interacted only with each other. Hotel basic service seemed to be the destination component; however, it also pointed to hotel self-promotion (hotel basic service ⟶ hotel self-promotion: z-score of 6.23 for the distance learning case study only). It is worth noting that no significant transitions were identified for advanced hotel services and hotel crews. The participants' synthesis, reasoning, and negotiation were revealed as they approached the later stages of the simulation.

4.3. Human Mobile-Web Interaction and Hotel Performance. The standard regression analyses for classroom learning and distance learning case studies are shown in Tables 2 and 3, respectively. The estimation yielded a ΔR^2 of 0.43 and 0.49, respectively ($F_{4,31} = 7.56$, $P < 0.001$, for the classroom learning and $F_{4,47} = 13.19$, $P < 0.001$, for the distance learning) positively anticipated hotel performances. More specifically, the same holds true for the number of entries optimising hospitality infrastructure ($\beta = 28.54$, $P = 0.045$, for the board game; $\beta = 22.45$, $P = 0.04$, for the online game), improving customer services, and inviting institutional cooperation ($\beta = 7.30$, $P = 0.01$, for the board game;

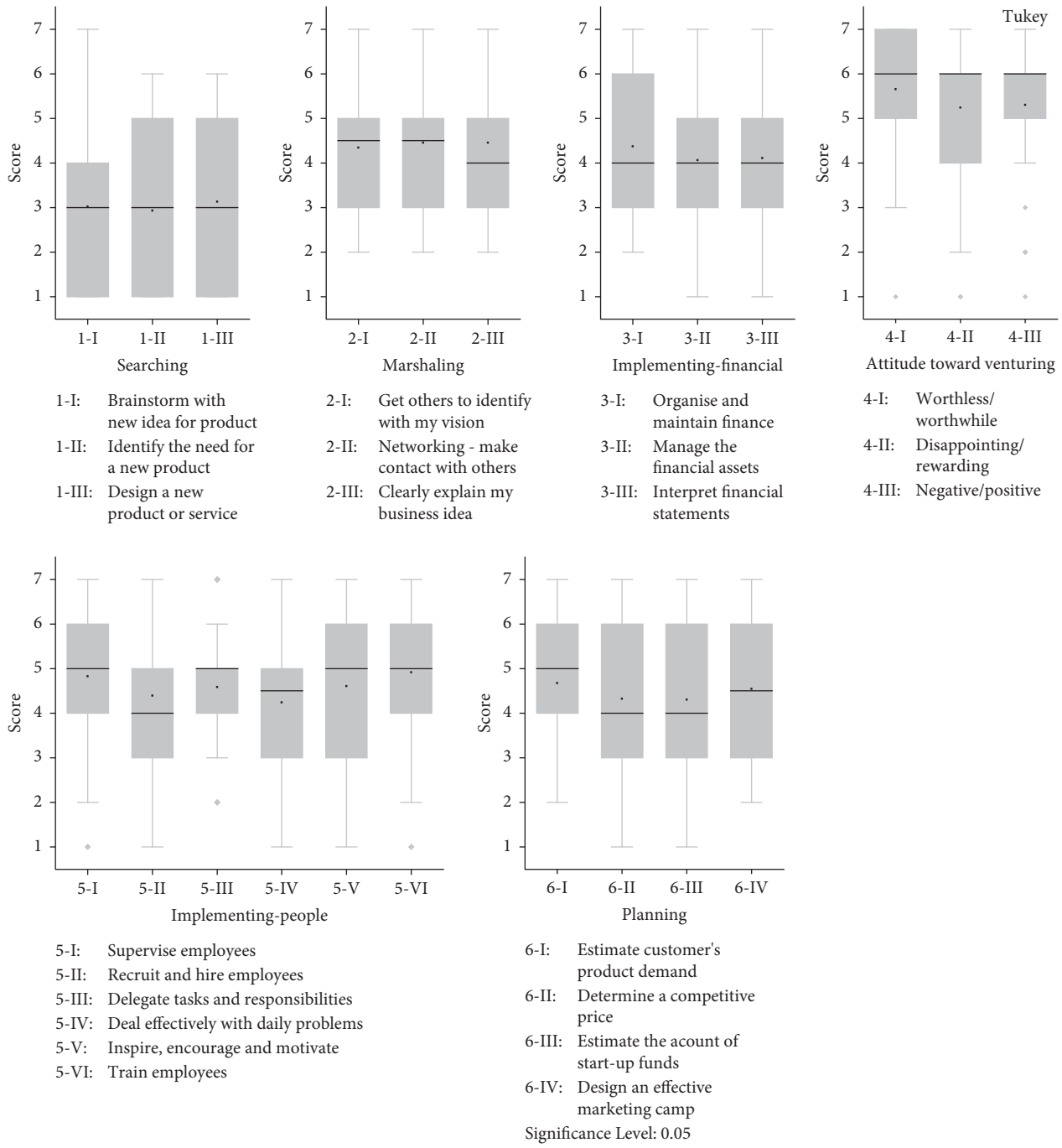

Figure 5: Participant's entrepreneurial self-efficacy questionnaire results for the classroom learning case study.

$\beta = 36.48$, $P < 0.001$, for the online game). In summary, the majority of hypotheses were accepted for serious gaming in distance learning, confirming the significant relationships between learning behaviours and hotel performance in the hospitality business simulator.

Learning performance items were scored above 4 for both case studies, indicating that this was the highest percentage of positive feedback in any construct of the questionnaire. Players offered the most positive feedback for "I can learn new skills if I use business simulation games" and "I can gain knowledge when I use business simulation games." In Figure 10, 40% of all participants supplied full credit. In contrast, scores below 4 were found in three of the four sections of the flow experience construct. First, when the participants were asked about the effort and total concentration of the mind, the proportion of positive feedback decreased. This tendency applies to items related to feelings and time distortion. A slight difference between the case studies exists in the autotelic experience section, which received average scores above 4. For questions such as "I really enjoyed the playing experience" and "I found the experience extremely rewarding," full scores represented

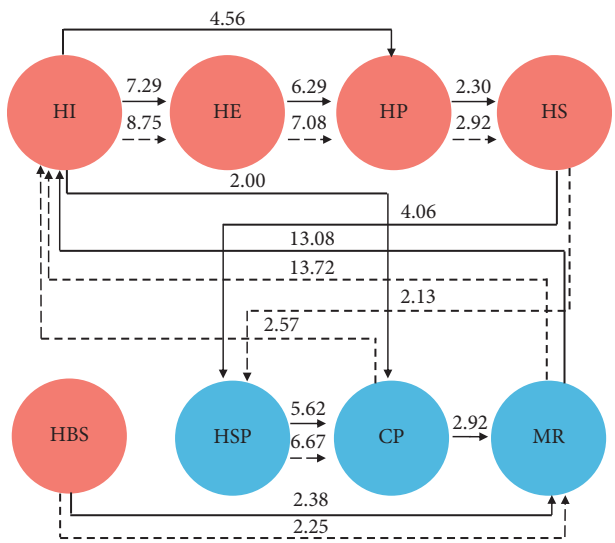

Figure 6: Behaviour transition flowchart for the first year of hospitality management. Solid lines: distance learning case study. Dash lines: classroom learning case study.

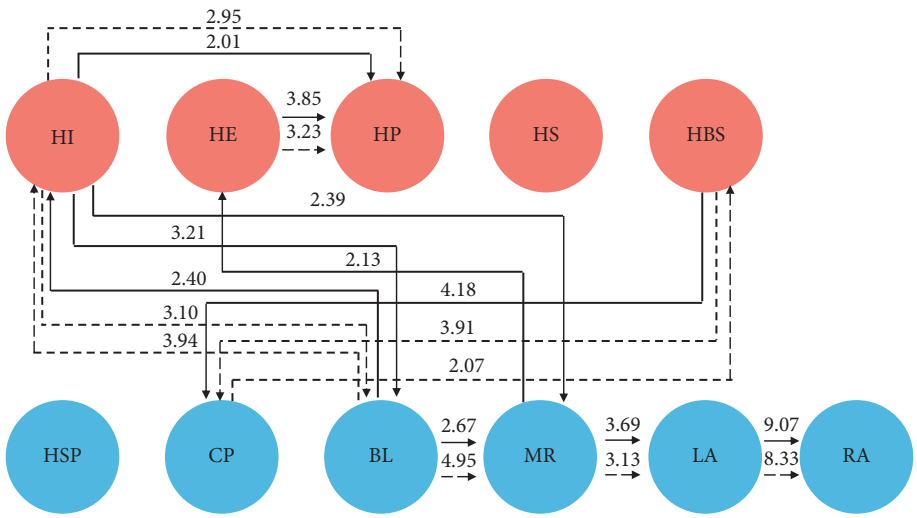

Figure 7: Behaviour transition patterns for the second year of hospitality management. Solid lines: distance learning case study. Dash lines: classroom learning case study.

about 51% of the answers. This is in remarkable contrast to only 12% for the loss of self-consciousness section.

Overall, the constructs, in addition to learning performance and flow experience, had the largest number of positive answers (nine of ten items). In Figure 11, "The challenge that the game provided and my skills were at an equally high level" had scores above 6 for both case studies. Similar profiles were found for playability, goal, and feedback constructs. For each construct, more participants took the classroom learning option than distance learning, except in the case of "Using the user interface was easy" and "I could tell by the way I was performing how well I was doing." "I felt in total control of my playing actions" had the least scores in the control construct. In fact, the more relevant the question was on learning, playability, and goals, the higher was the percentage of confidence in both cases. In comparison, control and immersion were inversely connected to engagement with the hospitality business simulator, providing that the better a hotel's performance, the stronger the dependency of participants on the collaborative learning process.

4.4. Notes of In-Game Collaboration. An examination of the interaction comments with the simulator indicated that the participants adopted a cooperation-oriented strategy in the first two fiscal years, working together to improve the performance of their units. In particular, participants were prudent about satisfying tourism needs and attempted to coordinate services as efficiently as possible. Thus, although the frequency and number of human mobile-web interactions were not as high as in the simulation of the latter two years, meaningful discussions at the beginning eventually paid off also prepared them for follow-up. With the emergence of more diverse travel needs and the possibilities offered by the combination of service

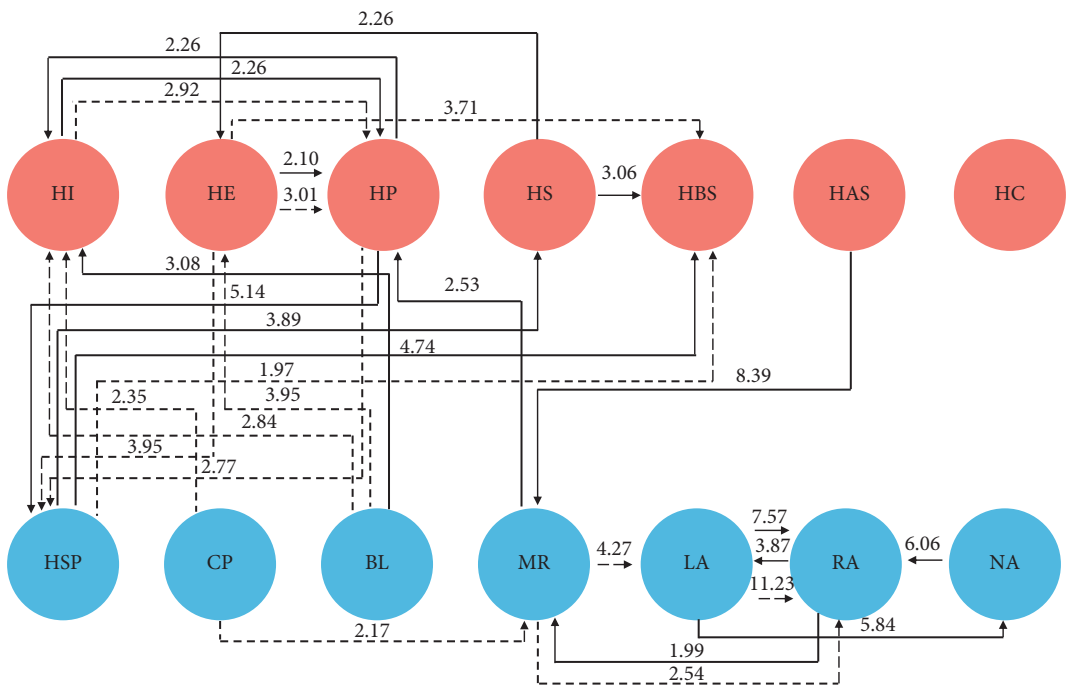

Figure 8: Behaviour transition patterns for the third year of hospitality management. Solid lines: distance learning case study. Dash lines: classroom learning case study.

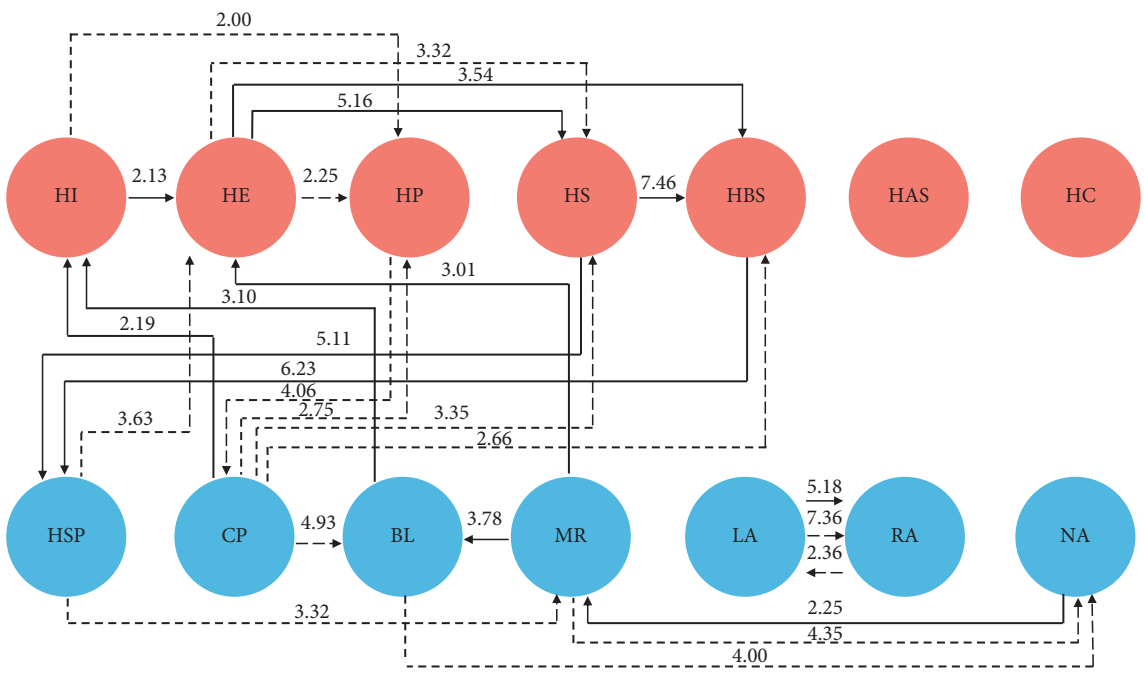

Figure 9: Behaviour transition patterns for the fourth year of hospitality management. Solid lines: distance learning case study. Dash lines: classroom learning case study.

Table 2: Regression model for predicting hotel performance based on interactive behaviours in the classroom learning case study.

Variables	R^2	$\triangle R^2$	β (SE)	P value
Hotel performance	0.49	0.43	N/A[a]	N/A
Optimise hospitality infrastructure	N/A	N/A	28.54(9.66)	0.005
Improve customer services	N/A	N/A	−0.81(5.10)	0.87
Invite institutional cooperation	N/A	N/A	7.30(29.04)	0.80
Promote brand presence	N/A	N/A	0.91(7.33)	0.90

[a]N/A: not applicable.

Table 3: Regression model for predicting hotel performance based on interactive behaviours in the distance learning case study.

Variables	R^2	$\triangle R^2$	β (SE)	P value
Hotel performance	0.53	0.49	N/A[a]	N/A
Optimise hospitality infrastructure	N/A	N/A	22.45(4.64)	<0.001
Improve customer services	N/A	N/A	−10.05(4.55)	0.03
Invite institutional cooperation	N/A	N/A	36.48(12.57)	0.006
Promote brand presence	N/A	N/A	−5.21(6.34)	0.42

[a]N/A: not applicable.

Figure 10: Average ratings of measurement in learning performance and flow experience. Case 1: distance learning; Case 2: classroom learning.

options, verbal interaction of participants gradually declined in sight; rather, a greater focus was placed on the mobile interface, visual cues, and simulation. It is worth noting that after simulating all 16 sessions, the exchange of ideas was again facilitated among participants in contrasting their successful endeavours and pitfalls. This means that the design of the collaborative learning process, overarched by the framework illustrated in Figure 2 (Section 2), facilitated an effective translation of managerial skills towards the delivery of intended outcomes. This not only supports the pillar of business simulators in collaborative learning but also demonstrates the unique advantages of using a mobile gaming system specialised in human mobile-web interaction.

5. Critical Discussion

5.1. Representative Findings. This study carried out a quantitative study of questionnaire results, behavioural transitions, and prediction models of learning outcomes in simulation-based learning. While the questionnaire was based on various business case dimensions, lag sequential analysis was applied to expose the dependency of serially sequenced trials in the learning process. More importantly, regression modelling was conducted to predict or analyse individual performance in the simulation.

The results demonstrated that human mobile-web interaction could estimate learning outcomes, as represented by the hotel performances in this study, in simulation-based distance learning. This is clearly seen in the regression models with significant statistical scores, as well as satisfactory values obtained from the adjusted R-squared. In addition, the case studies relied on a large sample of participants to identify interesting trends that may not be apparent in similar human mobile-web interaction studies. Questionnaire scores on a Likert scale complied with the results of previous studies [39], with new insights on the

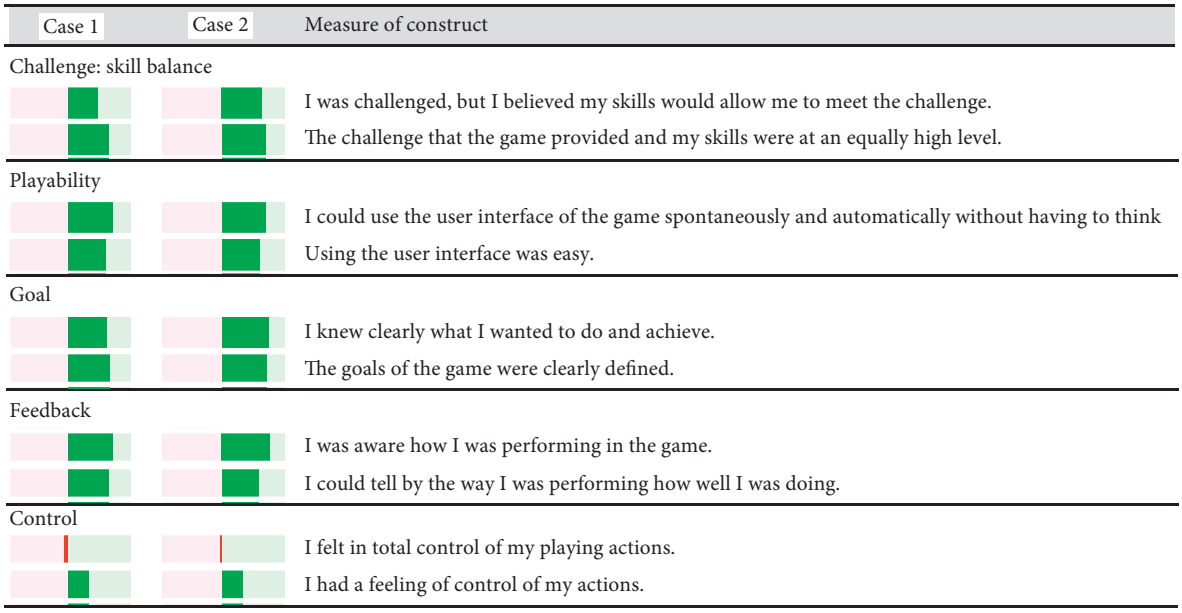

Figure 11: Average ratings of measurement in challenge, playability, goal, feedback, and control. Case 1: distance learning; Case 2: classroom learning.

design of the collaborative learning process. In classroom learning, over 60% of the items have since been rated higher than those in the counterpart case study. This revealed growing confidence in comprehending managerial skills as long as participants were physically present to each other as part of the simulation. To summarise what has been stated so far, the results were a remarkable account of the learning effects; distance learning made it easier to analyse individual performance, whereas classroom learning would more likely bring in trustworthy experiences.

5.2. The Design Pyramid of a Meaningful Learning Process. Currently, there are no mobile gaming studies of business simulations in which participants capitalise on managerial skills, as this study has achieved. Pedagogy-oriented studies mainly focus on the various functionality designs for user acceptability [40], matching technological features with user preferences [39], and learning interventions with stakeholder-involved collaborative frameworks [41]. In addition, interdisciplinary research is interested in studying the complexity of gaming systems from different perspectives of design science [42]. Design frameworks have not been fully pledged; therefore, future studies should evaluate how existing frameworks can be effectively integrated with collaborative skill transfer via online business simulations as a platform for team-based learning.

This study explored the feasibility of using business simulators as the pillar for constructing collaborative learning processes based on a mobile gaming system, as illustrated in Figure 12. This is a pyramid where the closed part is for the training aspect in the request of realistic simulations, and the principal can add monotonous details for adjusting the aspects and supervision. On the top layer, collaborative learning serves as an enabler of how individuals would reflect on their roles, which cannot be represented on computers.

5.3. Analytical Approaches to Gaming Experience and Learning Telemetry. Experience and patterns of learning behaviours through gaming practices are key to understand the impact of play and assessment of core design elements [43]. Although serious games do not pursue pure recreational aims, player experience has been identified as an important channel for bridging the gap between designers and users by observing "what players think." Boletsis and McCallum studied elderly clients' experience with a serious game application with regard to cognitive ability training and screening [44]. Peng et al. screened the motivation and engagement outcomes of media enjoyment underlying the self-determination theory [45]. With the growing trend of further improving player experience, subjective methods for enquiring about player experience revolve around interviews, focus groups, in-game data collection, and questionnaires.

As a side option for surveying entrepreneurial self-efficacy items, an experience questionnaire might be an alternative that incorporates three modules requesting players' feedback on approximately 50 items on a Likert scale [46]. Such instruments are popular and have been extensively tested because of their relatively in-depth design of questions on multiple psychological dimensions. For example, the GEQ was applied to both multiplayer board gaming and computer-mediated digital games, so it represents the only survey applied to all types of games [47]. Another template is the User Experience questionnaire [48]. This provides an excellent method for understanding whether the attributes of a particular product can play a significant role in utility, usefulness, and efficiency [49]. The realisation of a game model in modalities is not an exception in practice—mobile

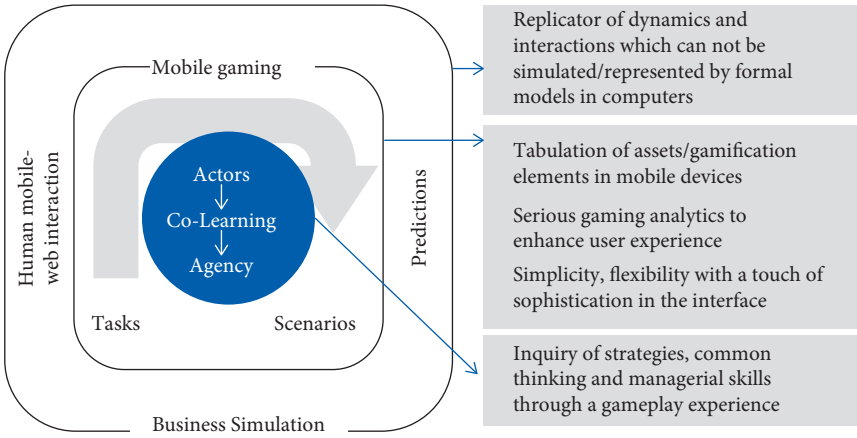

Figure 12: Business simulation-mobile gaming-collaborative learning pyramid for training managerial skills.

games, with their educational merits, are treated as offering online, playful experiences to touch screen devices. Many applications include monopoly and the Beer Distribution Game in tablets and classic computers.

In this study, multiple quantitative methods were used to examine the game experience and learning effect. As pointed out by Liu et al., gamified practices can be counted successfully only if the catalyst and experience goals are met [50]. The catalyst goal refers to active participation, responses, or engagement from players; thus, it is easy to standardise and enquire. In contrast, the present research on experience evaluation is subject to a limited choice of measuring tools; therefore, the rightful combination of traditional analytic tools and visualisation methods [51] might serve as an even better instrument to complement learning performance prediction models and collect information regarding experience.

The limitation is the absence of a mixed-method approach, considering that lag sequential analysis, regression modelling, and scale-based surveying are quantitative measurements. This was because of the limited time availability of the participants. In addition, no statistical analysis was conducted to explore the differences in behavioural patterns potentially engendered by socioeconomic background [52]. Futuristic game sessions might sharpen the time horizon of the play and provide opportunities for interviews, open discussions, and a more extensive background survey.

6. Conclusions

This study shows that business simulations in both distance and classroom learning formats, supported by mobile gaming systems, can uncover the key challenges of hospitality management in collaborative learning processes.

Previous studies have shown the authenticity of simulations as a tool for studying the relationship between teamwork, learning outcomes, and satisfaction of business students with socially constructed meanings [53].

In addition to the several proxy attributes of human mobile-web interaction to significantly predict learning outcomes, the results show that if participants are engaged in hotel management simulation according to a well-established visual communication design, behavioural transitions manifest high levels of frequency, diversity, and exploration from the whole to the parts of the system, among other key features.

However, this collaborative learning process design framework can only attest to the behavioural transitions directed by the gamification elements of the hotel business simulation, rather than how participants would respond in the context of their teamwork experience. Therefore, the results presented in the next step will be applied to fine-tune the mobile version of the game and make the task and scenario design more relevant to the hotel situation. This will then be assessed in the next semester by specialists in hospitality services management and students enrolled in the same master's courses.

Data Availability

Data used to support the findings of this study are available from the author upon request.

Conflicts of Interest

The author declares no conflicts of interest.

Acknowledgments

The author would like to thank Dr. Marcin Wardaszko at Kozminski University, Warsaw, Poland, and members of the Gaming and Participatory Simulation Laboratories, Kungliga Tekniska Högskolan, Stockholm, Sweden, for their technical support and inspirational discussions. This work was supported by KTH-CSC funding (201600160048).

References

[1] I. O. Pappas, P. Mikalef, M. N. Giannakos, and P. E. Kourouthanassis, "Explaining user experience in mobile gaming applications: an fsQCA approach," *Internet Research*, vol. 29, no. 2, pp. 293–314, 2019.

[2] A. K. Yadav and S. S. Oyelere, "Contextualized mobile game-based learning application for computing education,"

Education and Information Technologies, vol. 26, no. 3, pp. 2539–2562, 2021.

[3] J. Huizenga, W. Admiraal, G. t. Dam, and J. Voogt, "Mobile game-based learning in secondary education: students' immersion, game activities, team performance and learning outcomes," *Computers in Human Behavior*, vol. 99, pp. 137–143, 2019.

[4] R. Edmonds and S. Smith, "From playing to designing: enhancing educational experiences with location-based mobile learning games," *Australasian Journal of Educational Technology*, vol. 33, no. 6, pp. 41–53, 2017.

[5] M. K. Othman, S. Aman, N. N. Anuar, and I. Ahmad, "Improving children's cultural heritage experience using game-based learning at a living museum," *Journal on Computing and Cultural Heritage*, vol. 14, no. 3, pp. 1–39, 2021.

[6] H. Srinivas, "Collaborative Learning," 2022, http://www.gdrc.org/kmgmt/c-learn/.

[7] Y.-T. Chuang, "SSCLS: a smartphone-supported collaborative learning system," *Telematics and Informatics*, vol. 32, no. 3, pp. 463–474, Aug. 2015.

[8] S. C. Jackson, L. A. Bilich, and N. Skuza, "The benefits and challenges of collaborative learning: educating dental and dental hygiene students together," *Journal of Dental Education*, vol. 82, no. 12, pp. 1279–1286, 2018.

[9] R. Myron, C. French, P. Sullivan, G. Sathyamoorthy, J. Barlow, and L. Pomeroy, "Professionals learning together with patients: an exploratory study of a collaborative learning Fellowship programme for healthcare improvement," *Journal of Interprofessional Care*, vol. 32, no. 3, pp. 257–265, 2018.

[10] Y.-C. J. Wu, J.-P. Shen, and C.-L. Chang, "Electronic service quality of Facebook social commerce and collaborative learning," *Computers in Human Behavior*, vol. 51, pp. 1395–1402, 2015.

[11] C. P. Subbe, fnm au, J. Kellett et al., "Crisis checklists for in-hospital emergencies: expert consensus, simulation testing and recommendations for a template determined by a multi-institutional and multi-disciplinary learning collaborative," *BMC Health Services Research*, vol. 17, no. 1, p. 334, 2017.

[12] R. Meseguer Pallarès, P. Damián-Reyes, J. Favela Vara, and L. Navarro Moldes, "Context awareness for collaborative learning with uncertainty management," *J. Univers. Comput. Sci. JUCS*, vol. 16, no. 12, pp. 1556–1576, 2010.

[13] Y.-F. Yang, A. P. I. Goh, Y.-C. Hong, and N.-S. Chen, "Primary school students' foreign language anxiety in collaborative and individual digital game-based learning," *Computer Assisted Language Learning*, pp. 1–21, 2021.

[14] E. G. Ko and K. Y. Lim, "Promoting English learning in secondary schools: design-based research to develop a mobile application for collaborative learning," *The Asia-Pacific Education Researcher*, 2021.

[15] H.-Y. Wang, H. B.-L. Duh, N. Li, T.-J. Lin, and C.-C. Tsai, "An investigation of university students' collaborative inquiry learning behaviors in an augmented reality simulation and a traditional simulation," *Journal of Science Education and Technology*, vol. 23, no. 5, pp. 682–691, 2014.

[16] F. Ke and P. Carafano, "Collaborative science learning in an immersive flight simulation," *Computers & Education*, vol. 103, pp. 114–123, 2016.

[17] ABSEL, "Association for Business Simulation and Experiential Learning," 2022, https://absel.org/.

[18] P. Greenlaw, L. Herron, and R. Rawdon, *Business Simulation in Industrial and University Education*, Literary Licensing, LLC, MT 59937, United States, 2012.

[19] K. J. Cohen and E. Rhenman, "The role of management games in education and research," *Management Science*, vol. 7, no. 2, pp. 131–166, 1961.

[20] C. R. Klasson, "Business gaming: a progress report," *Academy of Management Journal*, vol. 7, no. 3, pp. 175–188, 1964.

[21] A. J. Faria, D. Hutchinson, W. J. Wellington, and S. Gold, "Developments in business gaming," *Simulation & Gaming*, vol. 40, no. 4, pp. 464–487, 2009.

[22] T. Rogmans and W. Abaza, "The impact of international business strategy simulation games on student engagement," *Simulation & Gaming*, vol. 50, no. 3, pp. 393–407, 2019.

[23] J. D. Sterman, "Modeling managerial behavior: misperceptions of feedback in a dynamic decision making experiment," *Management Science*, vol. 35, no. 3, pp. 321–339, 1989.

[24] H. L. Lee, V. Padmanabhan, and S. Whang, "The bullwhip effect in supply chains," *Sloan Management Review*, vol. 11, 1997.

[25] F. R. Jacobs, "Playing the beer distribution game over the internet," *Production and Operations Management*, vol. 9, no. 1, pp. 31–39, 2000.

[26] S. J. Franciosi, "Simulation game impacts on perceptions of nuclear energy," in *Intersections in Simulation and Gaming*, pp. 331–341, Springer, Cham, 2018.

[27] P. C. Adams, "Teaching and learning with SimCity 2000," *Journal of Geography*, vol. 97, no. 2, pp. 47–55, 1998.

[28] K. Seifert and R. Sutton, "Motivation Theories on Learning," Found. Learn. Instr. Des. Technol," 2018, https://edtechbooks.org/lidtfoundations/motivation_theories_on_learning.

[29] Hotel Stars, "Development of the Simulation Game–Based Teaching Programme," in *The Shift from Teaching to Learning: Individual, Collective and Organizational Learning through Gaming Simulation*, pp. 624–638, Dornbirn: International Simulation and Gaming Association, Dornbirn, Austria, 2014.

[30] M. Sailer, J. U. Hense, S. K. Mayr, and H. Mandl, "How gamification motivates: an experimental study of the effects of specific game design elements on psychological need satisfaction," *Computers in Human Behavior*, vol. 69, pp. 371–380, 2017.

[31] C. Zhang, J. Baalsrud Hauge, K. P. Härenstam, and S. Meijer, "Game experience and learning effects of a scoring-based mechanic for logistical aspects of pediatric emergency medicine: development and feasibility study," *JMIR Serious Games*, vol. 9, no. 1, Article ID e21988, 2021.

[32] C. Zhang, J. Baalsrud Hauge, K. P. Härenstam, and S. Meijer, "A Serious Logistical Game of Paediatric Emergency Medicine: Proposed Scoring Mechanism and Pilot Test," in *Lecture Notes in Computer Science*, pp. 468–478, Games and Learning Alliance, Cham, 2019.

[33] G. Sackett, "The lag sequential analysis of contingency and cyclicity on behavioral interaction research," in *Handbook of Infant Development*, pp. 623–649, Wiley, NY, USA, 1979.

[34] E. Montague, J. Xu, P.-y. Chen, O. Asan, B. P. Barrett, and B. Chewning, "Modeling eye gaze patterns in clinician-patient interaction with lag sequential analysis," *Human Factors: The Journal of the Human Factors and Ergonomics Society*, vol. 53, no. 5, pp. 502–516, 2011.

[35] A. Tlili, H. Wang, B. Gao et al., "Impact of cultural diversity on students' learning behavioral patterns in open and online courses: a lag sequential analysis approach," *Interactive Learning Environments*, pp. 1–20, 2021.

[36] K.-H. Yang, "Learning behavior and achievement analysis of a digital game-based learning approach integrating mastery learning theory and different feedback models," *Interactive Learning Environments*, vol. 25, no. 2, pp. 235–248, 2017.

[37] M. Allen, *The SAGE Encyclopedia of Communication Research Methods. 2455 Teller Road*, SAGE Publications, Inc, Thousand Oaks California 91320, USA, 2017.

[38] W.-C. Yen and H.-H. Lin, "Investigating the effect of flow experience on learning performance and entrepreneurial self-efficacy in a business simulation systems context," *Interactive Learning Environments*, pp. 1–16, 2020.

[39] M. Tabak, F. de Vette, H. van Dijk, and M. Vollenbroek-Hutten, "A game-based, physical activity coaching application for older adults: design approach and user experience in daily life," *Games for Health Journal*, vol. 9, no. 3, pp. 215–226, 2020.

[40] J. Ko, J. J. Lee, S.-W. Jang et al., "An epiduroscopy simulator based on a serious game for spatial cognitive training (EpiduroSIM): user-centered design approach," *JMIR Serious Games*, vol. 7, no. 3, Article ID e12678, 2019.

[41] M. Ward, E. McAuliffe, É. Ní Shé et al., "Imbuing medical professionalism in relation to safety: a study protocol for a mixed-methods intervention focused on trialling an embedded learning approach that centres on the use of a custom designed board game," *BMJ Open*, vol. 7, no. 7, Article ID e014122, 2017.

[42] J. H. G. Klabbers, "Gaming and simulation: principles of a science of design," *Simulation & Gaming*, vol. 34, no. 4, pp. 569–591, 2003.

[43] I. Mayer, G. Bekebrede, C. Harteveld et al., "The research and evaluation of serious games: toward a comprehensive methodology," *British Journal of Educational Technology*, vol. 45, no. 3, pp. 502–527, 2014.

[44] C. Boletsis and S. McCallum, "Smartkuber: a serious game for cognitive health screening of elderly players," *Games for Health Journal*, vol. 5, no. 4, pp. 241–251, 2016.

[45] W. Peng, J.-H. Lin, K. A. Pfeiffer, and B. Winn, "Need satisfaction supportive game features as motivational determinants: an experimental study of a self-determination theory guided exergame," *Media Psychology*, vol. 15, no. 2, pp. 175–196, 2012.

[46] W. A. IJsselsteijn, Y. A. W. de Kort, and K. Poels, "The game experience questionnaire," 2013, https://research.tue.nl/en/publications/the-game-experience-questionnaire.

[47] J. Barbara, "Measuring user experience in multiplayer board games," *Games and Culture*, vol. 12, no. 7-8, pp. 623–649, 2015.

[48] M. Schrepp, A. Hinderks, and J. Thomaschewski, "Applying the user experience questionnaire (UEQ) in different evaluation scenarios," *Design, User Experience, and Usability. Theories, Methods, and Tools for Designing the User Experience*, Springer, Cham, pp. 383–392, 2014.

[49] J. D. Guldager, S. L. Kjær, P. Lyk et al., "User experiences with a virtual alcohol prevention simulation for Danish adolescents," *International Journal of Environmental Research and Public Health*, vol. 17, no. 19, p. 6945, 2020.

[50] D. Liu, R. Santhanam, R. Santhanam, and J. Webster, "Toward meaningful engagement: a framework for design and research of gamified information systems," *MIS Quarterly*, vol. 41, no. 4, pp. 1011–1034, 2017.

[51] M. Minović, M. Milovanović, U. Šošević, and M. Á. Conde González, "Visualisation of student learning model in serious games," *Computers in Human Behavior*, vol. 47, pp. 98–107, 2015.

[52] Z. Liu, H. N. H. Cheng, S. Liu, and J. Sun, "Discovering the two-step lag behavioral patterns of learners in the college SPOC platform," *International Journal of Information and Communication Technology Education*, vol. 13, no. 1, pp. 1–13, 2017.

[53] G. Lohmann, M. A. Pratt, P. Benckendorff, P. Strickland, P. Reynolds, and P. A. Whitelaw, "Online business simulations: authentic teamwork, learning outcomes, and satisfaction," *Higher Education*, vol. 77, no. 3, pp. 455–472, 2019.