Hindawi
Mobile Information Systems
Volume 2022, Article ID 8353937, 9 pages
https://doi.org/10.1155/2022/8353937

Research Article

Design and Application of Intelligent Financial Accounting Model Based on Knowledge Graph

Xuechen Hou

School of Accounting and Finance, Xi'an Peihua University, Xi'an 710000, Shanxi, China

Correspondence should be addressed to Xuechen Hou; hxc@peihua.edu.cn

Received 30 December 2021; Revised 16 January 2022; Accepted 19 January 2022; Published 10 March 2022

Academic Editor: Hasan Ali Khattak

With the continuous progress of science and technology, economic globalization has become an important direction for the development of enterprises. In the process of enterprise development, artificial intelligence and machine learning techniques have greatly improved the efficiency of enterprise accounting and financial management and have gradually shifted traditional financial accounting to modern financial management and accounting. Owing to the existing problems of inefficiency, large consumption of time and resources, and low degree of intelligence in the existing computerized financial data prediction systems, this study proposes an intelligent financial accounting and a financial risk monitoring and early warning model based on knowledge graph and deep learning techniques. To validate its performance, the model is trained using financial data of 120 listed companies, and the model is applied to establish the prediction of whether the listed companies are facing a financial crisis, using another 60 companies as the test sample. Results show that the use of deep learning and knowledge graph techniques can significantly improve the regulatory model, enhance regulatory penetration, and alleviate regulatory time lag, thus improving the ability of regulation to detect enterprise problems and prevent risks.

1. Introduction

With the rapid development of Internet technology, artificial intelligence has been applied more in all walks of life, which has also greatly improved the production and management efficiency of all walks of life. The ability to apply artificial intelligence (AI) has gradually become one of the core competencies of an enterprise. For enterprise financial accounting, the development of AI has also caused a huge impact on enterprise financial accounting in terms of both accounting methods and efficiency [1]. In the new market competition era of pressure and increased production costs, enterprises not only need to save costs but also need to improve efficiency. The application of AI in the enterprise becomes more and more indispensable. In terms of enterprise financial accounting, the application of intelligent finance has become another idea for enterprise financial workers to promote enterprises [2].

AI is an emerging technical discipline used to develop, simulate, extend, and expand the theories, methods, technologies, and application systems of human intelligence. Currently, with the popularity of computer technology, financial application software can help accounting staff to reduce a lot of workloads and greatly enhance the efficiency of the accounting department [3]. In the near future, our society is about to enter the era of AI, with the massive popularity of AI, the traditional accounting industry will be replaced with AI financial robots, and the transformation to management accounting will be inevitable [4].

The existing company business management system plays an important role in serving front-line supervision, but there are still shortcomings in supporting technology supervision, mainly in three aspects: First, the database needs to be enhanced, the data are not comprehensive and complete, and the data lack effective integration. Second, the lack of new technology support is caused by the limited ability to analyze information [5]. In the face of the huge amount, scattered sources and diverse formats of company data, statistical reports, regulatory inquiries, manual search and processing of information, manual identification and

disposal of traditional methods have gradually become unsuitable, the ability of machine processing and analysis of data needs to be improved [6]. Third is the lack of real-time monitoring and dynamic warning. At present, the intelligence of the company's business management system needs to be improved, and there are deficiencies in real-time data collection, real-time data calculation, dynamic monitoring of risk situations, and timely detection of problems [7]. To empower the intelligent supervision of listed companies, this study determines the key direction of this research based on the selection of supervisory technology, i.e., the research of intelligent supervision of listed companies based on deep learning and knowledge graph techniques. Furthermore, this study introduces the technology related to knowledge mapping and proposes a scheme to build an intelligent antifraud strategy system for accounting case prevention combined with associated risk characteristics. In addition, a financial knowledge map of enterprise financial accounting is developed and various graph analysis techniques are used to mine and refine financial association risk features; the financial association risk features are combined with traditional financial accounting case prevention rules to form a complete intelligent financial accounting strategy system. The effectiveness and accuracy of the proposed method are proved through relevant experiments.

The rest of the article is organized as follows: Section 2 provides an overview of the state-of-the-art AI techniques in enterprise management. The methodology of the proposed study is illustrated in Section 3. Section 4 presents a detailed description of the experimental process. Section 5 is about results and discussion, and finally, Section 6 summarizes the manuscript.

2. Related Work

The reasonable use of AI can effectively promote the process of financial business integration in enterprises, and enterprise managers must pay attention to financial business integration. In the integration mode, business information can be converted into accounting information to the maximum extent so that enterprise finance and business are closely connected and efficiently collaborated [8]. Enterprise managers can then make timely decisions or adjustments based on real-time information. The realization of the integration of business and finance requires several tasks, involving a variety of business departments, requiring the cooperation of the three main departments of finance, business, and information, from the establishment of the project to the operation of a larger process; at the same time, with the development of enterprises and business changes, this project also needs to be adjusted on time; therefore, the enterprise finance business integration management system must be constantly improved and updated [9]. About the current development of enterprise financial artificial intelligence, to promote the development of financial business integration, it is necessary to organically combine enterprise business processes, financial accounting processes, and internal enterprise management processes, to reasonably integrate artificial intelligence into it, to centralize the information of enterprise financial business in a database, to realize information sharing, and to truly give full play to the accounting control function of enterprises [10].

Denglin [11] employed logistic regression (LR) to develop a model for financial risk early warning, achieved the probability for splitting and understanding the causes of financial problems of the bank, and proposed six indicators that can play a vital part in financial early warning. Yingchao [12] applied cash flow data to the financial risk warning. Furong [13] assessed the enhancement of cash flow variables in a logistic model. Ding [14] employed AI techniques to accomplish the enterprise intelligent audit, enhance the effectiveness of enterprise audit, and control and manage the enterprise revenue accurately and timely. An improved dynamic learning neural network algorithm model was developed using the principles of deep learning theory to accomplish an audit on enterprise data. Zhang et al. [15] designed a state frequency memory recurrent deep network for stock price forecasting with multiple frequency trading patterns and succeeded in better trading and prediction performances. The authors in [16] proposed a deep learning financial model that is implemented for price change forecasting via mid-price prediction using high-frequency limit order book data with tensor representation. Deng et al. [17] proposed a fuzzy deep direct reinforcement learning deep network for stock price forecasting and trading signal generation.

Several studies employed convolution neural networks (CNN) based on deep models due to their great achievements in image and video processing problems. However, since the CNNs are based on the assumption that the input data must be represented as a two-dimensional image, the financial data need to be reshaped into images that required preprocessing. Gudelek et al. [18] transformed time series financial price data to two-dimensional images using technical analysis and classified them with deep CNN. Likewise, Sezer and Ozbayoglu [19] proposed a method that converts financial time series data that consisted of technical analysis indicator outputs to two-dimensional images and classified these images using CNN to predict the trading signals. In [20], candlestick chart graphs were transformed into two-dimensional images. Then, an unsupervised convolutional autoencoder (AE) neural network was fed with these images data to propose portfolio construction. Tsantekidis et al. [21] proposed an approach that used the last 100 entries from the limit order book to create a two-dimensional image for forecasting stock price using CNN. The authors in [22] used CNN with correlated features combined to predict the trend of the stocks prices. Although many different machine learning methods exist for enterprise financial and risk management, the corresponding deep learning research is very scarce. In this study, a deep learning model is developed for mapping enterprise financial accounting and various graph analysis techniques are used to mine and refine financial association risk features and combine the financial association risk features.

3. Methods

3.1. Knowledge Graph Technology. With the improvement of technologies such as entity extraction, relation extraction, knowledge reasoning, and entity linking, the research into knowledge graph (KG) has been carried out in full swing in recent years [23]. The emergence of KG has changed the traditional knowledge acquisition mode and transformed the "top-down" approach of knowledge engineering into the "bottom-up" approach of data mining and knowledge extraction. After a long period of theoretical innovation and practical exploration, KGs have been equipped with systematic construction and reasoning methods. However, although KG has a strong modeling ability for entity relationships, it is difficult to express the prevalent multiple relationships. By introducing superedge relations, knowledge hypergraphs can completely express various complex relationship types and have received high attention from academia and industry [24]. In addition, knowledge graphs and knowledge hypergraphs can be combined with AI techniques such as deep learning (DL) to achieve efficient reasoning. The KG is defined as a knowledge base that uses semantic search to collect information from multiple sources to improve the quality of the search. Essentially, a KG is a semantic network graph of various entities, concepts, and their relationships that exist in the real world and are used to formally describe various types of objects and their associated relationships in the real world. Figure 1 shows the six-part of the development process of the KGs.

The KG can be divided into schema/pattern layer and data layer at the logical architecture level, as shown in Table 1.

The schema layer is on top of the data layer and is the core of the KG. The main content is the data structure of knowledge, including the hierarchical structure and the hierarchical relationship knowledge classes such as entity, relation, and attribute, which constrain the specific knowledge forms of the data layer. In complex KGs, more complex knowledge constraint relationships are generally represented by adding additional rules or axioms. The data layer stores specific data information in terms of knowledge, such as fact (fact) triples. For example, the basic types of facts can be represented by triples, such as (entity, relation, entity) and (entity, attribute, attribute value). In fact, entities generally refer to specific objects or things, such as a country or a book. The relations denote some external connection between entities, and attributes and attribute values denote parameter names and parameter values specific to an entity or concept. The triples can be represented as directed graph structures with one-way arrows for asymmetric relations and two-way arrows for symmetric relations. Overall, KGs can be viewed as structured representations of facts, including entities, relations, attributes, and semantic descriptions of facts [25].

3.2. Knowledge Graph Construction. With the help of knowledge mapping technology, second- or even third-degree relationships and anomalous problems behind the enterprise entities can be discovered, thus requiring the study of ontologies. Ontologies define the data patterns in the KG, so the construction of the KG depends heavily on the results of ontology research. Ontology implies the sharing and reuse of knowledge, which in the field of computer science refers to the modeling of domain knowledge. Ontologies characterize the backbone of the formal semantics of a KG. They can be seen as the data schema of the graph. The traditional manual ontology generation method can no longer meet the demand of generating a large number of ontologies because it requires a large amount of human input and is inefficient [26]. To this end, scientists have researched and developed a series of ontology learning systems and methods. Ontology learning can be described as the automatic or semiautomatic generation of ontologies from semistructured or unstructured information on the web, which is a process of extracting semantic information. In this study, an in-depth study of ontology learning has been conducted and a series of results have been achieved in the research of semantic web domain. The ontology learning models can be grouped into different categories from the perspective of learning methods: ontology learning models based on syntactic analysis, statistical analysis, logical analysis, and hybrid strategy analysis. In this study, hierarchical structures are used to construct ontologies, which contain terms, synonyms, concepts, categories, relations, and axioms and rules in order from the bottom to up. The main principle of building a KG in the financial domain is not much different from the construction of graphs in other open domains, which is essentially collecting data from different sources and extracting the set of relations among them, which are the set of binary relations, generally expressed as (entity 1, relation, entity 2) triples, which are usually called metadata. An example of financial knowledge mapping construction is shown in Figure 2.

3.3. General Architecture. There are many theories for building KGs, and generally, there are some common methods. From the basic structure of a graph, the following five steps are needed to build a graph: first, it is essential to organize unstructured data. This is because the data sources exist in different architectural systems and the presentation is difficult to unify. Moreover, the interface also varies with the domain. Second, the structured data have undergone a rigorous data cleansing process, and its quality is already high and redundancy is low so that it can be used directly. Unstructured data can be extracted from the data with entity extraction techniques. Third, after the knowledge extraction is completed, a large amount of metadata with entity-relationship representation is obtained from the basic data, which still needs to be processed in the next step, because these data still lack hierarchy, have the problem of error and redundancy, and are not effectively organized. To get high-quality structured data, data cleaning and merging are also needed. Fourthly, the above steps lead to a huge amount of high-quality data, which leads to the stage of data processing. The data needs to be abstracted and organized with human logic, and the model of knowledge needs to be constructed to make

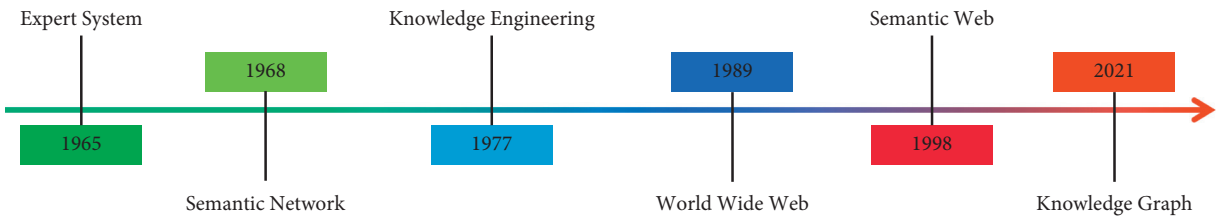

Figure 1: Knowledge graph development timeline.

Table 1: Knowledge graph logic structure.

Logical structure hierarchy	Main content	Examples
Pattern layer	The data model for knowledge classes	Concepts and relationships
Data layer	Specific data information	Fact triples

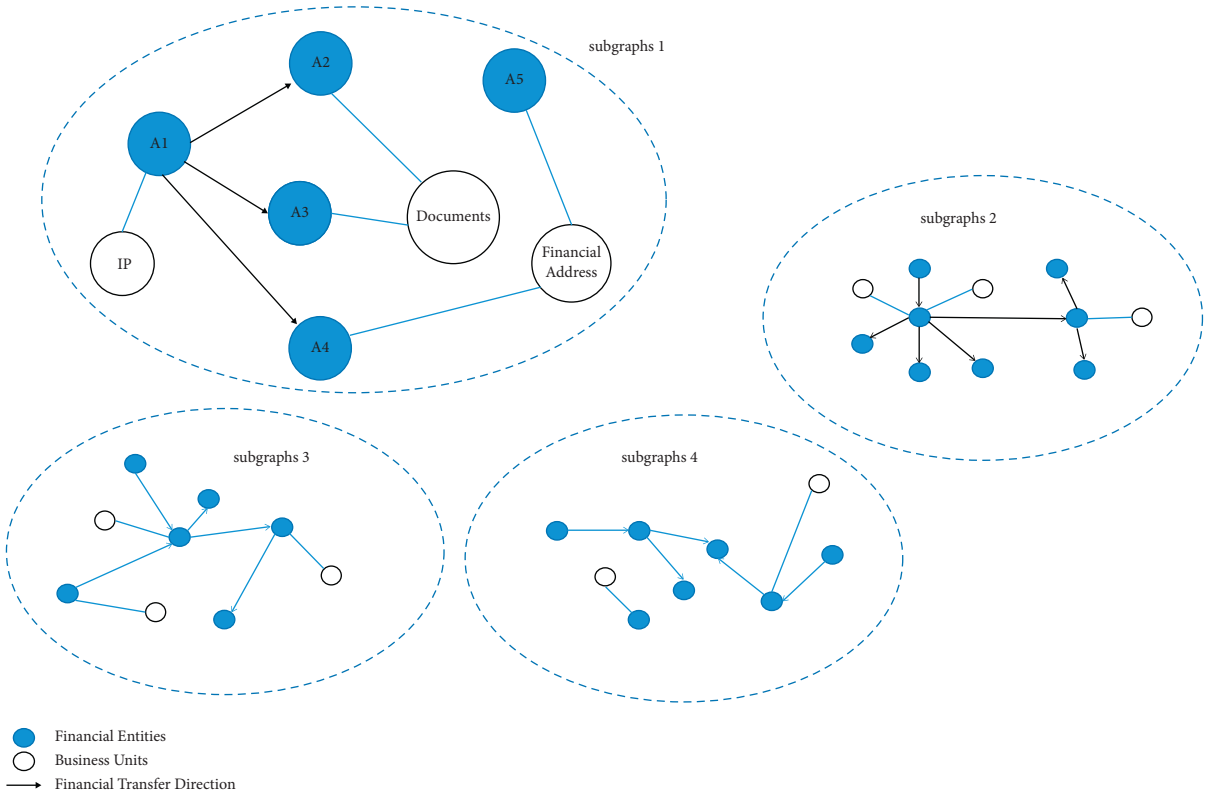

Figure 2: Example of financial knowledge graphs.

the organization of data conform to human cognition. This stage requires a high degree of human involvement. Fifth, the KG is constructed based on the results of data processing, and the construction of the KG needs to be constantly upgraded and iterated. As the knowledge is constantly updated, all the above data acquisition steps and the construction of the knowledge system also need to be constantly updated [27,28]. In summary, for the construction of the relationship graph, in addition to acquiring structured data, what is more important is the design of the knowledge system to support the huge amount of data. This system design contains entities, concepts, hierarchies, and logic, i.e., ontology extraction process and it is a very difficult process to elevate and abstract the existing knowledge. In addition, the reason behind the complexity of the construction of the relationship graph is that it takes the establishment of a repository of all entities and concepts and their associated relationships as the construction purpose, which has no obvious boundary in human perception and industry distinction. For the financial domain that needs to be covered in this study, there is no complex ontology extraction in terms of knowledge description of the domain because the industry possesses very vertical attributes with clear boundaries.

3.4. Knowledge Graph Storage. The KG represents a collection of interconnected descriptions of entities: objects, events, or concepts. KGs put data in context through

connection and semantic metadata and this way provides a framework for data integration, unification, analytics, and sharing. Since the KG is a graph structure, a graph database is needed. Neo4j is an enterprise-strength graph database that combines native graph storage, advanced security, scalable speed-optimized architecture, and ACID compliance to ensure predictability and integrity of relationship-based queries, which is implemented in Java and has high-performance features. The graph database allows better storage of networks consisting of node relationships and attributes. High availability is only available in Enterprise Edition. Neo4j Enterprise Edition High Availability offers two main features: on the one hand, the use of multiple slave database setups can replace the fault tolerance of a single master database, allowing the database to have perfect functionality and read/write operations in case of hardware device problems. On the other hand, Neo4j High Availability is designed for simple operation from one to multiple machine transactions and does not require any changes in existing applications.

3.5. Computational Models. To determine the financial risk status of a company based on its financial situation in a certain market, we employed a deep learning algorithm called Recurrent Neural Network (RNN) in deep learning, which deals with sequential data, and the forward calculation process of long short-term memory (LSTM) network can be expressed as equations (1)–(5). The cell structure of LSTM is shown in Figure 3.

At time step t, the input and output vectors of the hidden layer of the LSTM are x_t and h_t, and the memory unit is c_t. The input gate is used to control how much of the network current input data flows into the memory cell, i.e., how much can be saved to c_t, with the value of

$$i_t = \sigma\left(W_{xi}x_t + W_{hi}h_{t-1} + b_i\right). \tag{1}$$

The forgetting gate is a key component of the LSTM unit that controls which information to keep and which to forget and somehow avoids the gradient disappearance and explosion problems that arise when the gradient is back-propagated over time [28]. The forgetting gate controls the self-linked unit, which can decide which parts of the historical information will be discarded. That is, the information in the memory cell Cm at the previous moment has an impact on the current memory cell c_t.

$$f_t = \sigma\left(W_{xf}x_t + W_{hf}h_{t-1} + b_f\right), \tag{2}$$

$$c_t = f_t \bullet c_{t-1} + i_t \bullet \tanh\left(W_{xc}x_t + W_{hc}h_{t-1} + b_c\right). \tag{3}$$

The output gate controls the effect of the memory cell c on the current output value, i.e., which part of the memory cell will be output at time step t. The value of the output gate is shown in equation (4), and the output of the LSTM unit at time f can be obtained using equation (5), respectively:

$$o_t = \sigma\left(W_{xo}x_t + W_{ho}h_{t-1} + b_o\right), \tag{4}$$

$$h_t = o_t \bullet tanh\left(c_t\right). \tag{5}$$

The basic neural network is comprised of the input layer, hidden layer, and output layer. The output layer is controlled by the activation function, and the layers are connected by weights. The activation function is determined in advance, so what the neural network model "learns" through training is embedded in the "weights." While the basic neural network only establishes weight connections between layers, in the RNNs, weight connections are also established between neurons between layers. Using the proposed RNN, a financial risk AI model based on deep learning was constructed by combining the logic of financial risk judgment [29]. The constructed financial risk model is based on the RNN model, in which the LSTM mechanism is introduced to better correspond to the memory and analysis of the company's finances in time series. The input of the model is the financial status of the company at each time period, and the output of the last layer is used as the input of the neural network layer. Using machine learning, the model gradually converges and the machine can calculate the score for each risk category.

4. Experimentation and Evaluation

4.1. Dataset Composition. To evaluate the performance of the proposed financial accounting management system, 120 listed companies were selected, and the LSTM model was applied to establish the prediction of whether the listed companies are facing a financial crisis. Specifically, 90 companies are selected whose stocks are at risk of termination of listing, and then the overall difference was computed in the number of companies at risk of termination of listing and nontermination of listing. Next, the distribution of sections of listed companies was also taken into account, and the nontermination of 90 listing risk companies in the sample was mainly in the agricultural and real estate sectors. Based on the above considerations, for the selection of the sample, almost all of the terminated listed risk companies were adopted, and the random sampling method was used to select the sample of nonterminated listed risk companies, to obtain consistency in the sample size for both types. Therefore, the sample selection satisfied the objectivity and specificity and provided a solid data foundation for the subsequent scientific analysis.

Among the financial risk judgment models, all financial reports of the company for three years (2015, 2016, and 2017) were entered, and each financial report contained indicators attached to the financial warning indicator system. In each financial report, a financial indicator vector X was constructed based on semantic recognition technology. Based on financial indicator values X of all listed companies in Shanghai and Shenzhen cities of China in 2015, 2016, and 2017, artificial experts first need to label the financial risk status of each company, which was recorded as Y value. Each company has to make an entry of the label based on at least the most recent financial report. The ideal situation is that all financial reports can generate a label so that the model can have more training data. Based on each company's currently typed labels, the financial risk AI model was trained to achieve model convergence, i.e., consistent machine learning

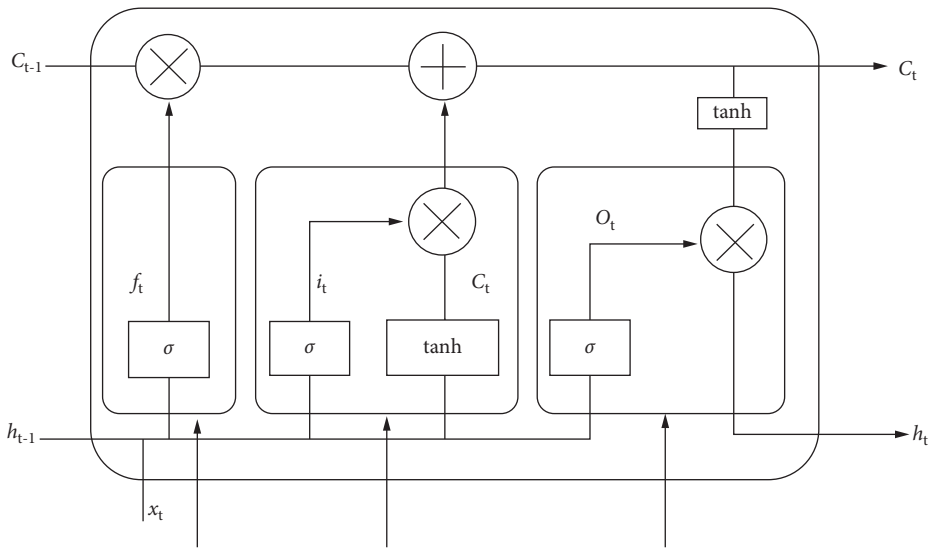

Figure 3: LSTM cell structure diagram.

results, through training and tuning. Based on the trained model, the company's financial indicators were input and the output financial risk judgment was reviewed. In the case of an error, the cause was checked and the model parameters or structure was adjusted until the input financial risk judgment was consistent with the judgment of human experts.

4.2. Experimental Setup. The main parameter settings of the proposed model hybrid network are shown in Table 2. The experimental environment of this study is as follows: the hardware environment used is the Linux system, NVIDIA GTX 1080Ti; the software environment was Python 3.6, sklearn0.19.1. The learning rate was set to 0.002, the activation function was rectified linear unit (Relu), the number of Epochs was 100, and the neural network optimization function applied was stochastic gradient descent (SGD).

4.3. Evaluation Metrics. Combining the existing research results, we finally selected 15 alternative predictors in six areas, including short-term and long-term solvency, profitability, main business distinctness, and company growth capacity. The evaluation metrics are shown in Table 3. The t-hypothesis testing approach is used to test the differences in financial ratios between terminated risk companies and nonterminated risk companies. The *t*-test is a type of inferential statistic used to determine if there is a significant difference between the means of two groups. After statistical analysis, the mean value of the quick ratio was also lower for terminated risk companies than that for nonterminated risk companies, although the confidence level of both the current ratio and cash ratio was greater than 5%. Second, the equity ratios of discontinued risk companies were lower than those of nondiscontinued risk companies on a 5% significance scale.

This suggests that nondiscontinued risk companies have a lighter debt burden than nondiscontinued risk companies and that when the interest rate on debt was greater than the total return on assets, the rate of financial deterioration was accelerated by a ratio that is too high, resulting in a greater likelihood of discontinued risk companies. Third, the profitability of nontermination risk companies was significantly higher than that of termination risk companies, and nontermination risk companies were higher than termination risk companies in the two financial ratio indicators of return on total assets and return on net assets, which were more comprehensive. Fourth, although there was no significant difference in inventory turnover and accounts receivable turnover, the accounts receivable turnover of nonterminally listed risk companies was significantly higher than that of terminated risk companies, and the difference in total asset turnover was particularly significant, indicating that nonterminally listed risk companies were more capable in credit policy and other asset management.

Table 2: Model parameter setting.

Parameter	Parameter setting
Pooling method	Max-pooling
Pooling window size and step size	$(2 * 2, 1)$
Activation function	Relu
Weights	Random normal distribution
Number of LSTM nodes	500
Optimization function	SGD
Learning rate	0.002
Batch-size	32
Epoch	100

5. Results and Discussion

The sample data were brought into the LSTM neural network according to the sample descriptive statistics and the *t*-test and Wilcoxon rank test was used to return the determination of the sample of 120 listed companies, and the results are shown in Table 4. The Wilcoxon test is a nonparametric statistical test that compares two paired groups. The tests calculate the difference between sets of pairs and

Table 3: Evaluation metrics.

Financial characteristics	Financial ratio metrics	Financial characteristics	Financial ratio metrics
Short-term solvency	Current ratio Quick ratio Cash ratio	Asset management capability	Inventory turnover ratio Accounts receivable turnover ratio Total assets turnover ratio
Long-term solvency	Equity ratio Interest cover multiple	Distinctness of main business	Main business distinctness ratio
Profitability	Earnings cash ratio Return on total assets Return on net assets	Company growth capacity	Capital preservation and appreciation Net profit growth rate Accumulated profitability

Table 4: Predicted results.

Group	Modeling samples		Test sample	
	Actual number	Number of correct decisions	Actual number	Number of correct decisions
ST	60	51	30	25
Non-ST	60	58	30	29
Number of correct decisions as a percentage	90.8%		90%	

analyze these differences to find if they are statistically significantly different from one another. The Wilcoxon rank-sum test is applied to test the null hypothesis that two populations have the same continuous distribution. A null hypothesis is a statistical test that states that there is no significant difference between two variables or populations. The base assumptions necessary to employ the rank-sum test are that the data are from the same population, are paired, and can be measured on at least an interval scale.

Moreover, the data were chosen randomly and independently [30]. The LSTM neural network achieved the highest accuracies of 90.8% and 90% for modeling samples and test samples, respectively. The results show that the deep neural network method based on LSTM is a very reliable method for predicting whether a company will enter into financial distress or not. Results show that companies that are more focused on their business tend to stay away from financial distress.

Overall, the research on intelligent supervision of listed companies based on LSTM and knowledge graph is mainly to explore the realistic feasibility of the application of relevant technologies of AI in supervision and to conduct preliminary technical exploration. Through the application of financial technology, the centralized display, dynamic adjustment, and systematic warning of basic company information and regulatory records are realized, enabling the regulator to understand the company more rapidly and comprehensively and discover potential risks in a more timely and effective manner. Under the technology empowerment, it is achieved to strengthen the ability and efficiency of supervisors to discover and identify risks on top of improving the depth and breadth of supervisors' understanding of company information, which ultimately makes front-line supervision timelier and more practical. First, to enhance the depth and breadth of the regulator's grasp of the company's situation, using machine learning and other technical means, we can conduct a multidimensional and full-history portrait of listed companies, comprehensively displaying information such as company history, shareholder profile, key personnel, relationship mapping, financial operation, industry comparison, important transactions, public opinion share price, integrity file, and regulatory evaluation. On this basis, with the orientation of discovering potential risks, the company will combine key information such as shareholders' behavior, compliance operation, and operation status to score the listed companies' real-time dynamic risk evaluation. Second, it enhances the ability of regulators to detect problems and identify risks. Using cloud computing, AI, machine learning, and other technical means enhances the intelligence level of listed companies' supervision and realizes the auxiliary identification of violations and early warning of abnormal risk points detection. For example, for simple violation facts, such as violation of performance forecast and trading of stocks by directors and supervisors during the window period, the system will perform real-time calculation, identify, and remind and improve supervision efficiency and response speed by adding intelligent gate-keeping of machines. Third, it enhances the real-time and effectiveness of front-line supervision of listed companies. Generally, once the larger the risk event that occurs, the longer the time window required for regulatory identification, judgment, and disposal, the more serious the impact on the market. Because of this, there is a need to monitor the information disclosure and microbehavior of listed companies in real-time and in the full picture through the development and application of regulatory technology and the adoption of complementary human-machine and cross-market monitoring information sharing mode, to continuously improve the ability of regulatory identification and disposal of risks, enhance the effectiveness of regulation, and maintain the stable operation of the market.

6. Conclusion

Artificial intelligence in finance has been a very popular topic for enterprises in the last few decades. Based on deep learning, the data transformation model of intelligent

enterprise management is constructed to complete the intelligent transformation analysis of audit data, improve the efficiency of enterprise audit, and finally supervise and manage the enterprise revenue and expenditure timely and accurately. The sample enterprise data were brought into the LSTM neural network according to the sample descriptive statistics and *t*-test and Wilcoxon's rank test was employed to return the determination of the sample of 120 listed companies, and the model is applied to establish the prediction of whether the listed companies are facing a financial crisis, using another 60 companies as the test sample. The deep learning and KG techniques significantly improved the regulatory model, enhanced regulatory penetration, and alleviated regulatory time lag, thus improving the ability of regulation to detect enterprise difficulties and prevent financial risks. The evaluation method based on LSTM and KG has strong operability and practicability and can effectively meet requirements for enterprises to perform management performance evaluations.

Data Availability

The datasets used during the current study are available from the corresponding author on reasonable request.

Conflicts of Interest

The author declares no conflicts of interest.

References

[1] Y. Zhong, C. He, and J. Tang, "Research on intelligent financial framework of colleges and universities in information age," *3D Imaging Technologies-Multidimensional Signal Processing and Deep Learning*, Springer, Singapore, pp. 199–207, 2021.

[2] W. Zhang, R.-S. Chen, Y.-C. Chen, S.-Y. Lu, N. Xiong, and C.-M. Chen, "An effective digital system for intelligent financial environments," *IEEE Access*, vol. 7, pp. 155965–155976, 2019.

[3] N. R. Mosteanu, A. Faccia, and G. Torrebruno, "The newest intelligent financial decisions tool: fractals Asmart approach to assess the risk," *Business and Management Review*, vol. 10, no. 2, pp. 89–97, 2019.

[4] J. Pei, K. Zhong, J. Li, X. Jiyuan, and W. Xinyi, "ECNN: evaluating a cluster-neural network model for city innovation capability," *Neural Computing & Applications*, pp. 1–13, 2021.

[5] X. Zhu, X. Ao, Z. Qin et al., "Intelligent financial fraud detection practices in post-pandemic era," *Innovation*, vol. 2, no. 4, Article ID 100176, 2021.

[6] Y. Hu, "Enterprise intelligent accounting system structure and intelligent accounting algorithm," in *Proceedings of the International Conference on Big Data Analytics for Cyber-Physical-Systems*, pp. 1293–1298, Springer, Shanghai, China, December 2021.

[7] O. Yildirim, U. B. Baloglu, R.-S. Tan, E. J. Ciaccio, and U. R. Acharya, "A new approach for arrhythmia classification using deep coded features and LSTM networks," *Computer Methods and Programs in Biomedicine*, vol. 176, pp. 121–133, 2019.

[8] S. Liu and S. He, "Application of block chaining technology in finance and accounting Field," in *Proceedings of the 2019 International Conference on Intelligent Transportation, Big Data & Smart City (ICITBS)*, pp. 342–344, IEEE, Changsha, China, January 2019.

[9] H. Jiang, "Research on the development of an intelligent financial management system based on data mining technology," *Journal of Physics: Conference Series*, vol. 1578, no. 1, Article ID 012062, 2020.

[10] D. Wang, "Massive data mining for intelligent accounting informationization on hospital financial management system," in *Proceedings of the 3rd International Conference on Inventive Research in Computing Applications (CIRCA)*, pp. 1546–1549, IEEE, Coimbatore, India, September 2021.

[11] L. Denglin, "Construction of enterprise financial risk early warning system," *Research of Modern State-owned Enterprises*, vol. 18, pp. 89-90, 2016.

[12] D. Yangchow, "Research on enterprise financial risk early warning system," *Enterprise Reform andManagement*, vol. 9, pp. 123-124, 2015.

[13] L. Furong, "Financial risk early warning and internal control and countermeasures of apparel Companies," *Finance and Accounting Study*, vol. 222, no. 13, pp. 77-78, 2019.

[14] R. Ding, "Enterprise intelligent audit model by using deep learning approach," *Computational Economics*, 2021.

[15] L. Zhang, C. Aggarwal, and G. Qi, "Stock price prediction via discovering multifrequency trading Patterns," in *Proceedings of the 23rd ACM SIGKDD International Conference on Knowledge Discovery and Data Mining - KDD17*, August 2017.

[16] D. T. Tran, M. Magris, J. Kanniainen, M. Gabbouj, and A. Iosifidis, "Tensor representation in high- frequency financial data for price change prediction," in *Proceedings of the 2017 IEEE Symposium Series on Computational Intelligence (SSCI)*, IEEE, Honolulu, Hawaii, November 2017.

[17] Y. Deng, F. Bao, Y. Kong, Z. Ren, and Q. Dai, "Deep direct reinforcement learning for financial signal representation and trading," *IEEE Transactions on Neural Networks and Learning Systems*, vol. 28, no. 3, pp. 653–664, 2017.

[18] M. U. Gudelek, S. Arda Boluk, and A. Murat Ozbayoglu, "A deep learning-based stock trading model with 2-d cnn trend detection," in *Proceedings of the 2017 IEEE Symposium Series on Computational Intelligence (SSCI)*, IEEE, Honolulu, Hawaii, November 2017.

[19] O. B. Sezer and A. M. Ozbayoglu, "Algorithmic financial trading with deep convolutional neural networks: time series to image conversion approach," *Applied Soft Computing*, vol. 70, pp. 525–538, 2018.

[20] G. Hu, Y. Hu, K. Yang et al., "Deep stock representation learning: from candlestick charts to investment decisions," in *Proceedings of the 2018 IEEE International Conference on Acoustics, Speech and Signal Processing (ICASSP)*, IEEE, Calgary, AB, Canada, April 2018.

[21] A. Tsantekidis, N. Passalis, A. Tefas, J. Kanniainen, M. Gabbouj, and A. Iosifidis, "Forecasting stock prices from the limit order book using convolutional neural networks," in *Proceedings of the 2017 IEEE 19th Conference on Business Informatics (CBI)*, IEEE, Thessaloniki, Greece, July 2017.

[22] H. Gunduz, Y. Yaslan, and Z. Cataltepe, "Intraday prediction of borsa Istanbul using convolutional neural networks and feature correlations," *Knowledge-Based Systems*, vol. 137, pp. 138–148, 2017.

[23] L. Zhu, M. Li, and N. Metawa, "Financial risk evaluation Z-score model for intelligent IoT-based enterprises," *Information Processing & Management*, vol. 58, no. 6, Article ID 102692, 2021.

[24] M. Junhong and W. Zehua, "Research on the intelligentization of accounting in the information technology environment," in *Proceedings of the International Conference on Public Management and Intelligent Society (PMIS)*, pp. 412–415, IEEE, Shanghai, China, February 2021.

[25] H. Park, M. K. Sim, and D. G. Choi, "An intelligent financial portfolio trading strategy using deep Q-learning," *Expert Systems with Applications*, vol. 158, Article ID 113573, 2020.

[26] X. Wang, X. He, and Y. Cao, "Knowledge graph attention network for recommendation," in *Proceedings of the 25th ACM SIGKDD International Conference on Knowledge Discovery & Data Mining*, pp. 950–958, Anchorage, AK, USA, August 2019.

[27] Q. Wang, Z. Mao, B. Wang, and L. Guo, "Knowledge graph embedding: a survey of approaches and applications," *IEEE Transactions on Knowledge and Data Engineering*, vol. 29, no. 12, pp. 2724–2743, 2017.

[28] W. Liu, P. Zhou, and Z. Zhao, "Enabling language representation with knowledge Graph," in *Proceedings of the AAAI Conference on Artificial Intelligence*, vol. 34, no. 3, pp. 2901–2908, New York, NY, USA, February 2020.

[29] T. Dettmers, P. Minervini, and P. Stenetorp, "Convolutional 2d knowledge graph Embeddings," in *Proceedings of the 13th-second AAAI conference on artificial intelligence*, New Orleans, Louisiana, February 2018.

[30] Q. Guo, F. Zhuang, and C. Qin, "A survey on knowledge graph-based recommender systems," *IEEE Transactions on Knowledge and Data Engineering*, 2020.