Hindawi
Mobile Information Systems
Volume 2023, Article ID 9847167, 1 page
https://doi.org/10.1155/2023/9847167

Retraction

Retracted: The Selecting Optimal Ball-Receiving Body Parts Using Pose Sequence Analysis and Sports Biomechanics

Mobile Information Systems

Received 1 August 2023; Accepted 1 August 2023; Published 2 August 2023

This article has been retracted by Hindawi following an investigation undertaken by the publisher [1]. This investigation has uncovered evidence of one or more of the following indicators of systematic manipulation of the publication process:

(1) Discrepancies in scope
(2) Discrepancies in the description of the research reported
(3) Discrepancies between the availability of data and the research described
(4) Inappropriate citations
(5) Incoherent, meaningless and/or irrelevant content included in the article
(6) Peer-review manipulation

The presence of these indicators undermines our confidence in the integrity of the article's content and we cannot, therefore, vouch for its reliability. Please note that this notice is intended solely to alert readers that the content of this article is unreliable. We have not investigated whether authors were aware of or involved in the systematic manipulation of the publication process.

Wiley and Hindawi regrets that the usual quality checks did not identify these issues before publication and have since put additional measures in place to safeguard research integrity.

We wish to credit our own Research Integrity and Research Publishing teams and anonymous and named external researchers and research integrity experts for contributing to this investigation.

The corresponding author, as the representative of all authors, has been given the opportunity to register their agreement or disagreement to this retraction. We have kept a record of any response received.

References

[1] H. Du, "The Selecting Optimal Ball-Receiving Body Parts Using Pose Sequence Analysis and Sports Biomechanics," *Mobile Information Systems*, vol. 2022, Article ID 8684951, 10 pages, 2022.

Hindawi
Mobile Information Systems
Volume 2022, Article ID 8684951, 10 pages
https://doi.org/10.1155/2022/8684951

Research Article

The Selecting Optimal Ball-Receiving Body Parts Using Pose Sequence Analysis and Sports Biomechanics

Hui Du

School of Physical Education, Wuhan University of Science and Technology, Wuhan 430081, China

Correspondence should be addressed to Hui Du; duhui@wust.edu.cn

Received 2 September 2022; Revised 12 September 2022; Accepted 16 September 2022; Published 29 September 2022

Academic Editor: Chia-Huei Wu

The purpose is to explore a personalized and targeted training mode in football player training. Firstly, this work introduces the principle and advantages of machine vision sensing. Secondly, from the biomechanical point of view, the influence of the acceleration of several joints and the joint angle on the ball receiving effect is analyzed. Furthermore, the football player's in-game receiving image is collected using machine vision technology, and the pose image data are preprocessed to construct a data set. Then, a new model is constructed and trained using Haar-like feature (HLF) and (Adaptive Boosting (Adaboost). Finally, the recognition model of the football receiving pose is tested, and the recognition effect is compared with the mainstream recognition model. The results show that the recognition parameter of the traditional method based on the Halcon recognition pose system is 5.12 at 20 times and then begins to decline. In contrast, the identification parameters based on the Industrial Robot Vision System Development (IRVSD) platform are much higher than those based on Halcon. It slightly decreases when the training times are 60 and then gradually increases. However, the recognition parameters based on the proposed machine vision have been far higher than those of the two traditional methods and maintained at about 10. This is because the proposed method extracts the foul image features, establishes the pose sequence potential function, and analyzes it in more detail, thus improving the recognition accuracy. The player's pose recognition model based on HLF and AdaBoost algorithm can identify and evaluate the ball-receiving pose, thus guiding the receiving improvement. The finding shows that the proposed recognition technology can recognize and evaluate the players' ball-receiving image, providing a new direction for applying artificial intelligence technology in sports.

1. Introduction

1.1. Research Background. With the continuous science and technological revolution, Artificial Intelligence (AI) technology has gained popularity in everyday lives. It promotes the further application of the Internet and information technology in social production. Thus, the dawn of the information age is sure to renovate the traditional training methods in sports. This work looks into the mass sport: football by analyzing players' two fundamental skills: passing and receiving, which are very important for adjusting tactics and coordinating attacks [1, 2].

1.2. Related Work. The basic skills of football mainly include juggling, kicking, receiving, dribbling, heading, interception, faking, and throwing the out-of-bound ball. In football skills, receiving is also called trapping. In the game, players except the goalkeeper can only catch the ball with any body parts except the upper limbs. Players mainly use their feet to receive the ball, especially the instep and foot arches, and ball-receiving skill is crucial for the team's attack and tactical change [3]. Davey et al. used high-speed cameras to manually collect the physical anatomical landmarks of five experienced high school football players (including left and right shoulder joints, medullary joints, knee joints, stepping joints, heels, and toes). The experiment found that the ball speed was much lower than when kicked by the foot arches or the instep. There was also a significant difference in the rotation speed and torque of the ball kicked by the outer medullary joint and the outer instep [4]. Caetano et al. studied football players' injury risks from heading through multiple heading tests on four adult men, former high school athletes. The respondents wore three-dimensional (3D)

kinematic equipment. The peak head linear acceleration and angular acceleration were counted at two ball speeds. The results showed that the peak head linear acceleration was not enough to cause head injury [5]. Li et al. compared the peak force curves on athletes wearing three different types of headgear. The research found the type of headgear that could best protect the athlete against heading [6]. Casey et al. analyzed the technical pose of volleying from the front of the instep under sports biomechanics. They clarified the mechanical factors of each pose linked to football volleying. They considered that striking the ball in midair was the core technical pose of volleying. The quality of approach, support, and swing directly affected the striking time, point, and speed. In an ideal situation, players should strike the back middle of the ball with the front of the instep because the shambling bone was a prominent part of the instep. It had a small contact area and concentrated force when colliding with the round ball. As long as the joint was firmly fixed at the moment of striking, it could coordinate the lower leg and foot to transfer the maximum possible momentum. As such, players could strike the ball quickly and powerfully to increase the ball's initial speed [7]. Sun et al. employed a 3D video system to capture the pose of the players' baseline forehand, striking the topspin in the simulated game state. Based on the visual image analysis system of the Teaching and Research Department of Beijing University of Physical Education, the biomechanical analysis was carried out. The research considered the kinematic parameters of the forehand striking the topspin. The results revealed that the forehand backswing of Chinese elite tennis players did not result in linear acceleration. There was an obvious deceleration adjustment process before the end of the racket, which aimed to adjust the striking pose and make it more in line with muscle contraction [8]. These relevant theories and methods enrich the theoretical research on football players' suitable receiving parts. They provide some data support for this work.

1.3. Research Significance. Computer technologies are seeing a constant upgrade in today's society, giving birth to intelligent image recognition (IR). In particular, intelligent IR can lend to this work's research on receiving pose evaluation of football players. Here, athletes' receiving pose images are collected by the camera from game videos. The ball-receiving effects of different body parts are analyzed from the biomechanics perspective. The receiving pose images are preprocessed before constructing the training dataset. The Haar-Like feature (HLF) and AdaBoost algorithm are selected to build and train the football players' pose feature extraction (FE) model. The proposed players' pose FE model is tested and compared with the mainstream recognition models. The research results provide references for players to receive the ball using suitable body parts. Based on machine vision (MV), this work processes the collected images and trains the proposed players' pose FE model to achieve a real-time, efficient, accurate, and intelligent IR effect. Ultimately, it aims to evaluate the ball-receiving effect of players using different body parts. The workflow of this work is shown in Figure 1.

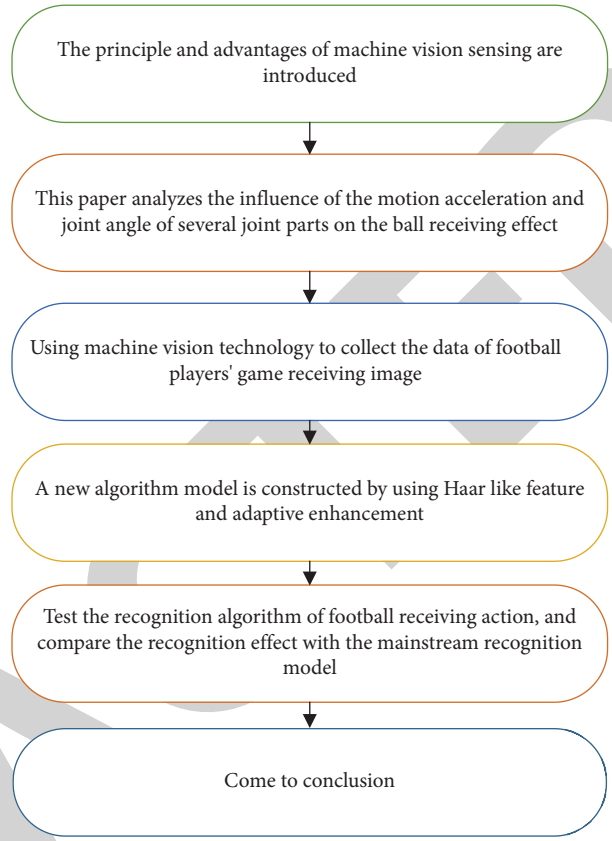

Figure 1: Workflow of this work.

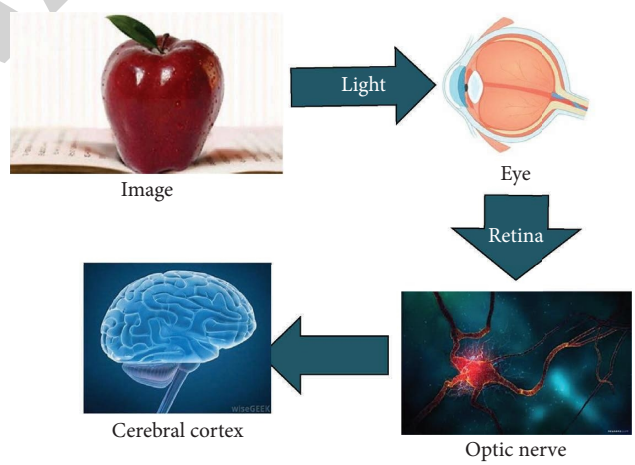

Figure 2: Humans' information perception through the vision system.

2. Calculation Model of Player's Ball Receiving Effect Based on Image Sequence Analysis (ISA) of Human Motion

2.1. Machine Vision (MV) Sensing. Vision originates from obtaining external environmental information in the biological world. It is the most effective means for natural organisms to obtain information and one of the core components of biological intelligence. 80% of human information is obtained by vision. Figure 2 unfolds the visual

Table 1: Specific selection requirements of each part of the MVS.

Name	Selection requirements
Lighting system	Type of light source: Incandescent lamp, fluorescent lamp, mercury lamp, and sodium lamp. Classification of irradiation methods: Backlighting, forward lighting, structured light lighting, and strobe light lighting
Lens	Field of view = target resolution ∗ subpixel ∗ camera size/part measurement tolerance ratio; lens selection conditions: Focal length, target height, projected image height, magnification, distance from the projected image to target, graphic center point/node, image distortion
High-speed camera	Select according to different needs
Image capture card	Black and white, colorful, analog, digital, and other types
Vision processor	High configuration programmable logic controller

way for humans to obtain information [9]. Researchers have begun to install "eyes" for machines based on this inspiration. Then, machines can obtain external information through "seeing" like humans, thus giving birth to a new discipline-computer vision. People study the biological vision system and reconstruct a Machine Vision System (MVS) through machine learning (mimicking) [10].

MV is a comprehensive technology, including image processing, mechanical engineering technology, control, electric light source lighting, optical imaging, sensors, analog and digital video technology, and computer software and hardware technology (image enhancement and analysis algorithm and image card). The vision sensor is the direct source of information for the whole MVS. An MVS is mainly composed of one or two graphics sensors and is sometimes equipped with light projectors and other auxiliary equipment. The vision sensor can obtain original images for MVS processing. Visual sensors analyze the captured images through comparison with the reference image in memory [11, 12].

Vision sensors have thousands of light-sensitive pixels. The clarity and fineness of an image are usually measured by resolution and expressed in the number of pixels. Vision sensing technology (VST) can be three-dimensional. 3D vision sensors have a wide range of applications, such as multimedia mobile phones, network cameras, digital cameras, robot vision navigation, automobile safety system, biomedical pixel analysis, man-machine interface, virtual reality (VR), monitoring, industrial detection, wireless remote sensing, microscope technology, astronomical observation, autonomous marine navigation, and scientific instruments. These applications are all based on 3D VST. In particular, 3D VST is particularly important in industrial control and automobile autonomous navigation [13, 14]. A complete MVS contains a lighting system, lens, high-speed camera, image capture card, and vision processor. Table 1 lists the specific selection requirements of each part.

Intelligent VST empowers the intelligent vision sensor or smart camera. A smart camera is a small MVS with image acquisition, image processing, and information transmission functions. Besides, it is an embedded computer vision system. It integrates image sensors, digital processors, communication modules, and peripherals into a single camera. The integrated design can reduce the system complexity and foothold and improve reliability, widening the application field of MVS. Meanwhile, intelligent vision sensors are easy to learn, use, maintain, and install. Thus, it is easy to build a reliable and effective vision detection system in a short time, popularizing intelligent VST in turn [15]. Figure 3 depicts the principle of the mainstream vision sensor.

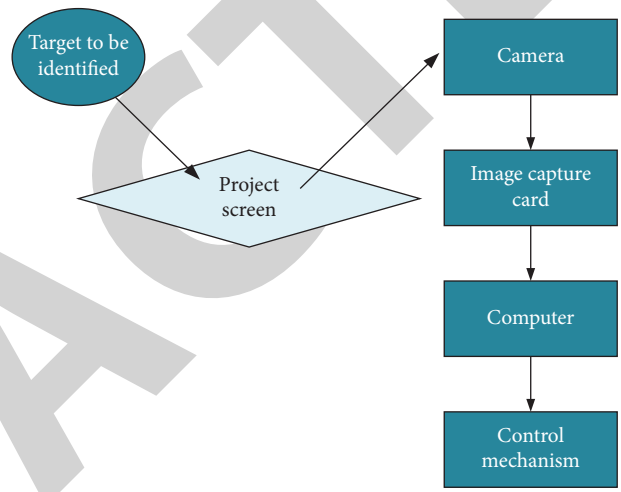

Figure 3: Principle of the mainstream vision sensor.

The most basic feature of the MVS is to improve the flexibility and automation of production. MVS often sees applications in working environments where complicated manual operations are undesirable. Besides, MVS can significantly improve efficiency and automation in mass repetitive industrial production.

2.2. Receiving Pose

2.2.1. Effects of Different Receiving Parts. According to the touch part, ball-receiving body parts can be divided into feet, legs, chest, abdomen, and head [16–18]. Table 2 illustrates the receiving pose of each ball-receiving body part.

2.2.2. Sports Biomechanics. Sports biomechanics explores the influence of various forces on human movement, including gravity and air resistance. Besides, it also explores the human dynamic forces during body movement. Sports biomechanics applications are grounded on basic laws of

Table 2: The receiving pose of ball-receiving body parts.

Ball-receiving body parts		Receiving pose
Foot	Inside of instep	When the player receives the ground ball, the body faces the incoming ball to judge its speed and direction and select the supporting foot's position. Then, the player slightly bends the knee and lifts the foot according to the state of the incoming ball. Knees and ankles are rotated outward, and toes are slightly tilted to aim at the ball with the foot's inner side
		When the ball flies in, the player bends his ball-receiving leg around the knee, lifts it, and pulls, cuts, or blocks the ball as needed. Then, he controls the ball softly on the ground
		Against a rebound ball, the player lowers his ball-receiving leg and forms an included angle with the ground between his shank. The player presses the ball downward, mainly through his shank led by the knee
	Front of instep	The player faces the incoming ball and judges the route and speed. The player stays mainly on his supporting foot, bends his receiving leg, lifts it, and faces the ball with the instep. Then, he withdraws and lowers his ball-receiving foot upon touching the ball. He will relax his knee and ankle accordingly to the cushioning effect
	Sole	The player uses his ball-receiving leg to control the ball under his feet when the ball approaches or lands on the ground. The player uses his sole to control the ball by touching the rear middle part
	Lateral instep	When the ball rolls in, the player stands on his supporting foot, bends and lifts the ball-receiving leg, turns the knee and ankle inward, and aims at the ball with the lateral instep. When the ball approaches, the receiving foot pushes the ball with the lateral instep to control the ball in the required position
		In receiving the rebound ball, accurately judging the ball's landing point is critical. Again, the player has his shank on the ball-receiving end from an included angle with the ground. The player presses the ball with the shank led by the knee to prevent the ball from rebounding
Chest	Chest retraction	When receiving the ball from either side, the player adjusts his position according to the incoming direction and receives and changes the ball direction by retracing his chest
	Chest up receiving	The player receives and has the ball bounced softly up and down on his chest
Leg		The player mainly puts his body weight on the supporting leg and has the body face directly in the incoming direction. Then, he bends his ball-receiving leg and lifts it properly to buffer off the ball strength. Alternatively, he can also use his thigh as a pad buffer to receive the ball elegantly
Head		The player makes a preliminary judgment of the ball trajectory and receives the ball with his forehead by touching the middle and lower part. He will have his jaw slightly raised, his arms naturally opened, and his knees lifted and stretched when receiving. Then, the player stands on his feet and keeps his knees bent and waist and neck slightly shrunk to have the ball controlled on the ground

Table 3: Three kinds of ML.

Serial number	Name		A brief introduction
1	Supervised learning (with data labels)	Classification	Machines are trained to divide a group into specific classes
		Regression	The machine uses previous (labeled) data to predict future events
2	Unsupervised learning (no data labels)	Clustering	It is used to cluster data according to attributes and behavior objects and then apply the clustered data to targeted construction schemes
		Dimensionality reduction	It reduces the variables of the dataset by finding common ground. Most big data visualization uses dimensionality reduction to identify trends and rules
3	Reinforced learning		It uses the personal history and experience of the machine to make decisions. Unlike supervised and unsupervised learning, reinforced learning does not involve providing "correct" answers or outputs. Instead, it focuses only on performance

force and motion, mostly used in sports training and acrobatics. For example, with a little biomechanics knowledge, coaches and athletes might find sports training easier and more scientific, like minimizing the impact of gravity on athletes' movement and using it in other sports events [19, 20].

2.3. Human Pose Sequence Image Analysis

2.3.1. Machine Learning (ML). ML employs algorithms to analyze data, learn the hidden rules, and then make decisions or predictions. In other words, ML teaches computers to learn and develop an algorithm rather than relying on

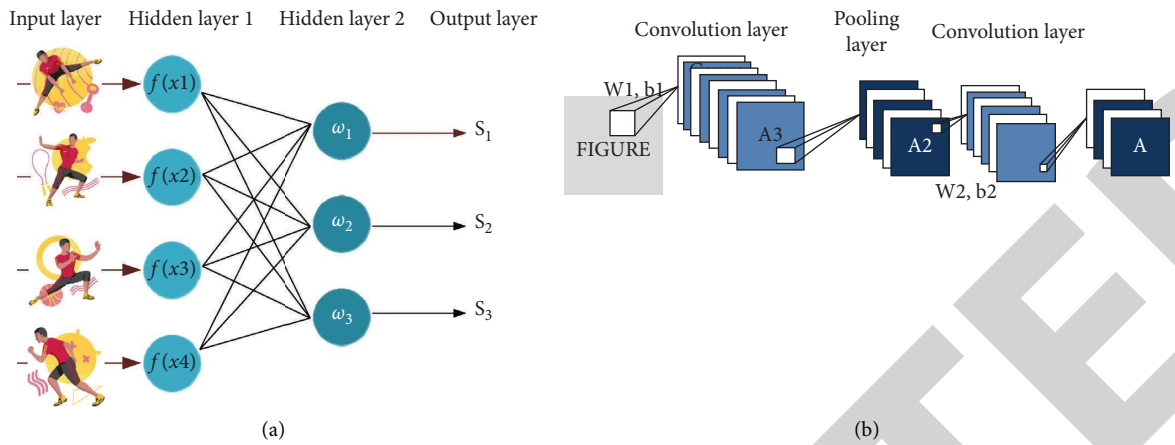

Figure 4: Two typical NN structures. (a) Backpropagation neural network (BPNN). (b) Deep convolutional neural network (DCNN).

Table 4: BP parameters of BPNN and DCNN model.

Attribute	Numerical value
Minimum error of training target	0.1 ms
Training times	300 ms
Realistic frequency	20 time/ms
Additional momentum factor	0.95
Learning rate	0.05%
Maximum number of confirmation failures	5 time

explicit manual programming. ML can be supervised [21–23], unsupervised [24], or reinforced [25], as listed in Table 3.

MV and Natural language processing (NLP) are the most extensive ML applications. Deep learning (DL) is a further extension of ML and is mainly realized through neural network (NN) technologies. Thus, in the ML field, DL is sometimes called the improved NN. Figure 4 illustrates two typical DL NNs [26].

BPNN and DCNN models have unique advantages and disadvantages. Here, they are introduced to analyzing human pose sequence images and selecting suitable body parts for football players to receive the ball. The model parameters are configured in Table 4.

As shown in Table 4, the model's parameters are at the current advanced level. Therefore, optimizing the research design through the proposed model is of great breakthrough significance.

2.3.2. Target Recognition and Feature Extraction (FE). The target recognition process is as follows: (a). image preprocessing (b). target detection (c). FE (d). image classification (e). image tracking.

Here, HLF is selected, a digital image feature used for target recognition. It is similar to the Haar wavelet transform and thus gets its name HLF. It is a real-time face detection algorithm and can be broadly divided into three categories: edge features, linear features, and central features. These features define four basic feature structures, which can be understood as a window. The window will slide with a step

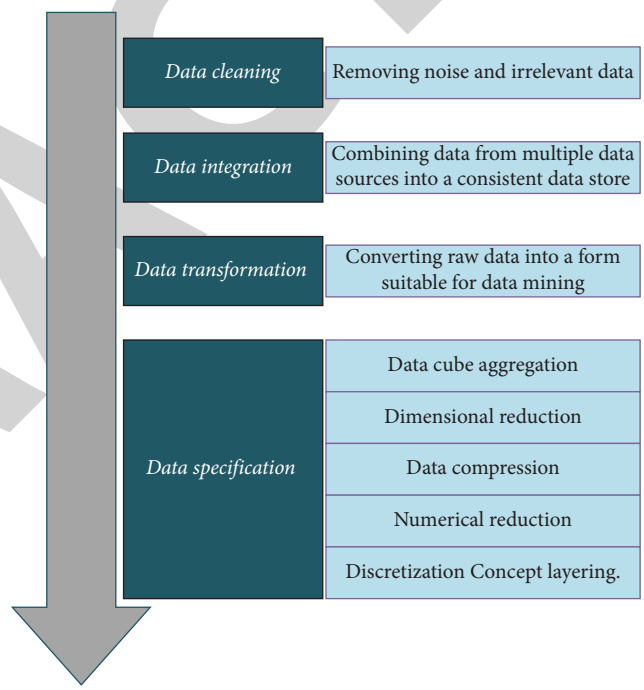

Figure 5: Data preprocessing flow.

size of 1 pixel in the image and finally extracts a complete image [27]. Afterward, the sliding length or width will be increased to repeat the sliding process until the sliding window size reaches a threshold [28, 29]. Figure 5 describes the data preprocessing flow.

In Figure 5, five different technologies are deployed in the data specification. The design has specific significance. It optimizes the data processing program through the continuous aggregation, compression, and dimension reduction of data and by extracting and adjusting data features. Thereby, it maximizes the data standardization and ensures the model's accuracy.

2.3.3. Classification and Recognition Method. The target recognition system needs to use the classifier. In order to design a classifier, FE relies on either supervised or

unsupervised classification methods. The supervised method uses multiple training sample sets to establish a classifier. Supervised classification methods include the NN, support vector machine (SVM, and Adaptive Boosting (Adaboost). The Adaboost algorithm is an iterative algorithm that trains different weak classifiers for the same training set. It combines the weak classifiers to form a strong classifier. Adaboost can handle classification and regression problems. The advantages of Adaboost are: (1) It makes good use of weak classifiers for cascading. (2) Different classification algorithms can be used as weak classifiers. (3) It has high accuracy. (4) Compared with the bagging algorithm and Random Forest (RF), Adaboost fully considers the weight of each classifier [30, 31]. In view of this, this work chooses Adaboost to improve the pose recognition accuracy.

2.4. Recognition Algorithm. The mainstream recognition algorithm is mainly local vision recognition, while there is less research on image recognition using omnidirectional vision. The pose recognition model based on DL is adopted and improved using the HLF and Adaboost algorithm.

First, the video data are collected, preprocessed, and used for the training set. Moreover, the input classifier is constructed and applied to the actual scene. The recognition algorithm obtains several continuous frames from the stable image. Finally, the tracking algorithm is used to improve the algorithm speed. The recognition algorithm will restart the global search and retrack the football player's receiving pose upon a tracking algorithm failure.

2.4.1. Construction of Sample Set. Before applying the Adaboost algorithm, a sample set needs to be constructed for feature training and algorithm recognition. The sample-set consists of the training set and test set.

2.4.2. Flow of Adaboost Iterative Algorithm

(a) The weight distribution of training data is initialized. If there are N samples, each training sample is initially given the same weight, 1/N.

(b) Weak classifiers are trained. Suppose a sample point has been accurately classified in the training process, in that case, its weight will be reduced in constructing the next training set. On the contrary, if a sample point is not accurately classified, its weight will be improved. The weight-updated sample set is used to train the next classifier, and the whole training process goes on iteratively.

(c) Multiple weak classifiers are combined into strong classifiers. The weak classifier's weight with a smaller classification error increases after training. These classifiers play a more decisive role in the final classification. By comparison, the weight of the weak classifier with a larger classification error reduces after training. Thus, these classifiers play a less decisive role in the final classification.

2.4.3. AdaBoost Classification Algorithm. The training sample is set to $T = \{(x_1, y_1), (x_2, y_2), \ldots, (x_m, y_m)\}$. Equation (1) calculates the output weight $D(k)$ of the training set in the kth weak classifier. Then, equation (2) expresses the learning error rate $e_{k(x)}$ of the kth weak classifier $G_{k(x)}$ on the training set. The weight coefficient α_k of kth weak classifier is given in equation (3).

$$D(k) = (\omega_{k1}, \omega_{k2}, \omega_{k3}, \ldots, \omega_{km}); \omega_{1i} = \frac{1}{m}; \quad i = 1, 2, 3, \ldots, m, \tag{1}$$

$$e_{k(x)} = P\left(\frac{G_{k(x1)}}{y_i}\right) = \sum_{i=1}^{m} \omega_{ki}, I\left(\frac{G_{k(x1)}}{y_i}\right), \tag{2}$$

$$\alpha_k = \frac{1}{2}\log\frac{1 - e_k}{e_k}. \tag{3}$$

In equations (1)–(3), ω is the weight of a single classifier, and m represents the number of weak classifiers. The weight coefficient of the sample set of the updated $(k+1)$th weak classifier is displayed in equation (4). Z_k denotes the normalization factor. Equation (4) is updated to equation (5). When the classification is wrong, $y_i G_{k(xi)} < 0$, and the weight increases for the $(k+1)$th weak classifier. If the classification is correct, the weight is reduced for the $(k+1)$th weak classifier.

$$\omega_{k+1,i} = \frac{\omega_{ki}}{Z_k}\exp\left(-\alpha_k y_i G_{k(xi)}\right), \tag{4}$$

$$Z_k = \sum_{i=1}^{m} \omega_{ki}\exp\left(-\alpha_k y_i G_{k(xi)}\right). \tag{5}$$

Finally, the AdaBoost classification problem adopts the weighted-average method (WAM) combined with the strategy. The final strong classifier is expressed in equation (6).

$$f(x) = \operatorname{sign}\left(\sum_{K=1}^{K} \alpha_k y_i G_{k(x)}\right). \tag{6}$$

2.4.4. AdaBoost regression algorithm. Equation (7) presents the relations of maximum error E_k on the training set and the relative error e_{ki} of each sample for the kth weak classifier. Equation (7) considers the case where the loss is linear. When a square error or exponential error is adopted, equation (8) gives the relations of the relative error, the weight coefficient, and the learning error rate e_k for the kth weak classifier. Then, the sample weight is updated, and the sample weight coefficient of $(k+1)$th weak classifier is updated by equation (9). Finally, the AdaBoost regression problem uses the WAM combined with the strategy. The final strong regressor is shown in equation (10).

$$E_k = \max \mid y_i - G_{k(xi)} \mid i = 1, 2, 3, \ldots, m, e_{ki} = \frac{\left| y_i - G_{k(xi)} \right|}{E_k}, \quad (7)$$

$$e_{ki} = 1 - \exp\left(\frac{-y_i + G_{k(xi)}}{E_k}\right), e_k = \sum_{i=1}^{m} \omega_{ki} e_{ki}, \quad (8)$$

$$e_k = \sum_{i=1}^{m} \omega_{ki} e_{ki}, \alpha_k = \frac{e_k}{1 - e_k}, w_{k+1,i} = \frac{\omega_{ki}}{Z_k} \alpha_k^{1-e_{ki}}, \quad (9)$$

$$\begin{aligned} Z_k &= \sum_{i=1}^{m} \omega_{ki} \alpha_k^{1-e_{ki}}, w_{k+1,i} = \frac{\omega_{ki}}{Z_k} \alpha_k^{1-e_{ki}}, f(x) \\ &= \sum_{k=1}^{K} \left(\ln \frac{1}{\alpha_k}\right) G_{k(x)}. \end{aligned} \quad (10)$$

2.4.5. AdaBoost Loss Function. The previous section introduced the weak learner weight coefficient and sampled weight update equations of AdaBoost classification but did not specifically explain the source of the equations. Here, it is deduced through the AdaBoost loss function. AdaBoost model is an additive model. The learning algorithm is a forward distributed learning algorithm, and the loss function is an exponential function.

Suppose the $(k-1)$th and kth strong learners $f_{k-1}(x)$ and $f_k(x)$ are expressed by equation (11), obviously, the strong classifier is obtained step by step through the forward distribution algorithm. The AdaBoost loss function is an exponential function, defined by equation (12) and updated by equations (13) and (14).

$$f_{k-1}(x) = \sum_{k=1}^{k-1} \alpha_i G_{i(x)}, f_{k-1}(x) = \sum_{k=1}^{k} \alpha_i G_{i(x)}, f_k(x) = f_{k-1}(x) + \alpha_k G_{k(x)}, \quad (11)$$

$$\begin{aligned} \left(\alpha_k, G_{k(x)}\right) &= \operatorname{argmin} \sum_{i=1}^{m} \exp\left[(-y_i)\left(f_{k-1}(x) + \alpha_k G_{k(x)}\right)\right] \left(\alpha_k, G_{k(x)} = \operatorname{argmin} \sum_{i=1}^{m} \omega_{ki}' \exp - y_i \alpha_k G_{k(x)}\right) \omega_{ki}' \\ &= \exp\left(-y_i f_{k-1}(x)\right), \end{aligned} \quad (12)$$

$$G_{k(x)} = \operatorname{argmin} \sum_{i=1}^{m} \omega_{ki}', I\left(\frac{y_i}{G(xi)}\right), \alpha_k = \frac{1}{2} \log \frac{1 - e_k}{e_k}, e_k = \frac{\sum_{i=1}^{m} \omega_{ki}', I\left(y_i / G(xi)\right)}{\sum_{i=1}^{m} \omega_{ki}'} = \sum_{i=1}^{m} \omega_{ki}, I\left(\frac{y_i}{G(x_i)}\right), \quad (13)$$

$$w_{k+1,i}' = w_{k,i}' \exp\left[-y_i \alpha_k G_k(x_i)\right], w_{k+1,i}' = \frac{w_{k,i}}{Z_k} \exp\left[-y_i \alpha_k G_k(x_i)\right], Z_k = \sum_{i=1}^{m} w_{ki} \exp - y_i \alpha_k G_k(x_i). \quad (14)$$

2.5. Simulation Experiment. A simulation comparison test is designed to verify the performance of the proposed MV-based players' pose FE model. Then, the proposed model is compared with the pose FE model based on Halcon and Industrial Robot Vision System Development (IRVSD). Here, the Adaboost method is used for research, and a Canadian EC650 C camera is selected for image data acquisition.

Massive training is needed, so hundreds of images are selected to build the training set. Based on this, the pose images of 11 players of a team are collected, a total of 300 athlete images. The stability of different ball-receiving body parts is evaluated, including the foot arch, the instep, the sole on foot, the chest, the leg, and the head. Meanwhile, the biomechanical characteristics of different ball-receiving body parts are analyzed by factoring in the joint displacement. X is set as the direct direction of the receiving body part, Y as the vertical-horizontal direction of the receiving body part, and Z as the vertical direction.

3. Sports Biomechanical and Pose Sequence Image Analysis of Football Receiving Body Part

3.1. Sports Biomechanical Analysis of Football Receiving Pose. Tables 5 and 6 analyze the sports biomechanical characteristics of football players.

Tables 5 and 6 show that the angles of the hip, knees, and ankle joints will also change when the athlete receives the rebound ball with the foot arch. When athletes receive the rebound ball with the foot arch, the main angular velocity is the rebound of the ankle joint, and its acceleration is relatively obvious. The speed of the hip and knee joints remains stable, and their acceleration does not change significantly. There is no obvious change in the acceleration of the ankle joint in the process of receiving.

Table 5: The average change of hip joint displacement angle of 11 athletes receiving the ball using the foot arch.

Direction	Receiving position (°)	Body support (°)	Receiving moment (°)	Pose after receiving (°)
X	−703.26 ± 171.25	−469.62 ± 210.33	−114.42 ± 162.83	129.12 ± 104.36
Y	−541.54 ± 97.22	−514.67 ± 83.91	−513.62 ± 95.64	−542 ± 105.63
Z	939.74 ± 41.62	1107.64 ± 50.29	1007.49 ± 63.82	897.64 ± 92.56

Table 6: The average changes of hip, knee, and ankle displacement angles of 11 athletes receiving the ball using the foot arch.

Joint	Receiving position (°)	Body support (°)	Receiving moment (°)	Pose after receiving (°)
Hip	95.63 ± 5.42	109.52 ± 3.44	102.01 ± 1.74	117.08 ± 4.36
Knee	148.16 ± 8.57	90.21 ± 81.57	161.74 ± 2.53	534 ± 7.51
Ankle	110.41 ± 5.45	103.52 ± 5.12	102.36 ± 6.74	108.53 ± 9.71

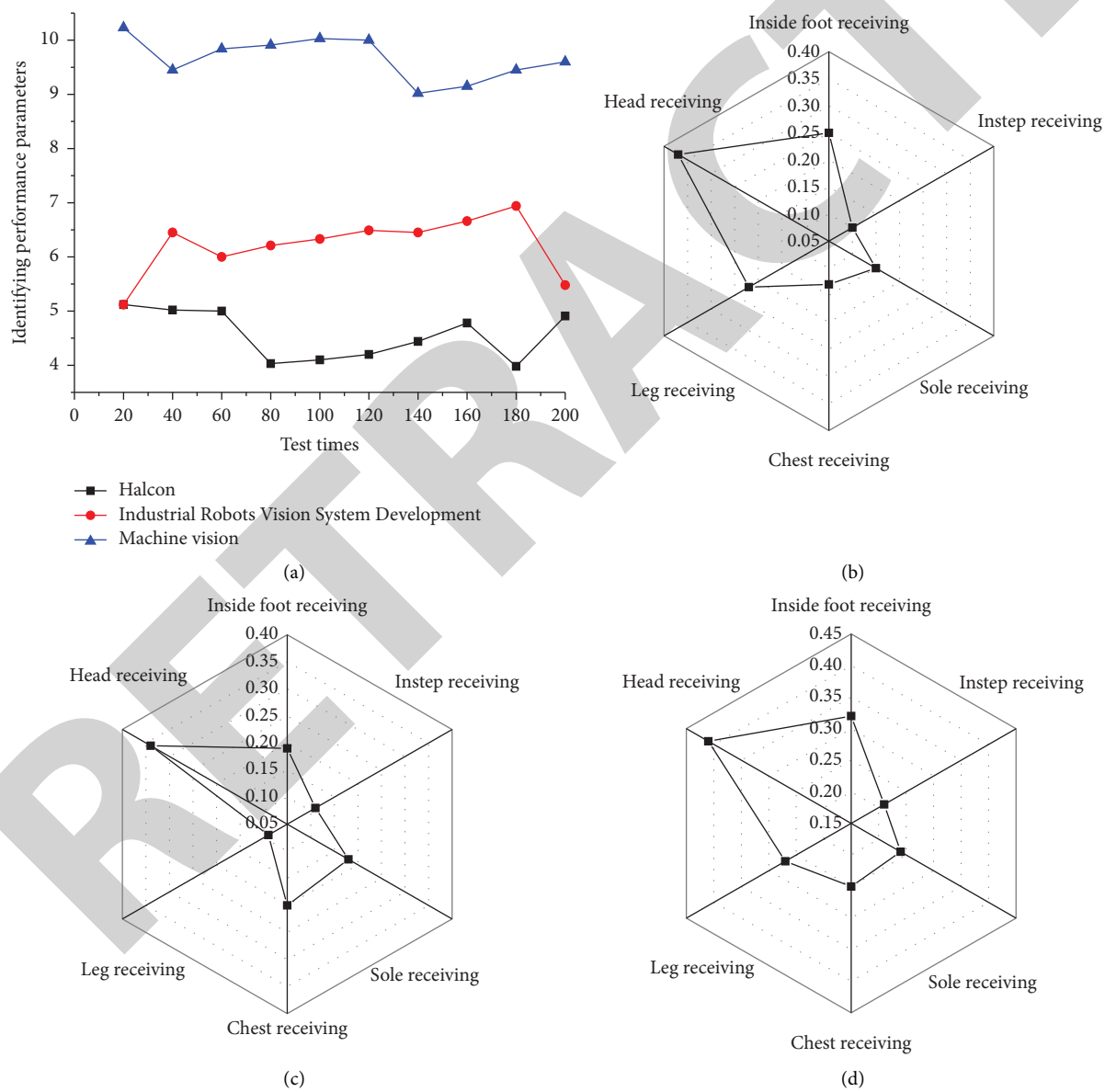

Figure 6: Accuracy and stability, (a) pose recognition parameters, (b) recognition parameters based on Halcon, (c) recognition parameters based on IRVSD platform, (d) recognition parameters based on MV.

The ankle and knee displacement range remain a straight line in receiving control and analysis. The speed of football can be controlled based on receiving control. Its sports biomechanics mainly focuses on the acceleration changes of the hip and ankle.

3.2. FE Accuracy and Stability of Ball Receiving Pose. The ball-receiving pose recognition parameters represent the accuracy of FE. The more the pose recognition parameters are, the more accurate FE is. This is because more factors will be included with more parameters, and the system can extract various features. By comparison, a small number of parameters are less representative of the overall features, resulting in some accidental results. Figure 6 plots the predicted stability of ball received by different body parts by the proposed football players-oriented ball-receiving pose FE model based on Halcon.

Figure 6 shows that the recognition effect of the three methods on the ball-receiving action declines first and then rises slowly over the test times. The recognition parameter of the traditional method based on the Halcon recognition action system is 5.12 at 20 times, and then it declines. When the training times reach 80 times, it slowly rises again. When the training reaches 200 times, it rises to 4.91 but does not return to the initial 5.12. In contrast, the identification parameters based on the IRVSD platform are much higher than those based on Halcon, which slightly decrease when the training times are 60 and then gradually increase. However, the recognition parameters based on the proposed MS are far higher than the two traditional methods and maintained at about 10. This is because the proposed MS method extracts the foul image features, establishes the action sequence's potential function, and analyzes it in more detail, thus improving the accuracy. The proposed MS method is also higher than the other two traditional methods in the stability evaluation of the ball receiving on the inside of the foot, on the back of the foot, on the sole, on the chest, on the leg, and on the head. Therefore, the results show that the stability and accuracy of the players' pose sequence image analysis based on the proposed MV are better than the traditional methods. Obviously, the inside of the foot is the best place to receive the ball. Compared with the research of Thapa et al., this work makes use of a more advanced DL model and carries out a more comprehensive design and evaluation on optimizing the model. It has improved the effect of football training to a greater extent [32].

4. Conclusion

This work studies using different body parts based on MV to recognize and evaluate the football players' ball-receiving pose. Based on human pose sequence analysis and sports biomechanics, an MV-based players' pose FE model is proposed. The experimental dataset images are collected from the football game through the camera. HLF and the Adaboost algorithm are used to build the model. Combined with biomechanics, this work analyzes players' ball-receiving effect using different body parts. The proposed MV-based players' pose FE model is compared with the traditional recognition model, and some beneficial results are obtained. The numerical result indicates that the proposed MV-based players' pose FE model based on HLF and Adaboost can successfully recognize the receiving pose and receiving effect. Its performance is better than other mainstream algorithms.

Additionally, there are still some research deficiencies. The following factors may limit the conclusions. The algorithm has insufficient recognition for poses in high-intensity professional competitions. Hence, more formal competition pose data will be collected in the future. The pose recognition of multiathlete overlapping images is not enough. In this regard, the image data preprocessing of multiathlete overlapping images will be improved in the follow-up works.

Data Availability

The raw data supporting the conclusions of this article will be made available by the authors, without undue reservation.

Ethical Approval

This article does not contain any studies with human participants or animals performed by any of the authors.

Informed consent was obtained from all individual participants included in the study.

Conflicts of Interest

The authors declare that they have no conflicts of interest.

Acknowledgments

The authors acknowledged the help from the university colleagues.

References

[1] P. Bossuyt, S. Vermeire, and R. Bisschops, "Assessing disease activity in ulcerative colitis using artificial intelligence: can "equally good" Be seen as "better"," *Gastroenterology*, vol. 159, no. 4, pp. 179–183, 2020.

[2] F. Riguzzi, K. Kersting, M. Lippi, and S. Natarajan, "Editorial: statistical relational artificial intelligence," *Frontiers in Robotics and AI*, vol. 6, no. 2, p. 68, 2019.

[3] A. Alexon, B. Insanistyo, B. Rajjab, and N. Novriansyah, "The influence of inquiry methods and motor educability on dribbling skills in soccer," *Kinestetik: Jurnal Ilmiah Pendidikan Jasmani*, vol. 5, no. 1, pp. 171–178, 2021.

[4] D. Davey, S. Malone, and B. Egan, "Case study: transition to a vegan diet in an elite male gaelic football player," *Sports*, vol. 9, no. 1, p. 6, 2021.

[5] F. G. Caetano, S. Barbon Junior, R. S. Torres et al., "Football player dominant region determined by a novel model based on instantaneous kinematics variables[J]," *Scientific Reports*, vol. 11, no. 1, pp. 1–10, 2021.

[6] N. Li, A. Johnson, S. Williams, N. Smith, B. Hale, and K. Thorborg, "Injuries in youth football and the relationship to player maturation: an analysis of time-loss injuries during four seasons in an English elite male football academy[J],"

Scandinavian Journal of Medicine & Science in Sports, vol. 31, no. 6, pp. 1324–1334, 2021.

[7] J. C. Casey, R. H. Lutz, B. L. Boswell, and A. S. Ceraulo, "Transient quadriplegia in a high school football player," *Current Sports Medicine Reports*, vol. 20, no. 5, pp. 246–249, 2021.

[8] S. Sun, O. Faude, B. Gärtner, T. Meyer, and F. Egger, "Risk of SARS-CoV-2 transmission from on-field player contacts in amateur, youth and professional football (soccer)[J]," *British Journal of Sports Medicine*, vol. 56, no. 3, pp. 158–164, 2022.

[9] A. Martyshkin, "Motion planning algorithm for a mobile robot with a smart machine vision system[J]," *Nexo Revista Científica*, vol. 33, no. 2, pp. 651–671, 2021.

[10] B. Kvstad, T. Nordtug, and A. Hagemann, "A machine vision system for tracking population behavior of zooplankton in small-scale experiments: a case study on salmon lice (Lepeophtheirus salmonis Kryer, 1838) copepodite population responses to different light stimuli[J]," *Biology Open*, vol. 9, no. 6, pp. 257–259, 2020.

[11] Y. Kimura, A. Kimura, and F. Shibata, "Representing virtual transparent objects on optical see-through head-mounted displays based on human vision," *Applied Sciences*, vol. 11, no. 2, p. 495, 2021.

[12] Y. Liu, L. Guo, H. Gao, Z. You, Y. Ye, and B. Zhang, "Machine vision based condition monitoring and fault diagnosis of machine tools using information from machined surface texture: a review," *Mechanical Systems and Signal Processing*, vol. 164, no. 11, Article ID 108068, 2022.

[13] M. Talaat, I. Arafa, and H. Metwally, "Advanced automation system for charging electric vehicles based on machine vision and finite element method," *IET Electric Power Applications*, vol. 14, no. 13, pp. 2616–2623, 2020.

[14] O. Geffen, Y. Yitzhaky, N. Barchilon, S. Druyan, and I. Halachmi, "A machine vision system to detect and count laying hens in battery cages," *Animal*, vol. 14, no. 12, pp. 2628–2634, 2020.

[15] H. Kim, "CMOS image sensor for wide dynamic range feature extraction in machine vision[J]," *Electronics Letters*, vol. 57, no. 5, pp. 612–617, 2021.

[16] A. Koirala, K. Walsh, and Z. Wang, "Attempting to estimate the unseen-correction for occluded fruit in tree fruit load estimation by machine vision with deep learning," *Agronomy*, vol. 11, no. 2, p. 347, 2021.

[17] S. Harnsoongnoen and N. Jaroensuk, "The grades and freshness assessment of eggs based on density detection using machine vision and weighing sensor[J]," *Scientific Reports*, vol. 11, no. 1, p. 167, 2021.

[18] R. Rohmatullah, R. Marlina, and R. Gani, "Level of passing skills in soccer learning," *Jp.jok (Jurnal Pendidikan Jasmani, Olahraga dan Kesehatan)*, vol. 4, no. 1, pp. 35–45, 2020.

[19] I. Basevitch, G. Tenenbaum, E. Filho, and N. Boiangin, "Anticipation and situation-assessment skills in soccer under varying degrees of informational constraint[J]," *Journal of Sport & Exercise Psychology*, vol. 42, no. 1, pp. 1–11, 2019.

[20] A. Edis, "Change of direction run tests: an issue for soccer technical skills[J]," *AmbientI science*, vol. 8, no. 1, pp. 1–8, 2021.

[21] M. Matabuena, S. Riazati, N. Caplan, and P. Hayes, "Are Multilevel functional models the next step in sports biomechanics and wearable technology? A case study of Knee Biomechanics patterns in typical training sessions of recreational runners," *ET Journal*, vol. 6, no. 4, pp. 121–128, 2021.

[22] R. Radakovi and N. Filipovic, "Sport biomechanics: experimental and computer simulation of knee joint during jumping and walking - ScienceDirect[J]," *Computational Modeling in Bioengineering and Bioinformatics*, vol. 4, no. 3, pp. 387–418, 2020.

[23] B. Trasnea, C. Ginerica, M. Zaha, G. Măceşanu, C. Pozna, and S. Grigorescu, "OctoPath: an OcTree based self-supervised learning approach to local trajectory planning for mobile robots[J]," *Sensors*, vol. 5, no. 3, p. 21, 2021.

[24] P. Schwaller, B. Hoover, J. Reymond, H. Strobelt, and T. Laino, "Extraction of organic chemistry grammar from unsupervised learning of chemical reactions[J]," *Science Advances*, vol. 7, no. 15, pp. 4166-4167, 2021.

[25] B. Moster, N. Thorsten, L. Magnus, and J. A. O'Leary, "GalaxyNet: connecting galaxies and dark matter haloes with deep neural networks and reinforcement learning in large volumes[J]," *Monthly Notices of the Royal Astronomical Society*, vol. 2, p. 2, 2021.

[26] J. Hernandez, Z. Díaz, M. Segovia, J. Fernández, and E. Pozo, "Machine learning and statistical techniques. An application to the prediction of insolvency in Spanish non-life insurance companies[J]," *International Journal of Digital Accounting Research*, vol. 5, no. 9, pp. 1–45, 2020.

[27] S. O. Adeshina, H. Ibrahim, S. Teoh, and S. C. Hoo, "Custom face classification model for classroom using haar-like and LBP features with their performance comparisons," *Electronics*, vol. 10, no. 2, p. 102, 2021.

[28] H. Li, F. Li, R. Jia, F. Zhai, L. Bai, and X. Luo, "Research on the fault feature extraction of rolling bearings based on SGMD-CS and the AdaBoost f," *Energies*, vol. 14, no. 6, p. 1555, 2021.

[29] G. Jiménez-García, T. Gutiérrez-Tobal, M. García et al., "Assessment of airflow and oximetry signals to detect pediatric sleep apnea-hypopnea syndrome using AdaBoost," *Entropy*, vol. 22, no. 6, p. 670, 2020.

[30] F. Muharam, K. Nurulhuda, Z. Zulkafli et al., "UAV- and random-forest-AdaBoost (RFA)-Based estimation of rice plant traits," *Agronomy*, vol. 11, no. 5, p. 915, 2021.

[31] P. Nguyen, D. Ha, A. Jaafari et al., "Groundwater potential mapping combining artificial neural network and real AdaBoost ensemble technique: the DakNong province case-study, vietnam[J]," *International Journal of Environmental Research and Public Health*, vol. 17, no. 7, p. 2437, 2020.

[32] R. Thapa, F. Clemente, J. Moran, F. Garcia-Pinillos, A. T. Scanlan, and R. Ramirez-Campillo, "Warm-up optimization in amateur male soccer players: a comparison of small-sided games and traditional warm-up routines on physical fitness qualities[J]," *Biology of Sport*, vol. 40, no. 1, pp. 321–329, 2022.