Mathematical Problems in Engineering
Volume 4, pp. 317–367
Reprints available directly from the publisher
Photocopying permitted by license only

Theory and Computation of Disturbance Invariant Sets for Discrete-Time Linear Systems

ILYA KOLMANOVSKY and ELMER G. GILBERT*

Department of Aerospace Engineering, The University of Michigan, 1320 Beal Avenue, Ann Arbor, MI 48109-2140, USA

(Received 31 October 1997)

This paper considers the characterization and computation of invariant sets for discrete-time, time-invariant, linear systems with disturbance inputs whose values are confined to a specified compact set but are otherwise unknown. The emphasis is on determining maximal disturbance-invariant sets X that belong to a specified subset Γ of the state space. Such d-invariant sets have important applications in control problems where there are pointwise-in-time state constraints of the form $x(t) \in \Gamma$. One purpose of the paper is to unite and extend in a rigorous way disparate results from the prior literature. In addition there are entirely new results. Specific contributions include: exploitation of the Pontryagin set difference to clarify conceptual matters and simplify mathematical developments, special properties of maximal invariant sets and conditions for their finite determination, algorithms for generating concrete representations of maximal invariant sets, practical computational questions, extension of the main results to general Lyapunov stable systems, applications of the computational techniques to the bounding of state and output response. Results on Lyapunov stable systems are applied to the implementation of a logic-based, nonlinear multimode regulator. For plants with disturbance inputs and state-control constraints it enlarges the constraint-admissible domain of attraction. Numerical examples illustrate the various theoretical and computational results.

Keywords: Invariant sets; Linear systems; Discrete-time; Disturbance inputs; Bounded inputs; Algorithms

* Corresponding author. Tel.: 313 7643355. Fax: 313 7630578.
E-mail: elmerg@umich.edu.

1 INTRODUCTION

Consider the linear, time-invariant, discrete-time system

$$x(t+1) = Ax(t) + Bw(t), \tag{1.1}$$

$$y(t) = Cx(t) + Dw(t), \tag{1.2}$$

where $t \in \mathbf{Z}^+$, the set of non-negative integers; $x(t) \in \mathbb{R}^n$, $w(t) \in \mathbb{R}^m$, $y(t) \in \mathbb{R}^p$; A, B, C, D are real matrices of appropriate dimension. Let $W \subset \mathbb{R}^m$ and use the notation $w \in \mathcal{W}$ to represent disturbance sequences $\{w(t) \in W\colon t \in \mathbf{Z}^+\}$.

A set $X \subset \mathbb{R}^n$ is positively-invariant under the disturbance flow of (1.1) or, more simply, d-invariant if $A\phi + B\psi \in X$ for all $\phi \in X$ and $\psi \in W$. Invariant sets are of special interest because they characterize the evolution of the system for all possible $w \in \mathcal{W}$. Invariant sets have, of course, played an important role in the theory of linear systems. See, for example, [38,45]. In most of this theory $w(t)$ belongs to a linear space. Only in the last decade has there been increased interest in the case examined here where W is bounded.

In particular, we are interested in characterizing the extent of possible motions of (1.1), (1.2). For example, given a set $\Gamma \subset \mathbb{R}^n$, what initial conditions $x(0)$ assure $x(t) \in \Gamma$ for all $t \in \mathbf{Z}^+$. The connection to d-invariant sets is clear. If X is d-invariant and $X \subset \Gamma$, then $x(0) \in \Gamma$ implies $x(t) \in \Gamma$ for all $t \in \mathbf{Z}^+$. How are such Γ-constrained d-invariant sets obtained? Our response to this question revolves about three closely connected topics:

I. Conditions on sets X that imply they are d-invariant.
II. Properties of the maximal d-invariant subset of Γ.
III. Algorithms for constructing concrete representations of d-invariant sets.

We have strong motivations in pursuing these topics in the context of (1.1), (1.2). In engineering applications the validity of linear system models is often limited more by the presence of "hard" constraints, such as pointwise-in-time limits on acceleration and range of mechanical displacements, than on their inaccuracy in representing the dynamics of nonlinear systems. Since hard constraints take the

form $x(t) \in \Gamma$, d-invariant subsets of Γ have a close relationship with control-system analysis and synthesis and controller implementation. These relationships have little practical value unless the invariant sets have concrete, computable representations. Hence our interest in topic III and in discrete-time systems. Beyond its obvious inherent interest, topic II is closely connected to topic III. It turns out that maximal d-invariant sets lend themselves naturally to algorithmic determination.

Our treatment of hard constraints is based on output constraints of the form $y \in \mathcal{Y} = \{y(t) \in Y\colon\ t \in \mathbf{Z}^+\}$ where $Y \subset \mathbb{R}^p$ is bounded. The set of all initial conditions which cause this constraint to be met is called the *maximal output admissible* set. It is denoted by $O_\infty(A, B, C, D, W, Y)$, or simply O_∞ when the arguments are clear from context. To be explicit

$$O_\infty = \{x(0) \in \mathbb{R}^n\colon\ y(t) \in Y\ \forall t \in \mathbf{Z}^+ \text{ and } \forall w \in \mathcal{W}\}, \tag{1.3}$$

where

$$\begin{aligned} y(t) &= Cx(0) + Dw(0), \quad t = 0, \\ &= CA^t x(0) + \sum_{k=0}^{t-1} CA^{(t-k-1)} Bw(k) + Dw(t), \quad t \geq 1. \end{aligned} \tag{1.4}$$

Clearly,

$$x(0) \in O_\infty \Rightarrow x(1) = Ax(0) + Bw(0) \in O_\infty\ \forall w(0) \in W. \tag{1.5}$$

Thus, O_∞ is d-invariant. The constraint on the output imposes, implicitly, a constraint on the state of the form $x(t) \in \Gamma$ where

$$\Gamma = \{\phi \in \mathbb{R}^n\colon\ C\phi + D\psi \in Y\ \forall \psi \in W\}. \tag{1.6}$$

Hence it is feasible to eliminate (1.2) and Y from further consideration. There are good reasons for not doing so. Physically-based constraints are often on just a few system variables and it may be possible to take advantage of the resulting algebraic structure, for example, to improve algorithmic efficiency. Note also that state constraints $x(t) \in \Gamma$ can be treated in the context of O_∞ by setting

$C = I_n$ and $Y = \Gamma$. Since O_∞ contains *all* initial conditions that imply $x(t) \in \Gamma$, $t \in \mathbb{Z}^+$, it follows that O_∞ is the *maximal* d-invariant subset of Γ.

Recursion and finite determination play a critical role in the characterization of maximal output admissible sets. Let

$$O_t = \{x(0) \in \mathbb{R}^n\colon\ y(k) \in Y \quad k = 0, \ldots, t \text{ and } \forall w \in \mathcal{W}\}. \tag{1.7}$$

From (1.2), (1.6) and (1.7) it is easy to verify that

$$\begin{aligned} O_0 &= \Gamma, \\ O_{t+1} &= \{\phi \in \mathbb{R}^n\colon\ C\phi + D\psi \in Y,\ A\phi + B\psi \in O_t\ \forall \psi \in W\} \\ &= \{\phi \in \Gamma\colon\ A\phi + B\psi \in O_t\ \forall \psi \in W\}, \quad t \in \mathbb{Z}^+. \end{aligned} \tag{1.8}$$

If there exists a $t \in \mathbb{Z}^+$ such that $O_\infty = O_t$ we say that O_∞ is *finitely determined.* Thus, finite determination is crucial in the development of algorithms for the construction of maximal d-invariant sets.

Since the literature on invariant sets is large, we limit our review of it to a sampling of the works on discrete-time linear systems that are most closely connected with the topics treated in this paper. Additional papers may be found in the cited references. The disturbance free case, $W = \{0\}$, has been studied extensively. Obvious examples of invariant sets are the invariant subspaces of A and sublevel sets of quadratic Lyapunov functions. A variety of conditions has been given [6,7,44] which guarantee that a *specified* polyhedral set $X \subset \mathbb{R}^n$ is positively invariant. Gilbert and Tan [19] considered the *maximal* positively invariant set belonging to $\Gamma = \{x \in \mathbb{R}^n\colon\ Cx \in Y\}$, i.e., $O_\infty(A, 0, C, 0, \{0\}, Y)$ in our present notation. They investigate properties of O_∞ and show that under reasonable conditions it is finitely-determined and has simple, easily computed characterizations. They and Kolmanovsky have used the characterizations to develop a variety of nonlinear feedback controllers which enforce pointwise-in-time constraints and enlarge the set of initial conditions and/or inputs over which constraints are satisfied [19–22,42,43]. For systems with disturbance inputs, the earliest literature goes back to the set-valued control theory of Glover, Schweppe, Bertsekas and Rhodes [4,5,23,40]. Basic developments in these works underlie many of the developments which have

occurred since. Concepts most closely connected with this paper are elliptical bounds [23,40] and the largest strongly reachable set [4]. More recently, Blanchini and others consider a variety of situations in which polyhedral sets are d-invariant [8–11,17]. Issues related to maximal d-invariant sets and recursions can be found in [3,5,10–12,30,42]. Finite determination is addressed in [10,12,30]. Applications of maximal d-invariant sets to controller design and implementation are considered in [22,31].

This paper is more narrowly focused than most of the preceding papers, centered as it is, on the characterization and computation of constrained d-invariant sets for the system (1.1), (1.2). Thus, it is possible for us to pull together and develop more elegantly a wide variety of disparate results from the prior literature, often extending them by obtaining stronger conclusions under weaker hypotheses. Entirely new results are obtained also. The emphasis on algorithmic techniques is unique and important. If d-invariant sets are to reach their full potential in practical applications, computational tools will be needed.

A key ingredient in our effort to clarify conceptual issues and simplify mathematical derivations is the set operation of Minkowski subtraction or P-subtraction. Suppose $U, V \subset \mathbb{R}^n$. Then the P-*difference* U minus V is:

$$U \sim V = \{z \in \mathbb{R}^n\colon\ z + v \in U\ \forall\ v \in V\}. \tag{1.9}$$

The prefix P acknowledges Pontryagin [35] who appears to be the first person who have used the difference in control theory. The difference appeared much earlier, at least as far back as 1948, in the Brunn–Minkowski theory of mixed volumes (see [25,39] for details). Other early references pertaining to its explicit or implicit use in control theory include: [4,5,15,23,27]. More lengthy investigations of the P-difference and its properties can be found in [16,25,26, 32,36,39]. The recursion (1.8) illustrates the notational advantage of the P-difference. Let BW denote the image of W under the mapping B. Then,

$$O_{t+1} = \{\phi \in \Gamma\colon\ A\phi \in O_t \sim BW\}. \tag{1.10}$$

The paper is organized as follows. Section 2 presents a comprehensive summary of results on P-subtraction. Most of them have

appeared previously, while some are new (e.g., Theorem 2.5) or stated under weaker conditions. For completeness short proofs are given. Section 3 addresses topic I. It is mostly a reprise of the conditions stated in the literature, using to advantage properties of P-subtraction. The set, F, of states ultimately reachable from $x(0)=0$ is d-invariant and minimal over the class of closed d-invariant sets. Not surprisingly, it appears throughout the paper. It and d-invariant families of ellipsoidal sets are discussed in Section 4. Basic properties of O_∞ are derived in Section 5. There is overlap with earlier results on maximal invariant sets, but our assumptions are generally weaker and are based on Y rather than Γ. For example, it is not necessary to assume that Y is polyhedral or convex or that A is asymptotically stable. Algorithms for generating O_∞ are treated in Section 6. Conditions for finite determination are given and computational details are discussed at length. The important case where Y is polyhedral is emphasized. It is shown in Theorem 6.3 that increasingly accurate polyhedral approximations to nonpolyhedral Y generate increasingly accurate approximations of O_∞. Finite determination depends on the assumption that A is asymptotically stable. In Section 7 it is shown that accurate approximations of O_∞ can be computed if A is only Lyapunov stable. The results hold under weaker conditions than were stated in [19] for the disturbance-free case. It is of interest to determine O_∞ when it is parametrized by a constant input added to right sides of (1.1), (1.2). This question is also considered in Section 7. The paper concludes with two sections on applications of the preceding results. Section 8 describes in general terms algorithmic methods for solving two problems: the determination of sets which approximate and bound F; the determination of bounds on the induced norm of $\mathcal{L}$: $l_\infty^m \to l_\infty^p$, the input–output operator associated with (1.1), (1.2). Section 9 considers a variant of the nonlinear, multimode regulator proposed in [31]. It uses the results of Section 7 to define a regulator that enlarges the constraint-admissible domain of attraction.

We conclude this section with notations, a review of some well-known results [37,39] and basic assumptions on problem data. The vector $x \in \mathbb{R}^n$ is interpreted as a column matrix with elements x^i. Its p-norm is $|x|_p$. The superscript T indicates matrix transpose. The interior, closure, convex hull and the extreme points of a set are

denoted respectively by *int*, *cl*, *co* and *ex*. The empty set is $\emptyset$; $\mathcal{B}^n = \{x \in \mathbb{R}^n\colon\ |x|_2 \leq 1\}$. Let $U, V \subset \mathbb{R}^n$, $\alpha, \beta \in \mathbb{R}$ and $G, H \subset \mathbb{R}^{n \times m}$. The image of U under G is GU. Scalar multiplication and Minkowski summation are defined by $\alpha U = \{\alpha u\colon\ u \in U\}$ and $U + V = \{u + v\colon\ u \in U,\ v \in V\}$. These operations allow formation of weighted sums of sets without regard to the ordering and association of terms in the sums. However, the association of scalar and matrix multipliers is greatly restricted. The equality $\alpha U + \beta U = (\alpha + \beta) U$ is not generally valid; it does hold if U is convex and $\alpha, \beta \geq 0$. Even when U is convex it is generally not true that $GU + HU = (G + H) U$. The set U is symmetric if $U = (-1)U = -U$. If U and V are (bounded) [closed] {convex}, then $U + V$ is (bounded) [closed] {convex}.

The support function of U, evaluated at $\eta \in \mathbb{R}^n$, is

$$h_U(\eta) = \sup_{u \in U} \eta^{\mathrm{T}} u. \tag{1.11}$$

The domain, $K_U \subset \mathbb{R}^n$, on which the support function is defined is a convex cone with vertex at the origin; specifically, for $\eta \notin K_U$, $\eta^{\mathrm{T}} u$ is unbounded from above on U. If U is bounded, $K_U = \mathbb{R}^n$. Suppose U is closed and convex. Then $U = \{u\colon\ \eta^{\mathrm{T}} u \leq h_U(\eta),\ \eta \in K_U\}$, the intersection of its supporting half spaces; moreover, $V \subset U$ if and only if $h_V(\eta) \leq h_U(\eta)$ for all $\eta \in K$. Testing the inclusion $V \subset U$ is much easier when U is the polyhedron,

$$U = \{u\colon s_i^{\mathrm{T}} u \leq r_i, \quad i = 1, \ldots, N\}. \tag{1.12}$$

Then $V \subset U$ if and only if $h_V(s_i) \leq r_i$, $i = 1, \ldots, N$. For $\alpha \geq 0$, $u \in \mathbb{R}^n$, $\mu \in \mathbb{R}^m$, $G^{\mathrm{T}} \mu \in K_U$, the following identities are easily confirmed: $h_U(\eta) = h_{coU}(\eta)$, $h_U(\alpha\eta) = \alpha h_U(\eta)$, $h_{\{u\} + U}(\eta) = \eta^{\mathrm{T}} u + h_U(\eta)$, $h_{U+V}(\eta) = h_U(\eta) + h_V(\eta)$, $h_{GU}(\mu) = h_U(G^{\mathrm{T}} \mu)$. Furthermore, if U is compact it follows that $coU = co(exU)$ and $h_U(\eta) = h_{exU}(\eta)$.

In what follows it is necessary to both characterize and numerically evaluate support functions. In many situations this can be done using the preceding identities and simple observations such as: $U = \{u\colon\ u^{\mathrm{T}} P^{-1} u \leq 1\}$, $P = P^{\mathrm{T}} > 0$ implies $h_U(\eta) = \sqrt{\eta^{\mathrm{T}} P \eta}$; $U = \{u\colon\ |u|_p \leq 1\}$, $1 \leq p \leq \infty$ implies $h_U(\eta) = |\eta|_q$, $p^{-1} + q^{-1} = 1$; $U = co\{u_i\colon\ i = 1, \ldots, N\}$ implies $h_U(\eta) = \max \eta^{\mathrm{T}} u_i$, $i = 1, \ldots, N$; when U is the polyhedron (1.12) $h_U(\eta)$ is the solution of the linear program (LP), maximize $\eta^{\mathrm{T}} u$ subject to $s_i^{\mathrm{T}} u \leq r_i$, $i = 1, \ldots, N$.

Finally, it is assumed hereafter that the problem data, A, B, C, Y, W satisfy the following assumptions:

(A1) Both W and Y are compact and contain the origin,
(A2) The pair (C, A) is observable.

While these restrictions are a bit stronger than what is needed for a few of our results they are quite natural and simplify the presentation. In fact, (A2) is not really restrictive since the constraint $y(t) \in Y$, $t \in \mathbf{Z}^+$, acts only on the "observable coordinates" of (1.1)–(1.2) and O_∞ is determined entirely by the observable coordinates (the precise details are essentially the same as those described in [19].

2 THE PONTRYAGIN DIFFERENCE

Basic properties of the P-difference are summarized in the following theorem. They have appeared in one form or another in the literature. See, for example, [25,36,39].

THEOREM 2.1 *Let $U, V \subset \mathbb{R}^n$ and assume that $U \sim V \neq \emptyset$. Then the following results hold.* (i) $U \sim V = \bigcap_{v \in V}(U - \{v\})$. (ii) $(U \sim V) + V \subset U$. (iii) $0 \in V$ *implies* $U \sim V \subset U$. (iv) $U = \{\bar{u}\} + \alpha \bar{U}, V = \{\bar{v}\} + \alpha \bar{V}$ *and* $\alpha \in \mathbb{R}$ *implies* $U \sim V = \{\bar{u} - \bar{v}\} + \alpha(\bar{U} \sim \bar{V})$. (v) $V = V_1 + V_2$ *implies* $U \sim V = (U \sim V_1) \sim V_2 = (U \sim V_2) \sim V_1$. (vi) $U = U_1 \bigcap U_2$ *implies* $U \sim V = (U_1 \sim V) \bigcap (U_2 \sim V)$. (vii) $V = V_1 \bigcup V_2$ *implies* $U \sim V = (U \sim V_1) \bigcap (U \sim V_2)$. (viii) *If* $G \in \mathbb{R}^{m \times n}$ *has rank* n, *then* $GU \sim GV = G(U \sim V)$. (ix) *If* U, V *are symmetric*, $U \sim V$ *is symmetric*. (x) *If* U *is* (*bounded*) [*closed*] {*convex*}, $U \sim V$ *is* (*bounded*) [*closed*] {*convex*}. (*xi*) *If* U, V *are symmetric and convex*, *then* $0 \in u \sim V$. (xii) *If* U *is convex*, *then* $U \sim V = U \sim coV$. (xiii) $V = co\{v_i, i = 1, \ldots, N\}$ *implies* $U \sim V = \bigcap_{i=1,\ldots,N} (U \sim \{v_i\})$. (xiv) *If* V *is compact*, *then* $U \sim V = U \sim exV$.

Proof Results (i)–(ix) are easy consequences of the definition of $U \sim V$. The boundness result in (x) follows from (ii); closure and convexity follow from (i). By (ix) and (x), the assumptions in (xi) imply that $U \sim V$ is symmetric and convex; thus $z \in U \sim V$ implies $-z \in U \sim V$ and $\frac{1}{2}z + \frac{1}{2}(-z) = 0 \in U \sim V$. Consider (xii). Let $z \in U \sim V$,

$v_i \in V$ and $\alpha_i \in \mathbb{R}$ satisfy $\alpha_i \geq 0$, $\Sigma\alpha_i = 1$. Then, $z + v_i \in U$ and, by the convexity of U, $z + \sigma\alpha_i v_i \subset U$. Property (xiii) follows immediately from (i) and (xii). Similarly, (xiv) follows from (xii) and because for V compact, $coV = co(ex(V))$.

On occasion, it will be convenient to write $U \sim (V_1 + V_2 + \cdots + V_N) = U \sim V_1 \sim V_2 \sim \cdots \sim V_N$, a notation which by (v) is unambiguous.

It should be emphasized that the P-difference is not an additive inverse; i.e., in general, $(U \sim V) + V \neq U$. The equality may fail even if U and V are compact and convex. Consider the example: $U = \{u\colon |u|_\infty \leq 1\}$, $V = \{v\colon |v|_2 \leq \frac{1}{2}\} \subset \mathbb{R}^2$. It follows that $U \sim V = \{z\colon |z|_\infty \leq \frac{1}{2}\}$ and $(U \sim V) + V$ is the unit square with "rounded" corners. Thus $(U \sim V) + V \neq U$. It turns out, however, that if U and V are convex and compact and there exists a convex set W such that $U = V + W$, then $W = U \sim V$. There is an obvious special case of this result. Suppose Z is compact and convex and $0 \leq \alpha_V \leq \alpha_U$. Then, $\alpha_U Z \sim \alpha_V Z = (\alpha_U - \alpha_V)Z$.

Remark 2.1 Using this last result it is possible to obtain set inclusions which bound $U \sim V$. Suppose U is compact and convex and $\alpha_1 U \subset V \subset \alpha_2 U$ where $0 \leq \alpha_1 \leq \alpha_2 \leq 1$. Then, $(1 - \alpha_2)U = U \sim \alpha_2 U \subset U \sim V \subset U \sim \alpha_1 U = (1 - \alpha_1)U$. In the above example, $\alpha_1 = (2\sqrt{2})^{-1}$, $\alpha_2 = (2)^{-1}$ and the resulting inclusions form a reasonably tight bounding pair. There is an obvious, general application. If α_1 and α_2 are both small, then $U \sim V \approx U$ and the inclusion describes precisely the nature of the approximation. Similarly, under the assumption that U is compact and convex, $\alpha_1 V \subset U \subset \alpha_2 V$, $1 \leq \alpha_1 \leq \alpha_2$, implies $(\alpha_1 - 1)V \subset U \sim V \subset (\alpha_2 - 1)V$.

It is also possible to characterize $U \sim V$ in terms of the support functions of U and V [39].

THEOREM 2.2 *Suppose U is compact and convex and $U \sim V \neq \emptyset$. Then*: (i) *$h_U(\eta)$ and $h_V(\eta)$ are defined for all $\eta \in \mathbb{R}^n$*; (ii)

$$U \sim V = \{z \in \mathbb{R}^n\colon \eta^{\mathrm{T}} z \leq h_U(\eta) - h_V(\eta)\ \forall \eta \in \mathbb{R}^n\}. \tag{2.1}$$

Proof Since $U \sim V \neq \emptyset$ there exists $z \in \mathbb{R}^n$ such that $\{z\} + V \subset U$. Thus, both U and V are compact and their support functions are

defined for all $\eta \in \mathbb{R}^n$. Now consider (ii). Suppose $z \in U \sim V$. Since $\{z\} + V \subset U$, $\eta^{\mathrm{T}} z + h_V(\eta) \leq h_U(\eta)$ for all $\eta \in \mathbb{R}^n$. Now suppose $z \in \mathbb{R}^n$ is such that $\eta^{\mathrm{T}} z + h_V(\eta) \leq h_U(\eta)$ for all $\eta \in \mathbb{R}^n$. Then, $h_{\{z\}} + V(\eta) = h_{\{z\}+coclV}(\eta) \leq h_U(\eta)$ for all $\eta \in \mathbb{R}^n$. For compact convex sets $U_1, U_2 \subset \mathbb{R}^n$ it is known [37] that $h_{U_1}(\eta) \leq h_{U_2}(\eta)$ for all $\eta \in \mathbb{R}^n$ implies $U_1 \subset U_2$. Thus, $\{z\} + V \subset \{z\} + co(clV) \subset U$ and the proof of (ii) is complete.

The characterization in (2.1) represents $U \sim V$ as the intersection of an infinite number of half spaces. It is tempting to conclude that $h_{U \sim V} = h_U - h_V$, but this conjecture is not true. Consider the example which precedes Remark 2.1. Clearly, $h_{U \sim V}(\eta) = \frac{1}{2}|\eta| \neq h_U(\eta) - h_V(\eta) = |\eta|_1 - \frac{1}{2}|\eta|_2$. It does follow from (2.1) that

$$h_{U \sim V}(\eta) \leq h_U(\eta) - h_V(\eta). \tag{2.2}$$

We now turn to characterizations of $U \sim V$ that are concrete in the sense that it is possible to test computationally whether or not a point z belongs to $U \sim V$. Here Theorem 2.1 provides some assistance. Results (iv) and (viii) allow U and V to be mapped into potentially more useful forms. Specifically, if $G \in \mathbb{R}^{n \times m}$ is non-singular, $\bar{U} = G(U - \{\bar{u}\})$ and $\bar{V} = G(V - \{\bar{v}\})$ give $U \sim V = G^{-1}(\bar{U} \sim \bar{V}) + \{\bar{u} - \bar{u}\}$. If V is a polytope characterized as in result (xiii) and it is possible to test for $u \in U$, then $z \in U \sim V$ if and only if $z + v_i \in U$ for $i = 1, \ldots, N$. When U is a polyhedron, $U \sim V$ is a polyhedron. Moreover, when U is expressed as an intersection of half spaces, $U \sim V$ is easily determined from the support function of V. This result was first mentioned in the control literature [4,23] in 1971 where it is attributed to [27]. Remarkably, the result does not seem to appear in earlier mathematical literature. Closely related results concerning supporting half spaces do appear, so the absence of the specific result must be attributed to a lack of interest in constructive methods.

THEOREM 2.3 *Suppose U is a polyhedron,*

$$U = \{z \in \mathbb{R}^n \colon s_i^{\mathrm{T}} z \leq r_i, \quad i = 1, \ldots, N\}, \tag{2.3}$$

where $s_i \in \mathbb{R}^n$, $s_i \neq 0$, and $r_i \in \mathbb{R}, i = 1, \ldots, N$. Assume $h_V(s_i)$ is defined

for $i=1, \ldots, N$. *Then,*

$$U \sim V = \{z \in \mathbb{R}^n \colon s_i^{\mathrm{T}} z \leq r_i - h_V(s_i), \quad i = 1, \ldots, N\}. \tag{2.4}$$

Proof The result (2.4) is valid if $N=1$ since then by result (i) of Theorem 2.1, $U \sim V = \bigcap_{v \in V}\{z \colon s_1^{\mathrm{T}}(z+v) \leq r_1\} = \{z \colon s_1^{\mathrm{T}} z + h_v(s_1) \leq r_1\}$. Recursive application of result (vi) in Theorem 2.1 proves (2.4) for $N > 1$.

Remark 2.2 If $h_V(s_i)$ is not defined ($s_i^{\mathrm{T}} v$ is unbounded from above on V) for some $i=1, \ldots, N$, then $U \sim V$ is empty. If $h_V(s_i)$ is defined for $i=1, \ldots, N$ it is still possible that $U \sim V = \emptyset$. In this case emptyness can be checked by the usual linear programming test for feasibility: maximize α over those $(z, \alpha) \in \mathbb{R}^{n+1}$ which satisfy $s_i^{\mathrm{T}} z + \alpha \leq r_i - h_V(s_i)$, $i=1, \ldots, N$; $U \sim V \neq \emptyset$ if and only if $\max \alpha \geq 0$.

Remark 2.3 Suppose (2.3) is a nonredundant characterization of U, i.e., the removal of any one of the N inequalities changes U. It is still possible that (2.4) is a redundant characterization of $U \sim V$. Redundant inequalities can be sequentially eliminated by applying linear programming. For example, if $\max s_1^{\mathrm{T}} z < r_1 - h_V(s_1)$ for all z such that $s_i^{\mathrm{T}} z < r_i - h_V(s_i)$, $i=2, \ldots, N$, the first inequality may be removed.

Remark 2.4 It is not assumed that either U or V is bounded. Moreover, (2.4) can be applied numerically to a wide class of V. It is only necessary to have a procedure for computing the $h_V(s_i)$; see, for instance, the next to the last paragraph in Section 1.

The simplicity of ellipsoidal sets makes them particularly attractive in applications. Suppose $U = \{u \colon u^{\mathrm{T}} P^{-1} u \leq 1\}$, $P = P^{\mathrm{T}} \geq 0$. If V is the polytope, $V = co\{v_i, \ i=1, \ldots, N\}$ the characterization of $U \sim V$ is immediate: $z \in U \sim V$ if and only if $(z - v_i)^{\mathrm{T}} P^{-1} (z - v_i) \leq 1$, $i=1, \ldots, N$. Not surprisingly, $U \sim V$ is neither smooth nor an ellipsoid. There are algorithmic methods, see, e.g. [13], for constructing the ellipsoid of maximal volume which is contained in an intersection of ellipsoids. While such an internal approximation of $U \sim V$ has the advantage of simplicity, it may fail to capture much of the total volume of $U \sim V$.

If V is an image of an ellipsoid, $V = BW \subset \mathbb{R}^n$, $W = \{w\colon w^{\mathrm{T}} R^{-1} w \leq 1\} \subset \mathbb{R}^m$, $R = R^{\mathrm{T}} \geq 0$, things remain complex; $U \sim V$ is neither ellipsoidal nor smooth and it defies an explicit characterization. This complexity motivated early control researchers [4,5,23] to exploit inner ellipsoidal bounds for $U \sim V$. The following theorem characterizes a family of such bounds.

THEOREM 2.4 *Suppose U and V are characterized as above. Let $G \in \mathbb{R}^{n \times m}$ be a nonsingular matrix that simultaneously diagonalizes P and BRB^{T}: $GPG^{\mathrm{T}} = I_n$, $GBRB^{\mathrm{T}}G^{\mathrm{T}} = \Lambda = diag[\lambda_i]$ where $\lambda_1 \geq \lambda_2 \geq \cdots \geq \lambda_l > 0$ and if $l < n$, $\lambda_{l+1} = \cdots = \lambda_n = 0$. If $\lambda_1 > 1$, then $U \sim V = \emptyset$. Assume $\lambda_1 < 1$ and $0 < \gamma < 1 - \lambda_1$. If $Q \subset \mathbb{R}^{n \times n}$ satisfies*

$$0 < Q^{\mathrm{T}} = Q \leq \gamma(P - \frac{1}{1-\gamma} BRB^{\mathrm{T}}) = \Phi(\gamma), \tag{2.5}$$

then

$$Z = \{z\colon z^{\mathrm{T}} Q^{-1} z \leq 1\} \subset \{z\colon z^{\mathrm{T}} \Phi^{-1}(\gamma) z \leq 1\} = Z^*(\gamma) \subset U \sim V. \tag{2.6}$$

Nothing is gained by considering values of γ which do not satisfy:

$$1 - \sqrt{\lambda_1} \leq \gamma \leq 1 - \sqrt{\lambda_n}. \tag{2.7}$$

Specifically, $Z^*(\gamma) \subset Z^*(1 - \sqrt{\lambda_1})$ for $0 < \gamma < 1 - \sqrt{\lambda_1}$ and, if $1 - \sqrt{\lambda_n} < 1 - \lambda_1$, $Z^*(\gamma) \subset Z^*(1 - \sqrt{\lambda_n})$ for $1 - \sqrt{\lambda_n} < \gamma < 1 - \lambda_1$.

Proof The inclusion $Z \subset U \sim V$ is equivalent to $GZ \subset G(U \sim V) = GU \sim GV$. Since $GU \sim GV$ is compact and convex it follows from (2.2) that $Z \subset U \sim V$ if $h_{GZ}(\eta) \leq h_{GU \sim GV}(\eta) \leq h_{GU}(\eta) - h_{GV}(\eta)$ for all $\eta \in \mathbb{R}^n$, or, equivalently, $\sqrt{\eta^{\mathrm{T}} GQG^{\mathrm{T}} \eta} \leq \sqrt{\eta^{\mathrm{T}} \eta} - \sqrt{\eta^{\mathrm{T}} \Lambda \eta}$ for all $\eta \in \mathbb{R}^n$. Suppose $\lambda_1 > 0$ and $GU \sim GV \neq \emptyset$. Then there exists η such that $h_{GU \sim GV}(\eta) < 0$, which implies $0 \notin GU \sim GV$. This contradicts (xi) of Theorem 2.1. Let $\nu_1, \nu_2, \nu_3 > 0$. Then it is easy to show that a sufficient condition for $\sqrt{\nu_1} \leq \sqrt{\nu_2} - \sqrt{\nu_3}$ is: $\nu_1 \leq \gamma(\nu_2 - 1/(1-\gamma)\nu_3)$, where γ satisfies $0 < \gamma < 1$. Thus, the desired inclusion holds if $GQG^{\mathrm{T}} \leq \Theta(\gamma) = diag[\theta_i(\gamma)]$, where $\theta_i(\gamma) = \gamma(1 - \lambda_i/(1-\gamma))$. Since

$G^{-1}\Theta(\gamma)G^{-\mathrm{T}} = \Phi(\gamma)$ this condition is equivalent to (2.5). Thus, $h_Z(\eta) < h_{Z^*(\gamma)}(\eta)$ for all $\eta \in \mathbb{R}^n$ and (2.6) is proved. The $\theta_i(\gamma)$ have a simple geometric interpretation; they are the half lengths of the principal axes of the ellipsoid $\{x\colon x^{\mathrm{T}}\Theta^{-1}(\gamma)x \leq 1\}$. Clearly, $\theta_i(\gamma) > 0$ for $0 < \gamma < 1 - \lambda_i$ and $\theta_i(\gamma) \leq 0$ for $1 - \lambda_i \leq \gamma < 1$. Hence, $\Theta(\gamma) > 0$ requires $\gamma < 1 - \lambda_1$. The functions $\theta_i(\gamma)$ are concave and for $0 < \gamma < 1$ satisfy the conditions: $\theta_i(\gamma) \leq \Theta_{i+1}(\gamma)$, $\max \theta_i(\gamma) = \theta_i(1 - \sqrt{\lambda_i}) = (1 - \sqrt{\lambda_i})^2$. It is easy to deduce from these properties and $Z^*(\gamma) = \{z\colon z^{\mathrm{T}}G^{\mathrm{T}}\Theta^{-1}(\gamma)Gz \leq 1\}$ that the restriction (2.7) holds.

Remark 2.5 The theorem is stronger than the one in [23] in that it adds the restriction (2.7) and does not require that V is an ellipsoid with a nonempty interior. Sometimes [4,5], (2.5) is stated with no restrictions on γ except $0 < \gamma < 1$.

Remark 2.6 The equality $Z = Z^*(\gamma)$ occurs if and only if $Q = \Phi(\gamma)$. The choice of γ affects the lengths of the principal axes of the ellipsoid $Z^*(\gamma)$ but not their direction. This property may help to determine the value of γ so that (2.6) best meets the needs of a given criterion of inner approximation.

Remark 2.7 There is no guarantee that any one of the inner ellipsoidal bounds provided by $\gamma \in [1 - \sqrt{\lambda_1}, \min\{1 - \sqrt{\lambda_n}, 1 - \lambda_1\}]$ will be tight. The complexity of $U \sim V$ may simply not admit a good ellipsoidal approximation.

We conclude this section by considering approximations of U and V and their role in computing approximations to $U \sim V$. To show that arbitrarily accurate approximations can be obtained by sufficiently accurate approximations of U and V, it is necessary to show that the P-difference is continuous in U and V. Recall that distance between a pair of compact sets $X, Y \subset \mathbb{R}^n$ is measured by the Hausdorff metric

$$\rho(X, Y) = \max\{\epsilon_1, \epsilon_2\}, \qquad \epsilon_1 = \inf\{\epsilon\colon X \subset Y + \epsilon\mathcal{B}^n\},$$
$$\epsilon_2 = \inf\{\epsilon\colon Y \subset X + \epsilon\mathcal{B}^n\}. \tag{2.8}$$

A sequence of compact sets X_i converges to X when $\rho(X_i, X) \to 0$.

THEOREM 2.5 *Suppose $U \subset \mathbb{R}^n$, $U^k \subset \mathbb{R}^n$, and $V \subset \mathbb{R}^n$, $V^k \subset \mathbb{R}^n$, $k \in \mathbf{Z}^+$, are nonempty compact sets satisfying: $U \subset U^{k+1} \subset U^k$, $U^k \to U$*

as $k \to \infty$; $V^k \subset V^{k+1} \subset V$, $V^k \to V$ *as* $k \to \infty$. *If* $U \sim V$ *is nonempty, then* $U^k \sim V^k \to U \sim V$ *as* $k \to \infty$.

Proof If $z \in U \sim V$, then $z + V^k \subset U^k$ for all $k \in \mathbf{Z}^+$. Hence, $z \in \bigcap_{k=1}^{\infty}(U^k \sim V^k)$. If $z \in U^k \sim V^k$ for all k but $z \notin U \sim V$ then there exists $v \in V$ such that $z + v \notin U$. Thus, there exists $\epsilon > 0$ and $v \in V$ such that $(z + v + \epsilon \mathcal{B}^n) \bigcap U = \emptyset$. Hence, $(z + v + \frac{\epsilon}{4}\mathcal{B}^n) \bigcap (U + \frac{\epsilon}{4}\mathcal{B}^n) \neq \emptyset$. Let $k \in \mathbf{Z}^+$ be sufficiently large so that $U^k \subset U + \frac{\epsilon}{4}\mathcal{B}^n$ and there exists $v_k \in V^k$ such that $v_k \in v + \frac{\epsilon}{4}\mathcal{B}^n$. But then $z + v_k \notin U^k$, which contradicts $z \in U^k \sim V^k$. To complete the proof observe that $U^k \sim V^k$ is a decreasing sequence of compact sets. Hence, $\bigcap_{k=1}^{\infty}(U^k \sim V^k) = \lim_{k\to\infty} U^k \sim V^k$ (see [39], p. 48).

It is well known that compact convex sets may be approximated to an arbitrary degree of accuracy by compact convex polyhedra [39] and in certain situations constructive procedures are available. Thus, Theorem 2.5 can be applied to polyhedral approximations of $U \sim V$ when U is compact and convex and V has approximations which permit the evaluation of its support function. While Theorem 2.5 shows that arbitrarily accurate polyhedral approximations of $U \sim V$ are possible, it does not provide quantitative measures for the accuracy of such approximations.

If it is possible to evaluate the support functions of U and V, quantitative measures can be determined. Since the support function of V is known it is only necessary to approximate U. Let $U^- = \{u\colon s_i^{\mathrm{T}} u \leq r_i, i = 1, \ldots, N\} \subset U$ be an inner polyhedral approximation of U. Then $U \subset \{u\colon s_i^{\mathrm{T}} u \leq h_U(s_i), i = 1, \ldots, N\} = U^+$. The accuracy of the approximation of U increases as N increases and the differences $h_U(s_i) - r_i \geq 0$ become small. By (2.2) and the definition of P-difference, $U^- \sim V = \{u\colon s_i^{\mathrm{T}} u \leq r_i - h_V(s_i), i = 1, \ldots, N\} \subset U \sim V \subset U^+ \sim V = \{u\colon s_i^{\mathrm{T}} \leq h_U(s_i) - h_V(s_i), i = 1, \ldots, N\}$. From these inclusions it can be seen that $U^- \sim V \subset U \sim V \subset \alpha(U^- \sim V)$, where $\alpha = \max\{(h_U(s_i) - h_V(s_i))/(r_i - h_V(s_i))\colon i = 1, \ldots, N\}$. Clearly, $\alpha - 1 > 0$ becomes small as $h_U(s_i) \to r_i$, $i = 1, \ldots, N$.

3 TESTS FOR d-INVARIANCE

Much of the literature on invariant sets concerns tests for d-invariance, i.e., given a specified set $X \subset \mathbb{R}^n$ determine necessary and/or sufficient

conditions for $AX + BW \subset X$. In this section we review many of these results and show how they may be obtained almost immediately from the properties of the P-difference. It is assumed that $0 \in X$. This simplifies notational complexity and is consistent with the assumption $0 \in W$.

Suppose X is a polyhedron characterized by an intersection of half spaces. Since $0 \in X$, it can be written as $X = \{x\colon s_i^{\mathrm{T}} x \leq 1, i = 1, \ldots, N\}$. Invariance is equivalent to $AX \subset X \sim BW$. Thus, by Theorem 2.3, d-invariance of X is equivalent to

$$AX \subset Z = \{z\colon s_i^{\mathrm{T}} z \leq 1 - h_W(B^{\mathrm{T}} s_i), \quad i = 1, \ldots, N\}. \tag{3.1}$$

Since $0 \in AX$, a necessary condition for d-invariance is that $h_W(B^{\mathrm{T}} s_i) \leq 1$, $i = 1, \ldots, N$. There is no special requirement on W other than the indicated evaluations of its support function can be made. If, in addition, X is compact and its vertices $\{x_j\colon j = 1, \ldots, M\}$ are known, (3.1) is satisfied if and only if $Ax_j \in Z$, $j = 1, \ldots, M$. This is the necessary and sufficient condition for d-invariance of Blanchini [9,11]. While it can be easily applied numerically, it is inconvenient in applications because the vertices are generally not known and it is difficult to compute them from the half space characterization. Alternatively, (3.1) can be written as

$$s_i^{\mathrm{T}} Ax \leq 1 - h_W(B^{\mathrm{T}} s_i) \text{ for all } x \in X, \quad i = 1, \ldots, N. \tag{3.2}$$

These inequalities can be tested numerically by solving N linear programming problems: maximize $s_i^{\mathrm{T}} Ax$ on X. Multiplier necessary conditions for these linear programs form still another set of necessary and sufficient conditions for d-invariance [10,11]. However, the linear programming approach to (3.2) is a much simpler numerical test for d-invariance.

Invariance is also equivalent to $BW \subset X \sim AX$. This gives $BW \subset \{x\colon s_i^{\mathrm{T}} x \leq 1 - h_X(A^{\mathrm{T}} s_i), i = 1, \ldots, N\}$, which in turn can be written as

$$W \subset W^* = \{w\colon s_i^{\mathrm{T}} Bw \leq 1 - h_X(A^{\mathrm{T}} s_i), \quad i = 1, \ldots, N\}. \tag{3.3}$$

This is the necessary and sufficient condition for d-invariance obtained by De Santis [17]. It provides additional insight because W^*

is the largest disturbance set for which X is d-invariant. Since W^* is a polyhedron, a condition equivalent to (3.3) is

$$h_W(B^{\mathrm{T}}s_i) \leq 1 - h_X(A^{\mathrm{T}}s_i), \quad i = 1, \ldots, N. \tag{3.4}$$

It is nothing more than a restatement of the linear programming approach to (3.2).

Now suppose X is the ellipsoid $X = \{x\colon x^{\mathrm{T}}P^{-1}x \leq 1\}$, $P = P^{\mathrm{T}} > 0$. The condition $AX \subset X \sim BW$ is difficult to apply because $X \sim BW$ does not have simple numerical characterization. If W is the ellipsoid $W = \{w\colon w^{\mathrm{T}}R^{-1}w \leq 1\}$, $R = R^{\mathrm{T}} > 0$, it is possible to apply Theorem 2.4 and obtain a *sufficient* condition for d-invariance: $AX \subset \{z\colon z^{\mathrm{T}}\Phi^{-1}(\gamma)z \leq 1\}$. Evaluating the support functions on both sides of this inclusion yields an equivalent condition: $APA^{\mathrm{T}} \leq \Phi(\gamma)$. Let $\lambda_i, i = 1, \ldots, n$, be determined by the simultaneous diagonalizations, $GPG^{\mathrm{T}} = I_n$ and $GBRB^{\mathrm{T}}G^{\mathrm{T}} = diag[\lambda_i]$, and $\lambda_i \geq \lambda_{i+1}$. If $\lambda_1 > 1$, $X \sim BW = \emptyset$ and X is not d-invariant. Assume $\lambda_1 < 1$. If for some $\gamma \in \Pi$,

$$P - \gamma^{-1}APA^{\mathrm{T}} - (1-\gamma)^{-1}BRB^{\mathrm{T}} = S \geq 0, \tag{3.5}$$

where $\Pi = \{\gamma\colon 0 < \gamma < 1 - \lambda_1, 1 - \sqrt{\lambda_1} \leq \gamma \leq 1 - \sqrt{\lambda_n}\}$, then X is d-invariant. A similar development, starting with $BW \subset X \sim AX$, also gives (3.5); however, $\gamma \in \bar{\Pi}$ where $\bar{\Pi} = \{\gamma\colon \bar{\lambda}_1 < \gamma < 1, \sqrt{\bar{\lambda}_n} \leq \gamma \leq \sqrt{\bar{\lambda}_1}\}$ and the $\bar{\lambda}_i$ are determined by the simultaneous diagonalizations, $\bar{G}P\bar{G}^T = I_n$ and $\bar{G}APA^T\bar{G}^T = diag[\bar{\lambda}_i]$ and $\bar{\lambda}_i \geq \bar{\lambda}_{i+1}$. If $\bar{\lambda}_1 > 1$, $X \sim AX = \emptyset$. Thus, the two approaches differ only in the intervals of γ over which $S \geq 0$ needs to be tested. In fact, γ needs only be considered in $\Pi \bigcap \bar{\Pi}$. It is easy to confirm that $\bar{\lambda}_1 < \gamma < 1$ implies $P - \gamma^{-1}APA^{\mathrm{T}} > 0$ and $0 < \gamma < \bar{\lambda}_1$ implies $P - \gamma^{-1}APA^{\mathrm{T}} \leq 0$. These are conditions which might be expected from the theory of the discrete-time Lyapunov equation [38] with $\gamma^{-1/2}A$ playing the role of the usual asymptotically stable matrix. Blanchini [11] states (3.5) as a sufficient condition for d-invariance with $\gamma \in (0,1)$ and $S = 0$. This is a much weaker sufficient condition with respect to the choices of both γ and S.

Necessary and sufficient conditions for the d-invariance of the ellipsoid X can also be derived. Unlike the sufficiency results in the

prior literature, they take the form of nonlinear programming problems. Obviously, the definition of invariance is equivalent to

$$\max_{x \in X, w \in W} F(x, w) = F^* \leq 1, \tag{3.6}$$

where $F(x, w) = (Ax + Bw)^{\mathrm{T}} P^{-1} (Ax + Bw)$. Since W is compact, the solution of the optimization problem exists and must satisfy appropriate necessary conditions. For example, if $W = \{w\colon w^{\mathrm{T}} R^{-1} w \leq 1\}$, $R = R^{\mathrm{T}} > 0$, the Karush–Kuhn–Tucker conditions are valid necessary conditions. There are practical difficulties in applying them. Because the optimization problem is nonconvex, they are complex and have multiple solutions, all of which must be evaluated. If $W = co\{w_i\colon i = 1, \ldots, N\}$, (3.6) is replaced by N conditions:

$$\max_{x \in X} F_i(x) = F_i^* \leq 1, \quad i = 1, \ldots, N, \tag{3.7}$$

where $F_i(x) = (Ax + Bw_i)^{\mathrm{T}} P^{-1} (Ax + Bw_i)$. Each of these optimization problems is much simpler than (3.6). By introducing a change of variables the corresponding necessary conditions may be reduced to the problem of finding roots of an equation $\phi(\lambda) = 0$ where $\phi\colon \mathbb{R} \to \mathbb{R}$ is given by a simple formula. While there are multiple roots, they appear pairwise in known subintervals so that they can be computed quickly by Newton's method. Details will appear elsewhere.

4 TWO IMPORTANT d-INVARIANT SETS

Suppose A is asymptotically stable. Then, since W is compact, it is intuitively obvious that there exist bounded d-invariant sets. We substantiate this statement in two ways: by describing specific procedures for constructing ellipsoidal families of such sets and by observing the connections between reachable sets and "minimal" d-invariant sets.

Consider first the situation where W is the ellipsoid described in the preceding section. It has been noted that (3.5) is similar in form to a discrete-time Lyapunov equation. Since A is asymptotically stable it has a spectral radius $\mu < 1$. Clearly, $\mu^2 < \gamma$ if and only if $\gamma^{-1/2} A$ is asymptotically stable. Thus [38], for all $\mu^2 < \gamma < 1$ and $S > 0$, (3.5) has

an unique solution, $P > 0$, which is easily computed. The corresponding ellipsoidal sets X form a d-invariant family parametrized by $\gamma \in (\mu^2, 1)$ and S. While the characterization of the parametrization is not simple, it is obvious that for sufficiently large S, X covers any bounded subset in $\mathbb{R}^n$. Conversely, for $S > 0$ small, the sets X are relatively small. In fact, if the pair (A, B) is controllable it is possible to take $S = 0$. Then, (3.5) still has a solution (see [38], p. 473) $P > 0$, parametrized by $\mu^2 \leq \gamma < 1$, which describes a family of "smallest" elliposidal sets X.

The preceding constructive procedure applies also to general disturbance sets. Obtain an ellipsoidal bound for W: say $W \subset \{w\colon w^{\mathrm{T}} R^{-1} w \leq 1\}$, $R > 0$. Then, by the definition of d-invariance, ellipsoidal sets X generated by (3.5) are d-invariant.

Consider the action of the disturbance input on system (1.1). The set of all states reachable at t, starting from $x(0) = 0$, is

$$F_t = \{x(t)\colon\ x(t) = \sum_{k=0}^{t-1} A^{(t-k-1)} B w(k),\ w \in \mathcal{W}\}, \quad t \geq 1. \tag{4.1}$$

In set-theoretic notation,

$$\begin{aligned} F_0 &= \{0\}, \\ F_t &= \sum_{k=0}^{t-1} A^k B W, \quad t \geq 1, \end{aligned} \tag{4.2}$$

and

$$F_{t+1} = A F_t + B W, \quad t \in \mathrm{Z}^+. \tag{4.3}$$

Obviously,

$$0 \in F_t \subset F_{t+1} \quad \forall t \in \mathrm{Z}^+. \tag{4.4}$$

The sequence of sets $\{F_t\colon t \in \mathrm{Z}^+\}$ has well-known properties which are summarized in the following theorem. For completeness we include a proof.

THEOREM 4.1 *Assume A is asymptotically stable. Then there exists a compact set, $F \subset \mathbb{R}^n$, with the following properties:* (i)

$$0 \in F_t \subset F \quad \forall t \in \mathrm{Z}^+, \tag{4.5}$$

(ii) $F_t \to F$, *i.e., for every* $\epsilon > 0$ *there exists* $t \in \mathbb{Z}^+$ *such that* $F \subset F_t + \epsilon \mathcal{B}^n$.
(iii) F *is d-invariant.*

Proof Since $0 \in W$ and W is compact, $0 \in F_t$ and F_t is compact. Recall that with the Hausdorff metric ρ the family of compact sets in $\mathbb{R}^n$ forms a complete metric space ([2], p. 164). Furthermore, the compactness of W and the asymptotic stability of A imply the existence of $\mu > 0$ and $0 < \lambda < 1$ such that for all $t \in \mathbb{Z}^+$, $A^t BW \subset \mu\lambda^t \mathcal{B}^n$. This and $F_{t+1} = F_t + A^t BW$ imply $\rho(F_{t+1}, F_t) \leq \mu\lambda^t$. Hence, $\{F_t\colon t \in \mathbb{Z}^+\}$ is Cauchy and F_t, $t \to \infty$, has a limit F. This proves (i) and (ii). Letting $t \to \infty$ in (4.3) proves $F = AF + BW$ which shows that F is d-invariant.

Remark 4.1 Results (i) and (ii), together with the asymptotic stability of A, imply that F is the *limit set* for all the trajectories of (1.1). In particular, F is the smallest closed set in $\mathbb{R}^n$ that has the following property: given any $\xi > 0$ and any $\epsilon > 0$ there exists $\hat{t} \in Z^+$ such that for all $x(0) \in \xi \mathcal{B}^n$ and for all $w \in \hat{W}$ it follows that $x(t) \in F + \epsilon \mathcal{B}^n$ for all $t \geq \hat{t}$.

Remark 4.2 Since F is a Minkowski sum of infinitely many terms, it is generally impossible to obtain an explicit characterization of it. There is an exception. Suppose there exist $k \in \mathbb{Z}^+$ and $0 \leq \alpha < 1$ such that $A^k B = \alpha B$. Then it is easy to confirm that $F = (1-\alpha)^{-1}$ $(BW + ABW + \cdots + A^k BW)$.

COROLLARY 4.2 *Suppose A is asymptotically stable. Then, over the class of closed d-invariant sets, F is minimal, i.e., if X is any closed d-invariant set, then $F \subset X$.*

Proof Since X is d-invariant and $0 \in W$, $x(0) \in X$ implies $A^t x(0) \in X$ for all $t \in \mathbb{Z}^+$. Thus, $A^t x(0) \to 0$ and X closed imply $0 \in X$. By the d-invariance of X, $x(0) = 0$ implies $x(t) \in X$ for all $t \in \mathbb{Z}^+$ and $w \in \mathcal{W}$. Hence, (4.1) shows $F_t \subset X$, for all $t \in \mathbb{Z}^+$. Minimality follows immediately from Theorem 4.1 and closure of X.

A simple example illustrates the preceding results.

Example 4.1 Let $n = 2$, $m = 1$, $p = 2$, $W = [-0.231, 0.231]$ and

$$A = \begin{bmatrix} 0.5 & 0 \\ 1 & 1 \end{bmatrix}, \qquad B = \begin{bmatrix} 1 \\ 1 \end{bmatrix}.$$

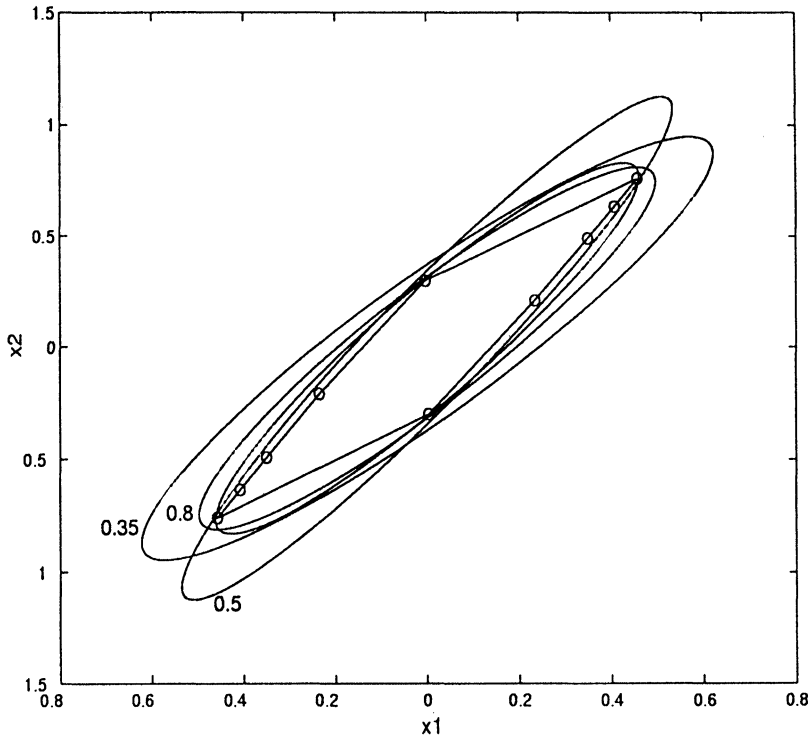

FIGURE 1 Sets $X_{0.35}$, $X_{0.5}$, $X_{0.65}$, $X_{0.8}$ and F_5 in Example 4.1. The vertices of the set F_5 are designated by the small circles.

Figure 1 displays the ellipsoidal sets, X_γ, generated by (3.5) for five values of $\gamma \in [\mu^2, 1) = [0.25, 1]$ with $S = 0$. The objective is to obtain simply defined bounding sets for the very complex set F. The intersection of the five ellipsoids, $\bar{X}$, is also d-invariant, so $F \subset \bar{X}$. Note $\bar{X} = X_{0.5} \bigcap X_{0.65} \bigcap X_{0.8}$ so that $X_{0.35}$ adds nothing. In fact, $\bar{X}$ is quite reasonably approximated by $X_{0.65}$ alone. Clearly, F is trapped between upper and lower bounds $\bar{X}$ and F_5.

5 THE MAXIMAL d-INVARIANT SET, O_∞

We now return to the characterization of d-invariant sets which are maximal under output constraints. The characterization of O_t given

by (1.4) and (1.7) can be rewritten in terms of P-differences. Let

$$Y_0 = Y \sim DW, \qquad Y_t = Y \sim DW \sim \cdots \sim CA^{t-1}BW, \quad t \geq 1. \tag{5.1}$$

Then,

$$O_t = \{x(0) \in \mathbb{R}^n\colon\ CA^{\tau}x(0) \in Y_{\tau}, \quad \tau = 0, \ldots, t\}. \tag{5.2}$$

These expressions lead to the recursions:

$$Y_{t+1} = Y_t \sim CA^tBW, \qquad Y_0 = Y \sim DW, \tag{5.3}$$

$$\begin{aligned} O_{t+1} &= O_t \bigcap \{\phi \in \mathbb{R}^n\colon\ CA^{t+1}\phi \in Y_{t+1}\}, \\ O_0 &= \Gamma = \{\phi\colon\ C\phi \in Y_0\}. \end{aligned} \tag{5.4}$$

From (1.3),

$$O_\infty = \bigcap_{t \in \mathbb{Z}^+} O_t. \tag{5.5}$$

Key properties of these sets are collected together in the following two theorems.

THEOREM 5.1 *Suppose $O_t \neq \emptyset$. Then $Y_t \neq \emptyset$ and the following conclusions hold:* (i) $Y_{t+1} \subset Y_t$, $O_{t+1} \subset O_t$. (ii) *Y_t is compact.* (iii) *If $t \geq n-1$, O_t is compact.* (iv) *If Y is convex, Y_t and O_t are convex.* (v) *If Y and W are symmetric, Y_t and O_t are symmetric.* (vi) *If Y and W are symmetric and convex, $0 \in Y_t$ and $0 \in O_t$.*

Proof The first part of (i) follows from $0 \in W$, (5.3) and result (iii) of Theorem 2.1. The second part is obvious from (5.4). Results (ii) and (iv)–(vi) are obvious consequences of (A1), (5.1), (5.2) and Theorem 2.1. Let $H = [C^{\mathrm{T}}(CA)^{\mathrm{T}} \cdots (CA^{n-1})^{\mathrm{T}}]^{\mathrm{T}} \in \mathbb{R}^{np \times n}$; by (A2), H has rank n. Thus, $H^+ = (H^{\mathrm{T}}H)^{-1}H^{\mathrm{T}} \in \mathbb{R}^{n \times np}$ exists. It follows from (5.2) that $O_{n-1} = H^+(Y_0 \times Y_1 \times \cdots \times Y_{n-1})$. This, (ii) and $O_t \subset O_{n-1}$, $t > n-1$, imply (iii).

THEOREM 5.2 *Suppose $O_\infty \neq \emptyset$. Then:* (i) $AO_\infty \subset O_\infty$ (ii) *O_∞ is compact and $O_t \to O_\infty$* (iii) *If Y is convex, then O_∞ is convex.* (iv) *If*

W, Y are symmetric, then O_∞ is symmetric. (v) *If W, Y are symmetric and convex, then* $0 \in O_\infty$. (vi) *If A is asymptotically stable, then* $0 \in O_\infty$. (vii) For all $\alpha \in \mathbb{R}$, $O_\infty(A, B, C, D, \alpha W, \alpha Y) = \alpha O_\infty(A, B, C, D, W, Y)$. (viii) *Suppose $T \in \mathbb{R}^{n \times n}$ is nonsingular. Then,* $O_\infty(A, B, C, D, W, Y) = TO_\infty(T^{-1}AT, T^{-1}B, CT, D, W, Y)$.

Proof Result (i) follows from $0 \in W$. Results (iii)–(v) are direct consequences of Theorem 5.1. Theorem 4.1 and Corollary 4.2 imply (vi). Statements (vii) and (viii) are straightforward algebraic consequences of (1.3). and (1.4). Result (ii) follows from (5.5) and the fact that O_t, $t \in \mathbb{Z}^+$, $t \geq n-1$, is a nonincreasing sequence of compact sets (see [39], p. 48).

Remark 5.1 Suppose Y is convex. Then by (5.3), part (iv) of Theorem 5.1 and part (xii) of Theorem 2.1, it follows that there is no change in Y_t and O_t if W is replaced by coW. Thus, O_∞ is unchanged if W is changed to coW. Similarly, by part (xiv) of Theorem 2.1, O_∞ is unchanged if W is replaced by exW. If exW contains only a few points this result, together with part (i) of Theorem 2.1, may be computationally advantageous in (5.3).

Remark 5.2 Suppose A is asymptotically stable. Then by Corollary 4.2, $O_\infty \neq \emptyset$ implies $F \subset O_\infty \subset \Gamma$. Conversely, $F \subset \Gamma$ implies the existence of at least one d-invariant set in Γ. Thus, $O_\infty \neq \emptyset$ if and only if $F \subset \Gamma$.

Example 5.1 Let $n = p = 2$, $m = 1$, $W = [-1, +1]$, $Y = \delta[-1, +1]^2$ and

$$A = \begin{bmatrix} .9 & 0 \\ 0 & -.9 \end{bmatrix}, \quad B = \begin{bmatrix} 1 \\ 1 \end{bmatrix}, \quad C = \begin{bmatrix} 1 & 0 \\ 0 & 1 \end{bmatrix}, \quad D = \begin{bmatrix} 0 \\ 0 \end{bmatrix}.$$

The parameter $\delta > 0$ allows the size of Y to be scaled. Since $A^2B = .81B$, Remark 4.2 applies and $F = (1 - .81)^{-1}(BW + ABW)$, a rectangle with its corners at $\pm((1.9)^{-1}, 10)$ and $\pm(10, (1.9)^{-1})$. Clearly, $\Gamma = Y_0 = Y$. By Remark 5.2, $O_\infty \neq \emptyset$ if and only if $\delta \geq 10$. From $Y_1 = Y \sim BW = (\delta - 1)Y$, $O_0 = \Gamma = Y$, and $O_1 = O_0 \bigcap \{\phi: A\phi \in Y_1\}$ it follows, for $\delta \geq 10$, that $Y = O_0 = O_1 = O_\infty$. If $\delta > 10$, there are infinitely many d-invariant sets X which satisfy $F \subset X \subset O_\infty$. Suppose, for instance that $\delta = 20$. Then $[-\alpha, \alpha]^2$ is d-invariant and $F \subset [-\alpha, \alpha]^2 \subset O_\infty$ for all $\alpha \in [10, 20]$.

Remark 5.3 In general, F is a *proper* subset of O_∞, even when F and Γ contain common boundary points. This happens in the example when $\delta = 10$ and Y is the smallest output set such that $O_\infty \neq \emptyset$.

6 ALGORITHMIC DETERMINATION OF O_∞

Suppose $O_{t+1} = O_t$. Then, by (1.10), $O_{t+2} = O_{t+1}$ and $O_\infty = O_t$. This observation is the basis for the following conceptual algorithm:

ALGORITHM 6.1 Given A, B, C, D, W, Y.

Step 1: Set $t = 0$ and $O_0 = \Gamma = \{x \in \mathbb{R}^n\colon Cx \in Y \sim DW\}$. If $O_0 = \emptyset$, set $O_\infty = \emptyset$, $t^* = 0$ and stop.
Step 2: Determine Y_{t+1} by (5.3). If $Y_{t+1} = \emptyset$, set $O_\infty = \emptyset$, $t^* = t+1$ and stop.
Step 3: Determine O_{t+1} by (5.4). If $O_{t+1} = \emptyset$, set $O_\infty = \emptyset$, $t^* = t+1$ and stop.
Step 4: If $O_{t+1} = O_t$, set $O_\infty = O_t$, $t^* = t$ and stop.
Step 5: Replace t by $t+1$ and return to Step 2.

Remark 6.1 If Y and W are symmetric and convex the algorithm is simplified significantly: in Step 1 the test $O_0 = \emptyset$ is replaced by $0 \notin O_0$, in Step 2 the test $Y_{t+1} = \emptyset$ is replaced by the test $0 \notin Y_{t+1}$, in Step 3 it is only necessary to determine O_{t+1} by (5.4). The first and second simplifications follow directly from part (vi) of Theorem 5.1. The third simplification follows because $0 \in O_t$ and $0 \in Y_{t+1}$ imply $0 \in O_{t+1}$ which in turn implies $O_{t+1} \neq \emptyset$.

The algorithm stops if and only if O_∞ is finitely determined. If it does stop, t^* is the least t for which $O_\infty = O_t$.

Remark 6.2 If O_∞ is empty it is finitely determined. Assume to the contrary that $O_t \neq \emptyset$ for all $t \in \mathbb{Z}^+$. Then, as the intersection of a nonincreasing infinite sequence of nonempty compact sets, O_∞ is nonempty ([2,39]).

To adequately address finite determination when $O_\infty \neq \emptyset$, and other important issues, it is necessary to consider the behavior of Y_t

as $t \to \infty$. Define

$$Y_\infty = \bigcap_{t=0}^{\infty} Y_t. \tag{6.1}$$

Several properties of Y_∞ and their proofs are analogous to those of O_∞.

THEOREM 6.1 *Suppose $Y_\infty \neq \emptyset$. Then Y_∞ has the same properties as O_∞ has in parts* (ii)–(v) *of Theorem* 5.2.

It is possible to say much more when A is asymptotically stable. We begin with the following theorem.

THEOREM 6.2 *Assume A is asymptotically stable. Then*: (i) $Y_\infty = Y \sim (DW + CF)$. (ii) $O_\infty \neq \emptyset$ *if and only if* $0 \in Y_\infty$.

Proof Clearly, $Y_t = Y \sim (DW + CF_t)$. Result (i) follows immediately from Theorems 2.5 and 4.1. From part (vi) of Theorem 5.2, $O_\infty \neq \emptyset$ implies $0 \in O_\infty$; by (5.2) it then follows that $0 \in Y_t$ for all $t \in \mathrm{Z}^+$ and $0 \in \mathrm{Y}_\infty$. From (5.2) it also follows that $0 \in Y_\infty$ implies $0 \in Y_t$ for all $t \in \mathrm{Z}^+$; hence, $0 \in O_\infty$ and $O_\infty \neq \emptyset$.

Remark 6.3 When A is asymptotically stable the algorithmic simplifications of Remark 6.1 are obtained without special assumptions on Y and W. This is an obvious consequence of Theorems 5.2 and 6.2: $O_\infty \neq \emptyset$ implies $0 \in Y_\infty$ and $0 \in O_\infty$.

To guarantee finite determination of O_∞ when $O_\infty \neq \emptyset$ the condition $0 \in Y_\infty$ must be strengthened.

Theorem 6.3 *Assume A is asymptotically stable and $0 \in int\, Y_\infty$. Then O_∞ is finitely determined.*

Proof By part (iii) of Theorem 5.1, O_{n-1} is compact. Since $CA^t \to 0$ as $t \to \infty$ and $0 \in int\, Y_\infty$ it follows that $CA^{k+1} O_{n-1} \subset Y_\infty$ for some integer k, which we can choose to satisfy $k \geq n$. Because $O_k \subset O_{n-1}$, $CA^{k+1} O_k \subset Y_\infty \subset Y_{k+1}$. This result, and (5.2) imply $O_k \subset O_{k+1}$. Thus, $O_{k+1} = O_k = O_\infty$

In the disturbance free case, where $W = \{0\}$ and $Y_\infty = Y$, Theorem 6.2 agrees with Theorem 4.1 in [19]. As in [19], it is also possible to

make progress when A is only Lyapunov stable. Details are treated in the next section. Blanchini [10] gives a special version of Theorem 6.3 when the constraint $y(t) \in Y$ is replaced by $x(t) \in \Gamma$ and Γ is bounded and polyhedral; his conditions corresponding to $0 \in int\, Y_\infty$ involve the convergence of an infinite sum whose terms depend on evaluating h_W. About the same time, and independently, Tan [42] proved Theorem 6.3 for the special case when Y is bounded and polyhedral. While support functions played a crucial role in his proof, the assumption $0 \in int\, Y_\infty$ appeared explicitly in his statement of the theorem.

If A is asymptotically stable, O_∞ can fail to be finitely determined only if $0 \in Y_\infty$ and $0 \notin int\, Y_\infty$. Under these conditions on Y_∞ the issue of finite determination remains in doubt. This uncertainty is illustrated by the following example.

Example 6.1 Let $n = m = p = 1$, $W = [-1, +1]$, $Y = [-1, +1]$ and $A = B = C = D = \frac{1}{2}$. It can be verified that

$$Y_t = [-2^{-t-1}, 2^{-t-1}].$$

Hence, $Y_\infty = \{0\}$ and $int\, Y_\infty = \emptyset$. Since $O_0 = O_1 = [-1, +1]$, O_∞ is finitely determined.

Example 6.2 Let $n = 2$, $m = p = 1$, $W = \delta[-1, +1]$, $Y = [-1, +1]$ and

$$A = \begin{bmatrix} \lambda_1 & 0 \\ 0 & \lambda_2 \end{bmatrix}, \quad B = \begin{bmatrix} 1 \\ 1 \end{bmatrix}, \quad C = [1 \quad 1], \quad D = 0.$$

It can be verified that

$$Y_t = [-\sigma(t), \sigma(t)], \quad \sigma(t) = 1 - \delta\left(\frac{1 - \lambda_1^t}{1 - \lambda_1} + \frac{1 - \lambda_2^t}{1 - \lambda_2}\right). \tag{6.2}$$

Assume $\lambda_1 = \frac{1}{2}$, $\lambda_2 = \frac{5}{8}$, $\delta = \frac{3}{14}$. Then (6.2) shows $Y_\infty = \{0\}$. Moreover, the set $\{x\colon CA^t x \in Y_t\} \subset \mathbb{R}^2$ is an infinite strip bounded by the lines $(\frac{1}{2})^t x^1 + (\frac{5}{8})^t x^2 = \pm\sigma(t)$. By inspecting the intersection of these strips it can be seen that O_∞ is *not* finitely determined.

Remark 6.4 Fortunately, the situation, $0 \in Y_\infty$, $0 \notin int\, Y_\infty$, is rare. If it does occur it can be circumvented by an arbitrary small enlargement of Y. Suppose A is asymptotically stable. By part (i) of

Theorem 6.2 and the definition of P-subtraction $0 \in int Y_\infty$ is equivalent to $DW + CF \subset int Y$ and $0 \in Y_\infty$ is equivalent to $DW + CF \subset Y$. Hence, if O_∞ is not finitely determined it becomes so if Y is replaced by $Y + \epsilon \mathcal{B}^p$, where $\epsilon > 0$.

To make Algorithm 6.1 practical it is necessary to have numerical procedures for carrying out the recursions (5.3) and (5.4) and for testing the conditions $Y_t = \emptyset$, $O_t = \emptyset$ and $O_{t+1} = O_t$. If Y is a polytope and h_W can be evaluated numerically this is easily done: Let Y be defined by

$$Y = \{y \in \mathbb{R}^p \colon Sy \leq r\}, \tag{6.3}$$

where Y is compact and

$$S = [s_1 \cdots s_M]^{\mathrm{T}} \in \mathbb{R}^{M \times p}, \quad r = [r^1 \cdots r^M]^{\mathrm{T}} \in \mathbb{R}^M, \; r^i \geq 0, \; i = 1, \ldots, M. \tag{6.4}$$

The components of r are non-negative because $0 \in Y$. It follows from Theorem 2.3 that

$$Y_t = \{y \in \mathbb{R}^p \colon Sy \leq r_t\}, \tag{6.5}$$

where the components of r_t are determined by the recursions

$$\begin{aligned} r_0^i &= r^i - h_W(D^{\mathrm{T}} s_i), \\ r_{t+1}^i &= r_t^i - h_W((CA^t B)^{\mathrm{T}} s_i), \quad i = 1, \ldots, M. \end{aligned} \tag{6.6}$$

Since $0 \in W$, $h_W(\eta) \geq 0$ for all $\eta \in \mathbb{R}^m$. Thus the elements of r_t are monotonic: $r_{t+1}^i \leq r_t^i$ for all $t \in \mathbb{Z}^+, i = 1, \ldots, M$. If $Y_\infty \neq \emptyset$, then $r_t^i \to r_\infty^i \geq 0$ and $Y_\infty = \{y \in \mathbb{R}^p \colon Sy \leq r_\infty\}$.

The recursion (5.4) becomes

$$O_t = \{\phi \in \mathbb{R}^n \colon H_t \phi \leq g_t\}, \quad H_t \in \mathbb{R}^{N_t \times m}, \quad g_t \in \mathbb{R}^{N_t}, \tag{6.7}$$

where

$$\begin{aligned} H_0 &= SC, & g_0 &= r_0, \\ H_{t+1} &= \begin{bmatrix} H_t \\ SCA^{t+1} \end{bmatrix}, & g_{t+1} &= \begin{bmatrix} g_t \\ r_{t+1} \end{bmatrix}, \quad N_t = M(t+1). \end{aligned} \tag{6.8}$$

We state the resulting algorithm, taking advantage of Remarks 6.1 and 6.3.

ALGORITHM 6.2 Given A, B, C, D, W, Y with Y defined by (6.3) and (6.4). Suppose either W is symmetric and convex and Y is symmetric or A is asymptotically stable.

Step 1: Set $t=0$. Compute r_0 by (6.6). If $r_0 \geq 0$ continue. Otherwise set $t^* = 0$ and $O_\infty = \emptyset$.
Step 2: Compute r_{t+1} by (6.6). If $r_{t+1} \geq 0$ continue. Otherwise set $t^* = t+1$ and $O_\infty = \emptyset$.
Step 3: Compute H_{t+1} and g_{t+1} by (6.8).
Step 4: Using $H_t, g_t, H_{t+1}, g_{t+1}$ determine if $O_t = O_{t+1}$. If $O_t \neq O_{t+1}$ continue. If $O_t = O_{t+1}$ set $t^* = t$ and $O_\infty = O_t$.
Step 5: Replace t by $t+1$ and return to Step 2.

Step 4 is by far the most complex operation in the algorithm. It is implemented by linear programming. The process is made more efficient by eliminating redundant scalar inequalities which may appear in the definition of O_{t+1}. This is carried out each time H_t is updated to H_{t+1}. The elimination begins by checking the first, added scalar inequality, $s_1^{\mathrm{T}} CA^{t+1}\phi \leq r_{t+1}^1$, for redundancy. This is done by solving the linear program: maximize $s_1^{\mathrm{T}} CA^{t+1}\phi$ subject to $\bar{H}_{t+1}\phi \leq \bar{g}_{t+1}$, where $\bar{H}_{t+1}\phi \leq \bar{g}_{t+1}$ is obtained by removing the (N_t+1)th row of H_{t+1} and the (N_t+1)th element of g_t. If $\max s_1^{\mathrm{T}} CA^{t+1}\phi \leq r_{t+1}^1$, the inequality is redundant and is eliminated by setting $H_{t+1} = \bar{H}_{t+1}$ and $g_{t+1} = \bar{g}_{t+1}$. If $\max s_1^{\mathrm{T}} CA^{t+1}\phi > r_{t+1}^1$, the inequality must be kept and H_{t+1} and g_{t+1} remain unchanged. The testing and the potential removal of the remaining inequalities proceeds similarly. At the end, $N_{t+1} = N_t + M - \bar{M}_t$, where $\bar{M}_t$ is the number of redundant inequalities. Typically, N_t produced in this way is much smaller than $(t+1)M$. The procedure for eliminating redundancies also implements Step 4 of Algorithm 4.1: $O_{t+1} = O_t$ if and only if all the added inequalities are redundant ($\bar{M}_t = M$).

Remark 6.5 It is also possible to develop, along similar lines, a numerical procedure for determining O_∞ which is based on recursion (1.10) (see [10,11]). This approach is usually much more expensive because it requires the computation of $O_t \sim BW$, which involves N_t inequalities in $\mathbb{R}^n$ rather than the M inequalities in $\mathbb{R}^p$ defined by (6.6).

Because of the computational expense associated with Steps 3 and 4 it is often helpful to determine whether or not O_∞ is empty before these steps are implemented. This can be done by applying (6.6) independently and allowing t to become large. Since the recursions (6.6) are quite simple the computational expense is not great. We formalize this idea in the following remark.

Remark 6.6 Suppose A is asymptotically stable. If $r_t^i < 0$ for any $i = 1, \ldots, M$ it follows that $O_\infty = \emptyset$. To show that O_∞ is nonempty and finitely determined requires an estimate of $\sum_{k=t}^{\infty} h_W((CA^kB)^{\mathrm{T}} s_i)$. Let $\gamma > 0$ be chosen so that $W \subset \gamma \mathcal{B}^m$. Then $0 \le h_W(\eta) \le \gamma |\eta|_2$ for all $\eta \in \mathbb{R}^m$. Suppose further that $0 \le \mu < 1$ is the spectral radius of A. Then it is computationally easy to determine constants $\zeta_i > 0$, $i = 1, \ldots, M$, such that $|(CA^tB)^{\mathrm{T}} s_i|_2 \le \zeta_i \mu^t$ for all $t \in \mathrm{Z}^+$. Combining these results shows that $\sum_{k=t}^{\infty} h_W((CA^kB)^{\mathrm{T}} s_i) \le \sigma_t^i$, where $\sigma_t^i = \gamma \zeta_i (1-\mu)^{-1} \mu^t \to 0$ as $t \to \infty$. Defining $Y_t' = \{y \in \mathbb{R}^p\colon S_y \le r_t - \sigma_t\}$ it follows that $Y_t' \subset Y_\infty$. Thus, a *sufficient condition* for O_∞ to be nonempty and finitely determined is $r_t - \sigma_t > 0$. Suppose $0 \in int\, Y_\infty$. Then $0 < r_\infty \le r_t$ and there exists a t such that $r_t - \sigma_t > 0$.

Expressions (6.3)–(6.8) still apply when Y and W are not symmetric and A is not asymptotically stable. However, it is necessary to go back to the steps of Algorithm 6.1 and test $Y_{t+1} = \emptyset$ and $O_{t+1} = \emptyset$ by solving an appropriate linear programming problem, such as the one described in Remark 2.2.

If Y is not polyhedral it is not clear how to proceed numerically. Perhaps the best approach is to approximate Y by a polyhedral set Y^k and use $O_\infty(A, B, C, D, W, Y^k)$ as an approximation of $O_\infty(A, B, C, D, W, Y)$. When Y is compact and convex this approach has a mathematically rigorous basis. Then [39] there exists a sequence of polytopes Y^k, $k \in \mathrm{Z}^+$, such that $Y^k \supset Y^{k+1} \supset Y$ and $Y^k \to Y$. The application of the Y^k to the approximation of O_∞ is established in the following theorem. For each t let the sets $Y_t^k, Y_\infty^k, O_t^k, O_\infty^k$ be defined for (A, B, C, D, W, Y^k) in the same way as $Y_t, Y_\infty, O_t, O_\infty$ are defined for (A, B, C, D, W, Y).

THEOREM 6.3 *Suppose Y is compact, A is asymptotically stable and $0 \in int\, Y_\infty$. Let $\{Y^k \in \mathbb{R}^p,\ k \in \mathrm{Z}^+\}$ be a sequence of compact sets such that $Y^k \supset Y^{k+1}$ and $Y^k \to Y$. Then there exists $l \in \mathrm{Z}^+$ such that for each $k \in \mathrm{Z}^+$, $O_\infty^k = O_l^k \ne \emptyset$, O_∞^k is compact and $O_\infty^k \to O_\infty$.*

Proof By Theorem 2.5, $Y_t^k \to Y_t$ as $k \to \infty$ for all $t \in Z^+$. By Theorems 5.1 and 6.2 O_t^k is nonempty and compact for all $t \geq n-1$; since $O_t \subset O_t^{k+1} \subset O_t^k$, this implies that for all $t \geq n-1$ there exists a compact set O_t^* such that $O_t \subset O_t^*$ and $O_t^k \to O_t^*$ as $k \to \infty$. Let $x \in O_t^*$; then by (5.2) $CA^\tau x \in Y_\tau^k$, $\tau = 0, \ldots, t$, for all $k \in Z^+$. Since $Y_\tau^k \to Y_\tau$, this implies $CA^\tau x \in Y_\tau$, $\tau = 0, \ldots, t$, and $O_t^* = O_t$. Because O_{n-1}^0 is compact and $0 \in int Y_\infty$ there exists $l \in Z^+$ such that $CA^{l-1}O_{n-1}^0 \subset Y_\infty$. Since $Y_\infty \subset Y_\infty^k \subset Y_\infty^0$, $O_{n-1} \subset O_{n-1}^k \subset O_{n-1}^0$ for all $k \in Z^+$, the inclusions $CA^{l+1}O_{n-1}^k \subset Y_\infty^k$, $CA^{l+1}O_{n-1} \subset Y_\infty$ hold for all $k \in Z^+$. Hence, following the proof of Theorem 6.3, $O_\infty^k = O_l^k$, $O_\infty = O_l$ for all $k \in Z^+$.

Remark 6.7 We have assumed that W is specified. The theorem is also valid if W is represented by a sequence of approximating compact sets: $\{W^k: k \in Z^+\}$, $W^k \subset W^{k+1} \subset W$ for all $k \in Z^+$.

Remark 6.8 While the notational details are rather complex, the idea described in the last paragraph of Section II can be used to determine a measure of how accurately O_l^k approximates O_∞. It is necessary to have an inner approximation of Y, $Y_k^- \subset Y$, on which Y_k is based.

We conclude this section with two numerical examples which illustrate the application of Algorithm 6.2.

Example 6.3 Let A and B be defined as in Example 4.1. Set $W = \delta[-1, +1]$, $Y = [-1, +1]^2$ $(M = 4)$, $C = I_2$ and $D = B$. Table I and Fig. 2 show the results for several values of the disturbance amplitude δ. Redundant inequalities are removed in Step 4; thus N_{t^*} is considerably smaller than $(t^* + 1)M$. As expected, O_∞ gets smaller as δ increases. There is a transition value for $\delta, 0.23076969230 < \delta^* < 0.23076969231$, such that $O_\infty \neq \emptyset$ for $0 \leq \delta \leq \delta^*$ and $O_\infty = \emptyset$ for $\delta > \delta^*$. The case f is not shown in Fig. 2 because it is close in

TABLE I Results for Example 6.3

Case	*a*	*b*	*c*	*d*	*e*	*f*	*g*
δ	0	0.05	0.15	0.2	0.2307	0.23076969230	0.23076969231
t^*	1	1	2	2	4	11	19
N_{t^*}	6	6	4	6	10	4	$O_\infty = \emptyset$

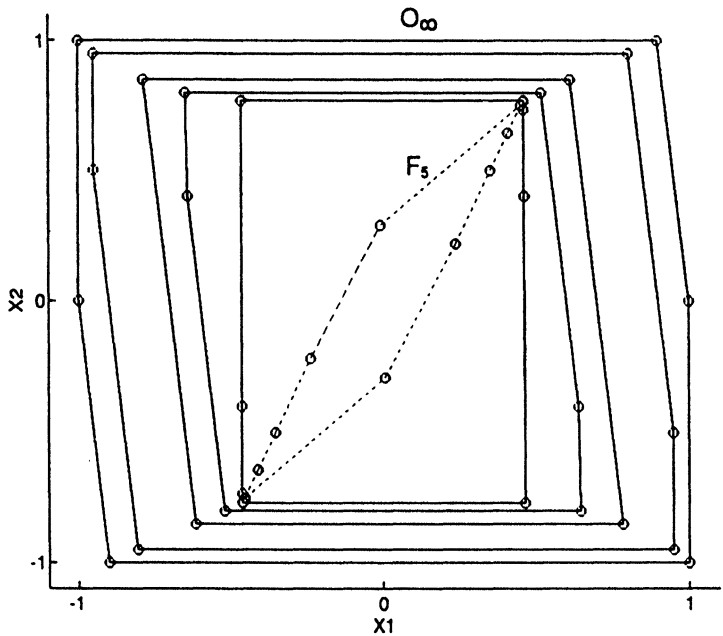

FIGURE 2 The dependence of O_∞ on δ in Example 6.3 for cases a, b, c, d and e of Table I.

appearance to case e: the four sides of O_∞ which are most visible move in slightly and the six inequalities which are active at the upper right and lower left corners of O_∞ are dropped. The set F_5 for case e is designated by the dashed lines. Its closeness to the corresponding O_∞ indicates F_5 is close to F for $\delta \approx \delta^*$.

Example 6.4 The system is an inverted pendulum on a cart where the available control force applied to the cart is limited and there is sensor noise. Linearizing Lagrange's equations about the upper vertical position of the pendulum and zero position of the cart gives [33]

$$\frac{\mathrm{d}}{\mathrm{d}t}\begin{pmatrix} x^1 \\ x^2 \\ x^3 \\ x^4 \end{pmatrix} = \begin{pmatrix} 0 & 1 & 0 & 0 \\ 0 & 0 & -\frac{mg}{M} & 0 \\ 0 & 0 & 0 & 1 \\ 0 & 0 & \frac{(M+m)g}{Ml} & 0 \end{pmatrix}\begin{pmatrix} x^1 \\ x^2 \\ x^3 \\ x^4 \end{pmatrix} + \begin{pmatrix} 0 \\ \frac{1}{M} \\ 0 \\ -\frac{1}{Ml} \end{pmatrix} u,$$

where $x^1 = s$ is the displacement of the cart in meters, $x^2 = \dot{s}$, $x^3 = \theta$ is the angle of the pendulum in radians, $x^4 = \dot{\theta}$, u is the control force applied to the cart in newtons, m is the mass of the pendulum in kilograms, M is the mass of the cart in kilograms, l is the length of the pendulum in meters and g is the acceleration due to gravity. The values of the parameters are $m = M = 0.5$, $l = 1.4$ and $g = 10$. The open loop eigenvalues are 0, 0, 3.7796 and -3.7796. A discrete-time model of the system, $x(t+1) = A_p x(t) + B_p u(t)$, $t \in \mathbf{Z}^+$, is obtained by sampling the state at tT and by generating the control force with a zero order hold. The sample period is $T = 0.1$ s. The feedback controller has the form

$$u(t) = K(x(t) + \Phi w(t)), \tag{6.9}$$

where $w(t) \in W$ is the sensor noise and $u(t)$ saturates for $|u(t)| > 1/2$. Saturation can be avoided by requiring that $u(t) \in Y \in [-1/2, 1/2]$. The closed loop system is represented in the form (1.1)–(1.2) by setting $y(t) = u(t)$, $A = A_p + B_p K$, $B = B_p K\Phi$, $C = K$, $D = K\Phi$. An LQR design yields $K = [0.5451, 1.8357, 27.2815, 8.6552]$ and closed loop eigenvalues: $0.4611, 0.9553, 0.8210 \pm 0.0257i$.

For sufficiently small measurement noise and initial conditions saturation is avoided and the system is stable in the sense that state of the pendulum tends to the set F, described in Section 3. If saturation is reached the instability of the open-open loop plant may take over and the pendulum may diverge from its near vertical position. Initial conditions belonging to O_∞ are safe in the sense that they belong to a *domain of attraction*, a set of initial conditions that yield state trajectories which are attracted to F for all $w \in \mathcal{W}$.

We assume that only the angle measurements are noisy. Specifically, $\Phi = [0, 0, 1, 0]^{\mathrm{T}}$ and $W = \delta[-1, 1]$. The maximal output admissible sets were computed for several levels of sensor noise: $\delta = 0$, 0.001, 0.003, 0.00475, 0.0048. The corresponding values of t^* were: 27, 27, 28, 39 and 153. Except for $\delta = 0.0048$, $O_\infty \neq \emptyset$. Thus, stable operation is guaranteed for $\delta \leq 0.00475$. Cross sections of the sets O_∞ by the plane $s(0) = \dot{s}(0) = 0$ are shown in Fig. 3(a). They show initial angles and initial angular rates for which saturation never occurs provided that $s(0) = \dot{s}(0) = 0$. Cross sections of the sets O_∞ by the plane $\theta(0) = \dot{\theta}(0) = 0$ are shown in Fig. 3(b).

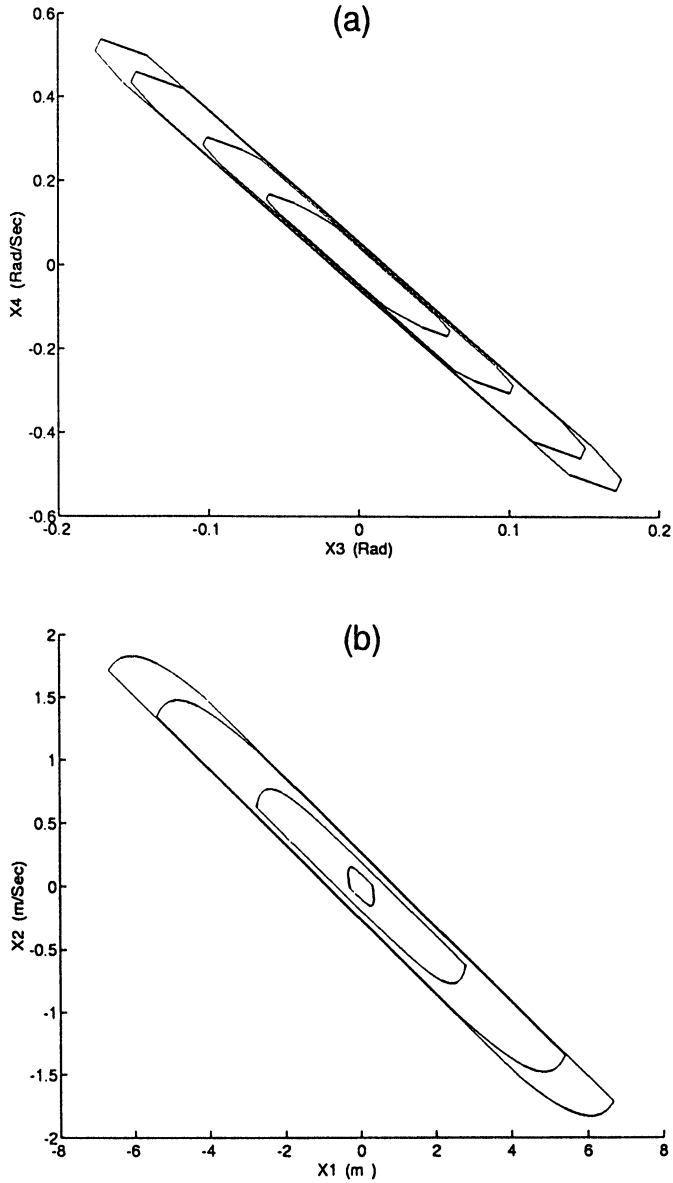

FIGURE 3 Cross sections of O_∞ for measurement noise on pendulum angle. Noise level $\delta = 0, 0.001, 0.003, 0.00475$. (a) $\theta(0)$, $\dot{\theta}(0)$ cross section for $s(0) = \dot{s}(0) = 0$. (b) $s(0)$, $\dot{s}(0)$ cross section for $\theta(0) = \dot{\theta}(0) = 0$.

7 FINITE DETERMINATION AND LYAPUNOV STABLE A

As simple examples in the disturbance-free case show [19], O_∞ is, typically, not finitely determined when A is Lyapunov stable but not asymptotically stable. In this section we demonstrate that, under appropriate assumptions, there exists a finitely-determined inner approximation of O_∞ by another maximal output admissible set which is computed for a system obtained from the original system by introducing additional constrained output variables. In this respect the results that follow are similar to those presented in [19]. However, the details are considerably more complex because they apply to more general, Lyapunov stable A and to systems with disturbance inputs. The new results have applications to systems with constant inputs or conservative dynamics. Also, they play a crucial role in developing nonlinear controllers for systems with state and control constraints such as the reference governor [20–22] and multimode controllers [31]. We conclude this section by discussing systems with constant inputs and giving a numerical example. An application to multimode control is described in the next section.

Specifically, we are concerned with system (1.1)–(1.2) for the case

$$A = \begin{bmatrix} A_L & 0 \\ 0 & A_S \end{bmatrix}, \quad B = \begin{bmatrix} 0 \\ B_S \end{bmatrix}, \quad C = [\, C_L \quad C_S \,], \tag{7.1}$$

where $A_L \in \mathbb{R}^{q_1 \times q_1}$ has simple eigenvalues that all lie on the unit circle, $A_S \in \mathbb{R}^{q_2 \times q_2}$ is asymptotically stable, $B_S \in \mathbb{R}^{q_2 \times m}$, $C_L \in \mathbb{R}^{p \times q_1}$, $C_S \in \mathbb{R}^{p \times q_2}$ and $q_1 + q_2 = n$. Clearly, the indicated partitioning of A is always possible by a suitable choice of state space coordinates. In fact, it is always possible to choose coordinates that make A_L real and orthogonal. Results for O_∞ in different coordinate systems can be obtained by using part (viii) of Theorem 5.2. It is assumed that the disturbance $w(t)$ does not influence the "neutrally stable states" associated with A_L. This is a natural assumption. Otherwise, these states diverge and, with Y compact, O_∞ is empty. The special structure of B also implies $F = \{0\} \times F^S$, where $F_t^S = \sum_{k=0}^{t} A_S^k B_S W$ and $F_t^S \to F^S$ in the same way as $F_t \to F$ in Theorem 4.1. Correspondingly,

$Y_{t+1} = Y_t \sim C_S A_S^t B_S W$, and

$$O_\infty = O_\infty(A, B, C, D, W, Y) = \{x = [x_L^{\mathrm{T}}\ x_S^{\mathrm{T}}]^{\mathrm{T}} \in \mathbb{R}^{q_1+q_2}\colon C_L A_L^t x_L + C_S A_S^t x_S \in Y_t\ \forall t \in \mathrm{Z}^+\}. \tag{7.2}$$

With the exception of part (vi) of Theorem 5.2, the results of Section 5 remain in effect. In addition, O_∞ has a special structure.

THEOREM 7.1 *Suppose* $0 \in Y_\infty$. *Define*

$$L_\infty = \{x_L \in \mathbb{R}^{q_1}\colon C_L A_L^t x_L \in Y_\infty\ \forall t \in \mathrm{Z}^+\}. \tag{7.3}$$

Then (i) L_∞ *is compact and* $0 \in L_\infty$; (ii) $L_\infty \times F^S \subset O_\infty \subset L_\infty \times \mathbb{R}^{q_2}$.

Proof Part (i) is an obvious consequence of (7.3), the observability of (A_L, C_L) and the compactness of Y_∞. Suppose that the right inclusion in (ii) is not satisfied. Then there exists $x = [x_L^{\mathrm{T}}\ x_S^{\mathrm{T}}]^{\mathrm{T}} \in O_\infty$ such that $x_L \notin L_\infty$. Thus, $y(t) = C_L A_L^t x_L + C_S A_S^t x_S \in Y_t$ for all $t \in \mathrm{Z}^+$ and there exists $\tilde{t} \in \mathrm{Z}^+$ such that $\tilde{y} = C_L A_L^{\tilde{t}} x_L \notin Y_\infty$. Since A_L has simple roots on the unit circle, Poincare's recurrence theorem [1] implies the existence of an infinite subset $T \subset \mathrm{Z}^+$ such that $\lim_{t\to\infty, t\in T} C_L A_L^t x_L = \tilde{y}$. By the asymptotic stability of A_S, $\lim_{t\to\infty, t\in T} y(t) = \tilde{y}$, where $y(t) \in Y_t \supset Y_\infty$ for all $t \in T$. Since Y_∞ is compact and $Y_t \to Y_\infty$ this implies $\tilde{y} \in Y_\infty$, which is a contradiction. Now suppose $x_L \in L_\infty$. Then by (7.2) and (7.3), $\tilde{x} = [x_L^{\mathrm{T}}\ 0^{\mathrm{T}}]^{\mathrm{T}} \in O_\infty$. With $x(0) = \tilde{x}$ it follows by the definition of O_∞ that the solution of (1.1) satisfies $x(t) = [x_L^{\mathrm{T}}(t)\ x_S^{\mathrm{T}}(t)]^{\mathrm{T}} \in O_\infty$ for all $t \in \mathrm{Z}^+$, $x_L \in L_\infty$ and $w \in W$. Hence, $L_\infty \times F_t^S \subset O_\infty$ for all $t \in \mathrm{Z}^+$. The left inclusion of (ii) is apparent from Theorem 4.1 and the compactness of O_∞.

The geometry of the situation is displayed in Fig. 4. O_∞ is contained in the cylinder set $L_\infty \times \mathbb{R}^{q_2}$ and, because $L_\infty \times F^S \subset O_\infty$, $O_\infty \neq \emptyset$. To obtain a finitely determined approximation of O_∞ we intersect O_∞ with a somewhat smaller cylinder whose base, L', is a proper subset of L_∞. See $\hat{O}_\infty$ in Fig. 4. The intersection is implemented by introducing the system $A, B, \hat{C}, \hat{D}, W, \hat{Y}$ where

$$\hat{C} = \begin{bmatrix} I_{q_1} & 0 \\ C_L & C_S \end{bmatrix}, \quad \hat{D} = \begin{bmatrix} 0 \\ D \end{bmatrix}, \quad \hat{Y} = L' \times Y. \tag{7.4}$$

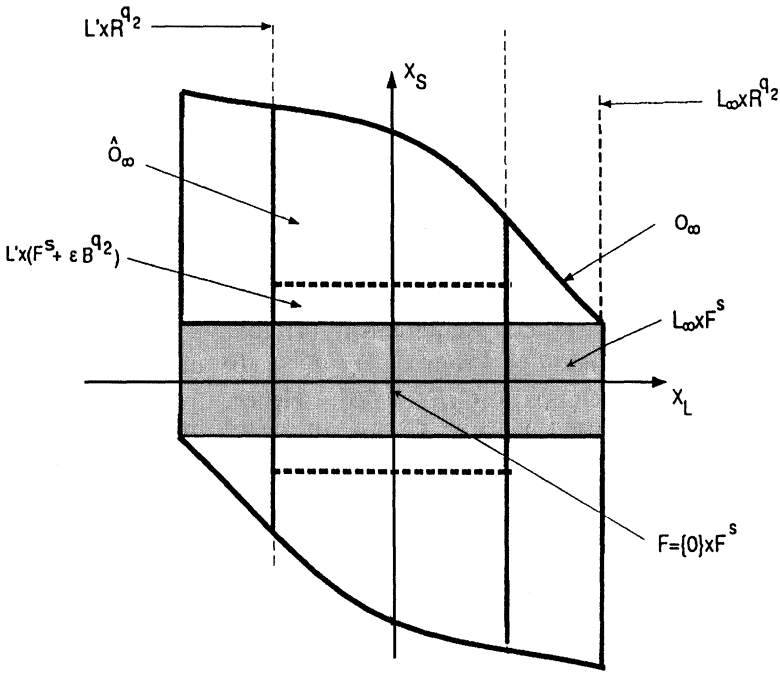

FIGURE 4 Sets in Theorems 7.1 and 7.2.

The associated maximal output admissible set is:

$$\begin{aligned}\hat{O}_\infty &= O_\infty(A, B, \hat{C}, \hat{D}, W, \hat{Y}) \\ &= \{x = \begin{bmatrix} x_L^{\mathrm{T}} & x_S^{\mathrm{T}} \end{bmatrix}^{\mathrm{T}} \in \mathbb{R}^{q_1+q_2} \colon x_L \in L', C_L A_L^t x_L \\ &\quad + C_S A_S^t x_S \in Y_t \ \forall t \in \mathrm{Z}^+\}. \end{aligned} \tag{7.5}$$

THEOREM 7.2 *Assume* $0 \in int\, Y_\infty$. *Let* $Y' \subset \mathbb{R}^p$ *be a compact set which satisfies the following conditions*: $int\, Y' \neq \emptyset$, $0 \in int\, Y'$, $Y' \subset int\, Y_\infty$. *Define*

$$L' = \{x_L \in \mathbb{R}^{q_1} \colon C_L A_L^t x_L \in Y' \ \forall t \in \mathrm{Z}^+\}. \tag{7.6}$$

Then (i) L' *is compact and* $0 \in int L'$; (ii) *There exists* $\epsilon > 0$ *such that* $L' \times (F^S + \epsilon B^{q_2}) \subset \hat{O}_\infty = (L' \times \mathbb{R}^{q_2}) \bigcap O_\infty$; (iii) $\hat{O}_\infty$ *is finitely determined.*

Proof Result (i) is an obvious consequence of the assumptions on Y' and the observability of C_L, A_L. The set equality in (ii) follows from (7.2) and (7.5). Consider the left inclusion. Since Y_∞ and Y' are compact and $Y' \subset int Y_\infty$, there exists an $\epsilon' > 0$ such that $Y' + \epsilon' \mathcal{B}^p \subset Y_\infty$. Let $\epsilon > 0$ be chosen so that $C_S A_S^t(\epsilon \mathcal{B}^{q_2}) \subset \epsilon' \mathcal{B}^p$ for all $t \in \mathbf{Z}^+$. Suppose $x_L(0) \in L'$ and $x_S(0) \in F^S + \epsilon \mathcal{B}^{q_2}$ and let $x(t) = [x_S(t)^{\mathrm{T}}\ x_L(t)^{\mathrm{T}}]^{\mathrm{T}}$ denote the solution of (1.1) with A, B, C defined by (7.1). By (7.5), the left inclusion is proved if it can be shown that: (a) $x_L(t) \in L'$ for all $t \in \mathbf{Z}^+$, (b) $y(t) = Dw(t) + C_L x_L(t) + C_S x_S(t) \in Y$ for all $w(t) \in W$ and $t \in \mathbf{Z}^+$. Requirement (a) follows from $x(0) \in L'$, $x_L(t) = A^t x_L(0)$ and (7.6). From $x_S(0) \in F^S + \epsilon \mathcal{B}^{q_2}$ and the A_S invariance of F^S, $C_S x_S(t) \in C_S F^S + \epsilon' \mathcal{B}^p$. Hence, $y(t) \in DW + Y' + C_S F^S + \epsilon' \mathcal{B}^p \subset DW + Y_\infty + C_S F^S$ for all $t \in \mathbf{Z}^+$. By Theorem 6.2, $Y_\infty = Y \sim (DW + C_S F^S)$. This and part (ii) of Theorem 2.1 complete the verification of (b). Now consider (iii). Clearly, $\hat{O}_\infty$ is compact. Let $\tilde{t} \in Z^+$ be chosen so that $C_S A_S^t x_S \in \epsilon' \mathcal{B}^p$ for all $t \geq \tilde{t}$ and for all x_S such that $[x_L^{\mathrm{T}}\ x_S^{\mathrm{T}}]^{\mathrm{T}} \in \tilde{O}_\infty$.Then by (7.5), (7.6) and $Y' + \epsilon' \mathcal{B}^p \subset Y_\infty \subset Y_t$ it follows that $\hat{O}_\infty = \hat{O}_{\tilde{t}}$.

While the main contribution of the theorem is finite determination, the left inclusion of (ii) is also of interest; it is stronger with respect to x_S then the corresponding inclusion in part (ii) of Theorem 7.1. See Fig. 4. The stronger inclusion is crucial in the reference governor applications [21,22]. As expected the approximation $\hat{O}_\infty \approx O_\infty$ improves as Y' more closely approximates Y_∞. This statement can be made precise. Let $\tilde{L} = \{x_L \in \mathbb{R}^{q_1}\colon C_L A_L^t x_L \subset Y\ \forall t = 0, \ldots, q_1 - 1\}$; since C_S, A_S is observable and Y is compact, $\tilde{Y}$ is compact.

THEOREM 7.3 *Suppose the assumptions of Theorem* 7.2 *are satisfied and* Y' *is convex. Let* α' *and* $\tilde{\alpha}$ *be positive constants such that* $\alpha' \mathcal{B}^p \subset Y'$ *and* $\tilde{L} \subset \tilde{\alpha} \mathcal{B}^{q_1}$. *Then* $Y' \subset Y_\infty \subset Y' + \epsilon \mathcal{B}^p$ *implies* $\hat{O}_\infty \subset O_\infty \subset \hat{O}_\infty + \epsilon \tilde{\alpha}/\alpha' \mathcal{B}^n$.

Proof Since Y' is convex and $Y_\infty \subset Y' + (\epsilon/\alpha')Y'$, $Y_\infty \subset (1 + (\epsilon/\alpha'))Y'$. It follows that $L_\infty \subset (1 + (\epsilon/\alpha'))L'$. By $Y' \subset Y_\infty \subset Y$, $L' \subset \tilde{L} \subset \tilde{\alpha} \mathcal{B}^{q_1}$. Thus, $L_\infty \subset L' + (\epsilon \tilde{\alpha}/\alpha')\mathcal{B}^{q_1}$. This, $O_\infty = (L_\infty \times \mathbb{R}^{q_2}) \bigcap O_\infty$ and $\tilde{O}_\infty = (L' \times \mathbb{R}^{q_2}) \bigcap O_\infty$ complete the proof.

The bound, $\rho(O_\infty, \tilde{O}_\infty) \leq \epsilon \tilde{\alpha}/\alpha'$, on the Hausdorff distance between O_∞ and $\hat{O}_\infty$ is tightened by choosing α' as large as possible

and ϵ and $\tilde{\alpha}$ as small as possible, subject to the stated conditions. The key parameter is ϵ; if Y is convex then Y_∞ is convex and in principle it can be made as small as desired as in the disturbance-free case ($W = \{0\}$) [19]. There is generally a tradeoff between approximation accuracy and simplicity: both t^* and the complexity of $\hat{O}_\infty$ tend to increase as $Y' \to Y_\infty$.

Usually, Y_∞ does not have an explicit representation. Thus it is necessary to base the choice of Y' on Y_t for some sufficiently large t. When Y is convex this can be done so that $\hat{O}_\infty$ approximates O_∞ to a specified level of accuracy. We now sketch the details when Y is a polytope. Recall the notations and results of Remark 6.6, substituting A_S, B_S, C_S for A, B, C. Suppose it has been determined for some t that $r_t - \sigma_t > 0$. Then $0 \in int\, Y_t \subset int\, Y_\infty$ and $r_t - \sigma_t < r_\infty$. Let $0 < \alpha < 1$ be specified. Since $\sigma_t \to 0$ and $r_t \to r_\infty$ as $t \to \infty$, there exists a $\bar{t}$ such that $\sigma_{\bar{t}} \leq \alpha r_{\bar{t}}$. Let $r' \in \mathbb{R}$ satisfy $0 < (1-\alpha) r_\infty < (1-\alpha) r_{\bar{t}} < r' < r_{\bar{t}} - \sigma_{\bar{t}} < r_\infty$ and define $Y' = \{y \in \mathbb{R}^p\colon\ Sy \leq r'\}$. Then, $0 \in int\, Y' \subset int\, Y_\infty$ and $Y' \subset Y_\infty \subset (1-\alpha)^{-1} Y'$. Thus, $L' \subset L_\infty \subset (1-\alpha)^{-1} L'$. This, $Y_t \subset (1-\alpha)^{-1} Y_t$ for all $t \in \mathbf{Z}^+$, (7.5) and Theorem 7.2 show that $\hat{O}_\infty \subset O_\infty \subset (1-\alpha)^{-1} \tilde{O}_\infty$. Let κ be chosen so that $O_\infty \subset \kappa \mathcal{B}^n$. Then $\hat{O}_\infty \subset O_\infty \subset \tilde{O}_\infty + \alpha(1-\alpha)\kappa \mathcal{B}^n$ and $\tilde{O}_\infty \to O_\infty$ as $\alpha \to 0$.

The algorithmic determination of $\hat{O}_\infty$ cannot proceed unless L' has a concrete representation. If A_L is cyclic, i.e., $A_L^k = A_L$ for some $k \in \mathbf{Z}^+$, there is no problem: $L' = \{x_L \in \mathbb{R}^{q_1}\colon\ CA_L^t x_L \in Y', t = 0, 1, \ldots, k-1\}$. The simplest case $A_L = I_{q_1}$ is mentioned in [22]. If A_L is noncyclic, L' is itself not finitely determined. Even so, it is often possible to obtain simple, explicit representation for L'. A general discussion would be lengthy, so instead we demonstrate the main ideas with several examples where Y' is a polytope.

Suppose without loss of generality the state space coordinates have been chosen so that A_L is block diagonal where the blocks have the form $[1], [-1] \in \mathbb{R}^{1 \times 1}$ or

$$\Psi(\theta) = \begin{bmatrix} \cos\theta & \sin\theta \\ -\sin\theta & \cos\theta \end{bmatrix}, \quad 0 < \theta < \pi. \tag{7.7}$$

A_L is noncyclic if and only if it has at least one "Ψ" block with $\theta/2\pi$ irrational. For $Y' = \{y \in \mathbb{R}^p\colon\ s_i^{\mathrm{T}} y \leq r_i',\ i = 1, \ldots, M\}$, $L' = \bigcap_{i=1}^m L_i'$ where $L_i' = \{z \in \mathbb{R}^{q_1}\colon\ e_i^{\mathrm{T}} A_L^t z \leq 1\ \forall t \in \mathbf{Z}^+\}$ and $e_i = (r_i')^{-1} C_L^{\mathrm{T}} s_i$. To eliminate trivialities it is assumed that $e_i \neq 0$.

Consider first the case where $q_1 = 2$ and $A_L = \Psi(\theta)$ is noncyclic. Obviously, $e_i^{\mathrm{T}} A_L^t = p_i[\cos(t\theta + \theta_i)\ \sin(t\theta + \theta_i)]$, where $p_i = |e_i|_2$. Thus, L_i' is the intersection of infinitely many half spaces, whose boundary lines are tangent to the disk $\mathcal{B}^2$ and assume essentially all angular orientations. It follows that $L_i' = p_i^{-1}\mathcal{B}^2$ and $L' = p_{\max}^{-1}\mathcal{B}^2$ where $p_{\max} = \max\{p_i\colon i = 1, \ldots, M\}$. The set $\hat{Y} = L' \times Y$, which determines $\hat{O}_\infty$, is not polyhedral, as it is when A_L is cyclic. For computational purposes this suggests approximating L' by a polyhedron, $L'' \subset L'$. Since L' is a disk, L'' is a polygon and the construction of the approximation is easy.

Although the details are more varied and complex, similar developments apply when $q_1 > 2$. Suppose $q_1 = 3$ and

$$A_L = \begin{bmatrix} 1 & 0 \\ 0 & \Psi(\theta) \end{bmatrix}.$$

Then depending on e_i^1 and $p_i = \sqrt{(e_i^2)^2 + (e_i^3)^2}$ there are three subcases: (a) $p_i = 0$; (b) $e_i^1 = 0$; (c) $e_i^1 \neq 0$, $p_i \neq 0$. The corresponding expressions for L_i' are: (a) $\{z\colon e_i^1 z^1 \leq 1\}$, a halfspace; (b) $\mathbb{R} \times p_i^{-1}\mathcal{B}^2$, a circular cylinder; (c) $\left\{z\colon \sqrt{(z^2)^2 + (z^3)^2} \leq p_i^{-1}(1 - e_i^1 z^1)\right\}$, a cone of revolution about the z^1 axis which has its vertex at $z^{\mathrm{T}} = [(e_i^1)^{-1}\ 0\ 0]$ and "opens" toward the origin. It is not possible, as it was with $q_1 = 2$, to obtain a simple representation for L'; up to M of the L_i' may be active in $\bigcap_{i=1}^M L_i'$. The geometric simplicity of the L_i' do allow easy construction of polyhedral approximations $L_i'' \subset L_i'$, which in turn provide a polyhedral approximation, $L'' = \bigcap_{i=1}^M L_i'' \subset L'$.

For a final example, assume $q_1 = 4$,

$$A_L = \begin{bmatrix} -I_2 & 0 \\ 0 & \Psi(1) \end{bmatrix},$$

$$e_1^{\mathrm{T}} = [1 \quad 1 \quad 0 \quad 1], \qquad e_2^{\mathrm{T}} = [1 \quad -1 \quad 0 \quad 1].$$

The upper block in A_L is cyclic while $\Psi(1)$ is noncyclic. It is easy to confirm that $L_1' = \{z\colon |z_1 + z_2| + \sqrt{(z^3)^2 + (z^4)^2} \leq 1\}$, $L_2' = \{z\colon |z_1 - z_2| + \sqrt{(z^3)^2 + (z^4)^2} \leq 1\}$. While L_1' and L_2' are unbounded $L' = L_1' \bigcap L_2'$ is compact.

We now apply the theorems to the following system

$$\begin{aligned} z(t+1) &= A_S z(t) + B_S w(t) + B_U u, \\ y(t) &= C_S z(t) + C_U u, \end{aligned} \tag{7.8}$$

where $z(t) \in \mathbb{R}^{q_2}$, the pair C_S, A_S is observable, A_S is asymptotically stable, $w(t) \in W$ and $u \in \mathbb{R}^{q_1}$ is constant. Subject to the constraint $y(t) \in Y$, we wish to determine the corresponding maximal invariant set: $O_\infty^Z(u) = \{z(0) \in \mathbb{R}^{q_2}\colon y(t) \in Y \ \forall t \in \mathbf{Z}^+ \text{ and } \forall w \in \mathcal{W}\}$. This can be done in the context of Sections 5 and 6 by defining $x(t) = z(t) - (I_{q_2} - A_S)^{-1} B_U u$ and replacing Y by $Y - \{C_S(I_{q_2} - A_S)^{-1} \times B_U u\}$. However, the computation of $O_\infty^Z(u)$ must then be repeated for each constant u.

An alternative approach is to form the augmented, Lyapunov stable system

$$\begin{aligned} \begin{bmatrix} u(t+1) \\ z(t+1) \end{bmatrix} &= \begin{bmatrix} I_{q_1} & 0 \\ B_U & A_S \end{bmatrix} \begin{bmatrix} u(t) \\ z(t) \end{bmatrix} + \begin{bmatrix} 0 \\ B_S \end{bmatrix} w(t), \\ y(t) &= [\, C_U \quad C_S \,] \begin{bmatrix} u(t) \\ z(t) \end{bmatrix}, \end{aligned} \tag{7.9}$$

and determine $O_\infty^A \subset \mathbb{R}^n$, $n = q_1 + q_2$, for this system. Since $u(t) = u(0)$ for all $t \in \mathbf{Z}^+$, it follows that $O_\infty^Z(u) = \{z \in \mathbb{R}^{q_2}\colon [u^{\mathrm{T}}\ z^{\mathrm{T}}]^{\mathrm{T}} \in O_\infty^A\}$, a "u-section" of O_∞^A.

By introducing the coordinate change

$$\begin{bmatrix} u \\ z \end{bmatrix} = Tx, \qquad T = \begin{bmatrix} I_{q_1} & 0 \\ (I_{q_2} - A_S)^{-1} B_U & I_{q_2} \end{bmatrix}, \tag{7.10}$$

(7.9) takes the form of (1.1), (1.2) where A, B, C are given by (7.1) with

$$A_L = I_{q_1}, \qquad C_L = C_U + C_S(I_{q_2} - A_S)^{-1} B_U, \tag{7.11}$$

and $D = 0$. Hence, the characterizations of O_∞ and $\hat{O}_\infty$ described above apply. Moreover,

$$O_\infty^A = T^{-1} O_\infty, \quad \hat{O}_\infty^A = T^{-1} \hat{O}_\infty, \quad T^{-1} = \begin{bmatrix} I_{q_1} & 0 \\ -(I_{q_2} - A_S)^{-1} B_U & I_{q_2} \end{bmatrix}. \tag{7.12}$$

The geometry of these transformations is simple. Figure 5 shows how O_∞ and $\hat{O}_\infty$ are mapped into O_∞^A and $\hat{O}_\infty^A$. Note that $O_\infty^Z(u) \neq \emptyset$ implies $F^S(u) = F^S + \{(I_{q_1} - A_S)^{-1} B_U u\} \subset O_\infty^Z(u)$. The finitely determined computation of $\hat{O}_\infty^A$ may be carried out entirely in terms of the u, z coordinates:

$$\hat{O}_\infty^A = O_\infty\left(\begin{bmatrix} I_{q_1} & 0 \\ B_U & A_S \end{bmatrix}, \begin{bmatrix} 0 \\ B_S \end{bmatrix}, \begin{bmatrix} I_{q_1} & 0 \\ C_U & C_S \end{bmatrix}, 0, W, L' \times Y\right). \tag{7.13}$$

Also from Theorem 7.2

$$\hat{O}_\infty^A = (L' \times \mathbb{R}^{q_2}) \bigcap O_\infty^A. \tag{7.14}$$

Thus, $O_\infty^Z(u) = \hat{O}_\infty^Z = \{z \in \mathbb{R}^{q_2}\colon [u^{\mathrm{T}}\ z^{\mathrm{T}}]^{\mathrm{T}} \in \hat{O}_\infty^A\}$ for all $u \in L'$.

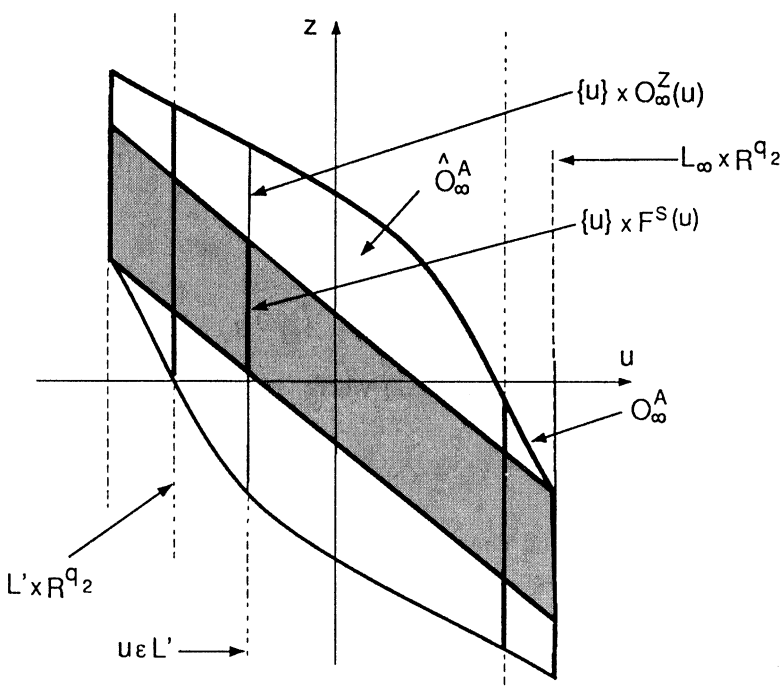

FIGURE 5 Sets O_∞^A and $\hat{O}_\infty^A$.

Since C_L is the static gain from u to z and $A_L = I_{q_2}$, L' has a nice interpretation. It is the set of u that produce equilibrium outputs belonging to Y'. The determination of a suitable Y' proceeds exactly as described in two paragraphs following the proof of Theorem 7.3. It depends only on Y, A_S, B_S, C_S.

A technicality has been neglected in the preceding analysis. System (7.9) may violate basic assumption (A2); with C_S, A_S observable (7.9) is observable if and only if $\operatorname{rank} C_L = q_1$. If $\operatorname{rank} C_L < q_1$ nothing is affected except the boundness of L_∞. Certainly, if L' is compact, the system data in (7.13) satisfy both (A1) and (A2) and $O_\infty^Z(u) = \hat{O}_\infty^Z(u)$ for all $u \in L'$.

The computation and characterization of $\hat{O}_\infty^Z(u)$ is particularly attractive when Y is polyhedral. Because of the special structure of (7.9) it is easy to confirm that $\hat{O}_\infty^A \neq \emptyset$ if and only if $0 \in \hat{O}_\infty^A$. Thus, Remark 6.3 holds and Algorithm 6.2 applies to the determination of $\hat{O}_\infty^A$. It stops in a finite number of steps and if $\hat{O}_\infty^A \neq \emptyset$ it produces $\hat{H}^U \in \mathbb{R}^{\hat{N} \times q_1}$, $\hat{H}^Z \in \mathbb{R}^{\hat{N} \times q_2}$, $\hat{r} \in \mathbb{R}^{\hat{N}}$ such that $\hat{O}_\infty^A = \{[u^{\mathrm{T}}\ z^{\mathrm{T}}] \in \mathbb{R}^n\colon \hat{H}^U u + \hat{H}^Z z \leq \hat{r}\}$. Thus, for all $u \in L'$, $\hat{O}_\infty^Z(u) = O_\infty^Z(u) = \{z \in \mathbb{R}^{q_2}\colon \hat{H}^Z z \leq \hat{r} - \hat{H}^U u\}$.

Example 7.1 The system (7.8) models an inverted pendulum, $\ddot{\theta} - \theta = \tau$, where τ is an equivalent applied torque (dc motor armature current) supplied by a zero order hold with a sample period of 0.1. The pendulum is stabilized by the feedback law $\tau(0.1t) = -k_1\theta(0.1t) - k_2\dot{\theta}(0.1t) + w(t) + (k_1 - 1)u$. Here, u is a constant input that specifies the equilibrium value of θ and $w(t)$ is a torque disturbance, unknown except that it belongs to $W = [-0.1, 0.1]$. The state $z(t)$ is defined by $z^1(t) = \theta(0.1t)$ and $z^2(t) = \dot{\theta}(0.1t)$. Controller saturation occurs when $|\tau(0.1t)| > 2$. The gains k_1 and k_2 are selected so that the continuous time closed-loop system has a damping ratio of 0.5 and a natural frequency of $\omega_n = 2.5$: $k_1 = 2.5^2$, $k_2 = 2.5$. Because the pendulum is open-loop unstable, loss of stability is likely if for some t, $\tau(0.1t) \notin [-2, 2]$. With the constraint $y(t) = \tau(0.1t) \in Y = [-2, 2]$, the sets $O_\infty^Z(u)$ define domains of attraction to the equilibrium angles $\theta = u$. Their determination begins with the computation of $\hat{O}_\infty^A$. Computing Y_t for large t shows that $Y_\infty \approx [-1.78, 1.78]$. Setting $Y' = [-1.608, 1.608]$ gives $L' = [-1.608, 1.608]$. Algorithm 6.2, when applied to the data

in (7.13), terminates with $t^* = 19$ and $\hat{O}_\infty^A$ defined by 42 non-redundant linear inequalities. Corresponding $O_\infty^Z(u)$ sections along with ellipsoidal outer approximations of $F^S = F^S(0)$ are shown in Figs. 6–8. Not surprisingly, the size of the $O_\infty^Z(u)$ decreases as $|u|$ becomes closer to 1.78, the approximate value of $|u|$ at which

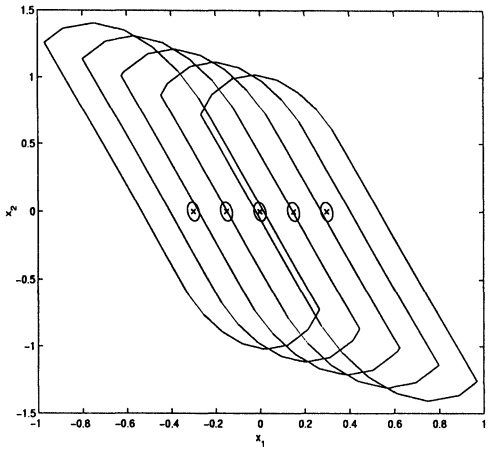

FIGURE 6 Sets $O_\infty^Z(u)$ in Example 7.1 for $u = -0.3, -0.15, 0, 0.15, 0.3$. Smaller sets are ellipsoidal outer approximations of F^S.

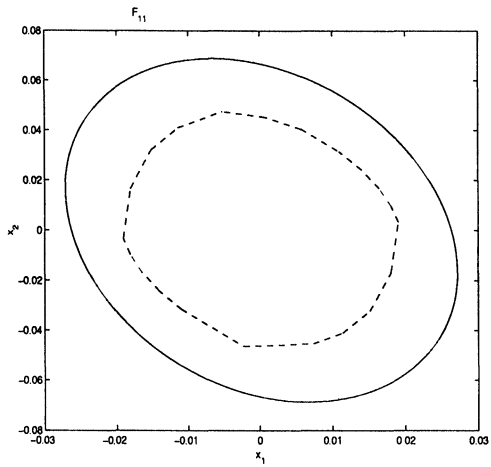

FIGURE 7 Comparison between the ellipsoidal outer approximation of F^S ($\gamma = 0.886$ and $S = 0$) used in Fig. 6 and an inner approximation of F^S given by F_{11}^S.

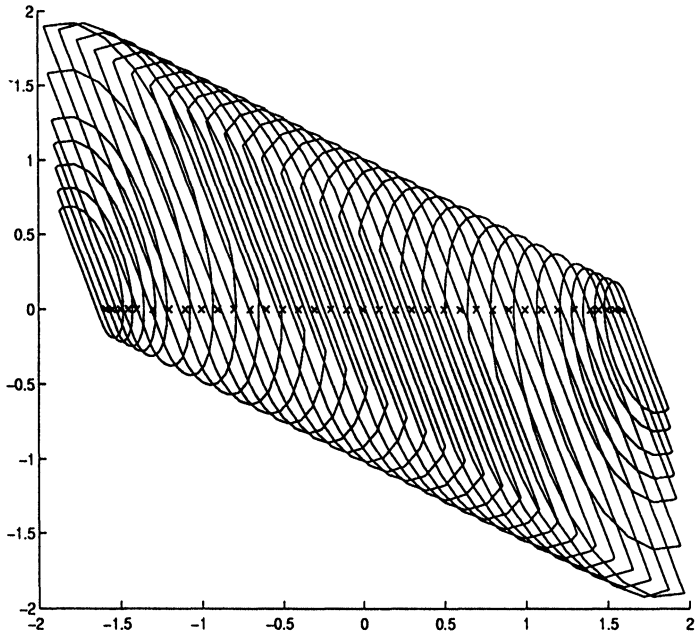

FIGURE 8 Sets $O_\infty^Z(u)$ in Example 7.1 for $u = -1.59, -1.55, -1.45, 1.45, 1.5, 1.55, 1.59$ and $0.1k$, $k = -14, \ldots, 14$.

$O_\infty^Z(u)$ becomes empty. The number of nonredundant linear inequalities required to define $O_\infty^Z(u)$ *increases* as $|u|$ increases. This increase in complexity illustrates the disadvantage of increasing the size of L' so that it closely approximates $L_\infty \approx [-1.78, 1.78]$; $\hat{O}_\infty^A$ becomes more complicated and the time required for its computation increases.

8 RESPONSE BOUNDING

It is of interest for asymptotically stable linear systems to characterize in a concrete way the state deviations generated by bounded inputs $w \in \mathcal{W}$. While F defines the set of all possible deviations, it defies explicit characterization and must therefore be replaced by suitable approximations. Ellipsoidal outer bounds for F can be generated by (3.5), as has been noted in Example 4.1. However, (3.5) provides no

information on the accuracy of bounds. If a polyhedral inner bound is known, such as F_t, procedures are available for constructing approximations and estimating their accuracy.

Let $F_I^* = \{x \in \mathbb{R}^n\colon p_i^{\mathrm{T}} x \le q_i,\ i = 1, \ldots, N^*\} \subset F$ be the polyhedral inner bound. It must, of course, be compact; assume further that $0 \in intF_I^*$. Suppose $F_0^* \supset F$ is a compact outer bound. Then, $F_I^* \subset F \subset F_0^* \subset \{x \in \mathbb{R}^n\colon p_i^{\mathrm{T}} x \le h_{F_0^*}(p_i),\ i = 1, \ldots, N^*\} \subset \alpha^* F_I^*$, where $\alpha^* = \max\{h_{F_0^*}(p_i)/q_i\colon i = 1, \ldots, N^*\} \ge 1$. Clearly, $\alpha^* - 1$ measures the approximation error for both the inner and outer bound.

Suppose F_0^* is ellipsoidal, confirmed to be an outer bound by using (3.5), (3.6) or some other procedure. Then there is a formula for $h_{F_0^*}(p_i)$ and the evaluation of α^* is trivial. If F_0^* is the intersection of several ellipsoids the computation of α^* is more complex but still possible: $h_{F_0^*}(p_i)$ is obtained by solving a convex programming problem – minimize $p_i^{\mathrm{T}} x$ subject to quadratic constraints on x. Thus, ellipsoidal bounds can be determined for complex systems, using computed values of α^* to judge the choices of γ and/or the number of intersecting ellipsoids. In Example 4.1 the single ellipsoid corresponds to $\gamma = 0.65$ and $\alpha^* = 1.45$. In Fig. 7, $F_I^* = F_{11}$ gives $\alpha^* = 1.54$.

Another bounding approach is to define $F_0^* = \alpha F_I^*$ and choose $\alpha = \alpha^*$ by minimizing α subject to $F \subset \alpha F_I^*$. This can be done algorithmically by testing $F \subset \alpha F_I^*$ and using bisection on α. The test for $F \subset \alpha F_I^*$ is based on Remark 5.2: $F \subset \alpha F_I^*$ if and only if $O_\infty(A, B, I_n, 0, W, \alpha F_I^*) \ne \emptyset$. For each α, Algorithm 6.2 determines whether or not $O_\infty \ne \emptyset$. The scheme works well, although the number of steps in Algorithm 6.2 and their complexity tend to increase as α approaches α^*. Applied to Example 4.1 with $F_I^* = F_5$ and α initially satisfying $1 \le \alpha \le 1.2$, applications of Algorithm 6.2 give $1.0354 \le \alpha^* \le 1.0364$. Thus, F_0^* is only about 3.6 percent larger than F_I^*. While this error measure is much smaller than the one obtained for the best ellipsoid, the ellipsoid has a computationally simpler representation.

Effectiveness of above procedures depends on the availability of polyhedral inner bounds which are fairly good approximations of F. Difficulties can occur in using $F_I^* \approx F_t$. If W is ellipsoidal and $m > 1$, F_t is neither ellipsoidal nor polyhedral and there is no completely satisfying way of generating good polyhedral approximations. The most obvious approach is to replace W by an inner polyhedral

approximation. When W is polyhedral there exists, in principle, an algorithm for generating the linear inequalities that define F_t. It involves computing the Minkowski sum of polyhedra by using Fourier elimination to project polyhedral sets on linear subspaces. (see [28,29]). Unfortunately, computational complexity grows rapidly with t and n. Certainly, these and other computational issues need further investigation.

There are connections between the O_∞ and the computation of operator norms for the input–output response of linear systems. We sketch the main ideas omitting some of the technical and computational details.

Let $|\cdot|^{\text{in}}$ and $|\cdot|^{\text{out}}$ denote, respectively, general norms on $\mathbb{R}^m$ and $\mathbb{R}^p$. For bounded input and output sequences, $w \in l_\infty^m$ and $y \in l_\infty^p$, the corresponding infinity norms are defined by $\|w\|_\infty^{\text{in}} = \sup\{|w(t)|^{\text{in}}: t \in \mathrm{Z}^+\}$ and $\|y\|_\infty^{\text{out}} = \sup\{|y(t)|^{\text{out}}: t \in \mathrm{Z}^+\}$. Let $\mathcal{L} : l_\infty^m \to l_\infty^p$ denote the input–output map of (1.1) and (1.2) with $x(0) = 0$. Its induced norm is $\|\mathcal{L}\| = \{\sup\{\|\mathcal{L}_w\|_\infty^{\text{out}}: \|w\|_\infty^{\text{in}} \le 1\} = \max\{|\theta|^{\text{out}}: \theta \in CF + DW\}$ where $W = \{\psi \in \mathbb{R}^m: |\psi|^{\text{in}} \le 1\}$.

Bounds on F, such as those discussed above, determine bounds on $\|\mathcal{L}\|$. Specifically,

$$\begin{aligned} &\max\{|Cx + D\psi|^{\text{out}}: x \in F_I^*, |\psi|^{\text{in}} \le 1\} \\ &\qquad \le \|\mathcal{L}\| \le \max\{|Cx + D\psi|^{\text{out}}: x \in F_0^*, \|\psi\|^{\text{in}} \le 1\}. \end{aligned} \tag{8.1}$$

For typical norms these bounds can be computed by formulas or by algorithmic optimization.

The upper bound provided by (3.5) is of particular interest because of its simplicity. Let P_γ be the solution of (3.5) with $S = 0$, μ be the spectral radius of A and $F_0^* = \{x: x^{\mathrm{T}} P_\gamma^{-1} x \le 1\}$. Then for $D = 0$, $|\psi|^{\text{in}} = \sqrt{\psi^{\mathrm{T}} R^{-1} \psi}$, $|\theta|^{\text{out}} = |\theta|_2$ and $\mu^2 < \gamma < 1$, it follows that $\|\mathcal{L}\| \le \max\{|\theta|_2: \theta \in CF_0^*\}$. Since $h_{CF_0^*}(\eta) = \sqrt{\eta^{\mathrm{T}} CP_\gamma C^{\mathrm{T}} \eta}$, $CF_0^* = \{\theta: \theta^{\mathrm{T}} (CP_\gamma C^{\mathrm{T}})^{-1} \theta \le 1\}$. Thus, $\|\mathcal{L}\| \le \inf\{\sqrt{\sigma_{\max}(\gamma)}: \mu^2 < \gamma < 1\}$ where $\sigma_{\max}(\gamma)$ is the maximum eigenvalue of $CP_\gamma C^{\mathrm{T}}$. Several techniques have been used to derive this bound and similar bounds for continuous-time systems (see, for example [13,24,34,41]). We prefer the preceding development because of its close, geometric connection with Theorem 2.4.

Alternatively, $\|\mathcal{L}\|$ may be bounded without bounding F. The key result is contained in the following theorem, which is not difficult to prove.

THEOREM 8.1 *Let* $\delta Y = \{\theta \in \mathbb{R}^p\colon |\theta|^{\text{out}} \leq \delta\}$ *and* $O_\infty^\delta = O_\infty(A, B, C, D, W, \delta Y)$. *Then* $O_\infty^\delta = \emptyset$ *for all* $0 < \delta < \|\mathcal{L}\|$ *and* $O_\infty^\delta \neq \emptyset$ *for all* $\delta \geq \|\mathcal{L}\|$.

Results in Section 6 imply that O_∞^δ is finitely determined, except possibly at $\delta = \|\mathcal{L}\|$. Thus, in principle, Algorithm 6.1 provides, through bisection on δ, a means for obtaining precise upper and lower bounds on $\|\mathcal{L}\|$. If $|\cdot|^{\text{out}}$ is either $|\cdot|_\infty$ or $|\cdot|_1$, δY is polyhedral and the advantages of Algorithm 6.2 may be exploited. Since the number of the algorithmic steps and their complexity tends to grow as δ nears $\|\mathcal{L}\|$, it is more efficient to use Algorithm 6.1 or 6.2 sparingly to find values of δ such that $\delta > \|\mathcal{L}\|$. Values of $\delta < \|\mathcal{L}\|$ are obtained with much less computational expense by testing $Y_t^\delta = \delta Y \sim DW \sim \sum_{k=0}^t CA^k BW = \emptyset$. Since $Y_t^\delta \to Y^\delta$, the accuracy of the bound increases as t increases. This approach reduces to the more usual formulas for computing convergent lower bounds on $\|\mathcal{L}\|$ [18].

Remark 8.1 The set O_∞^δ has another important function; it leads to a bound on $\|y\|_\infty^{\text{out}}$ that applies when $x(0) \neq 0$. Assume A, B is controllable and define $X = O_\infty^{\|\mathcal{L}\|}$. Since W and $\|\mathcal{L}\| Y$ are compact, symmetric, convex and contain the origin in their interiors, it follows from Theorem 5.2 and $0 \in intF$ that X has the same properties. Thus, the Minkowski distance functional $|x|^M = \inf\{\lambda\colon\ \lambda > 0,\ x \in \lambda X\}$ defines a norm on $\mathbb{R}^n$ and $X = \{x \in \mathbb{R}^n\colon\ |x|^M \leq 1\}$. From the definition of O_∞^δ it is clear that $\|y\|_\infty^{\text{out}} \leq \|\mathcal{L}\|$ holds not just for all $\|w\|_\infty^{\text{in}} \leq 1$ and $x(0) = 0$ but for all w and $x(0)$ such that $|x(0)|^M \leq 1$ and $\|w\|_\infty^{\text{in}} \leq 1$. Using the positive homogeneity of the norms,

$$\|y\|_\infty^{\text{out}} \leq \max\{\|\mathcal{L}\| \cdot \|w\|_\infty^{\text{in}},\ |x(0)|^M\}, \tag{8.2}$$

for all $w \in l_\infty^m$ and $x(0) \in \mathbb{R}^n$. In fact, there is no tighter bound on $\|y\|_\infty^{\text{out}}$ which applies for all $w \in l_\infty^m$ and $x(0) \in \mathbb{R}^n$. Bisection gives only approximate results and there is no guarantee that $O_\infty^{\|\mathcal{L}\|}$ is finitely determined. Thus, it is generally impossible to compute $\|\mathcal{L}\|$ and $|x|^M$. However, using bisection it is possible to obtain $\tilde{\delta}$ where

$\tilde{\delta} - \|\mathcal{L}\| > 0$ is small. Thus, $\tilde{\delta}$ and $\rho(x) = \inf\{\lambda\colon \lambda > 0,\ x \in \lambda O_\infty^{\tilde{\delta}}\}$ are close upper approximations of $\|\mathcal{L}\|$ and $|x|^M$.

9 A MULTIMODE CONTROLLER

Conflicting requirements often arise in the design of regulators for systems which are subject to hard constraints on state and control variables. Fast response and good disturbance rejection demand high loop gain, but high gain in turn reduces the extent of the constraint-admissible domain of attraction. Multimode regulators that exploit logic-based controller switching, have been proposed as a means for resolving this conflict [31,42,43]. An indexed family of controllers is designed with ascending loop gains. For each controller there is a maximal invariant set which defines a constraint-admissible domain of attraction. The switching logic chooses the highest level controller whose invariant set contains the current state. Under appropriate nesting conditions on the invariant sets, the highest gain controller is ultimately selected. Further, stable operation is achieved for any initial state in the union of *all* the invariant sets.

Here, an alternative plan for generating the family of controllers is considered. Loop gain is *fixed* and the controllers are determined by a selection of constant input biases. While the general ideas of [31] still apply, the resulting conditions and treatment of controller ordering is quite different. See [14] for closely related ideas and a complex application in robotics. In the approach considered here, results from Section 7 ease the design process and simplify the implementation of the switching logic.

Let (7.8) model the closed-loop regulator system with disturbance input $w(t) \in W$, constraints $y(t) \in Y$ and bias input u. Related, pertinent notations are defined in Section 7. With $u = 0$ the desired regulation takes place in a neigborhood of $z(t) = 0$, i.e., $z(t)$ tends to F^S. It is assumed that $O_\infty^A \neq \emptyset$ so that the sections $O_\infty^Z(u) = \{z \in \mathbb{R}^{q_2}\colon [u^{\mathrm{T}}\ z^{\mathrm{T}}]^{\mathrm{T}} \in \hat{O}_\infty^A\}$ are nonempty and can be computed for values of u in L'.

The family of controllers is defined by $u = u_i \in L'$, $i \in J$, where J is a finite index set and $u_i = 0$ for $i = i_0 \in J$. For $z \in \bigcup_{i \in J} O_\infty^Z(u_i)$, define $I(z) = \{i \in J\colon z \in O_\infty^Z(u_i)\}$. The controller choice at time t, $i(t)$, is

required to satisfy the constraint $i(t) \in I(z(t))$; d-invariance of $O_\infty^Z(u_{i(t)})$ then implies $z(t+1) \in O_\infty^Z(u_{i(t)})$ and $y(t+1) \in Y$. Thus, $z(0) \in \bigcup_{i \in J} O_\infty^Z(u_i)$ guarantees that $y(t) \in Y$ for all $t \in \mathrm{Z}^+$.

The switching logic chooses a specific $i(t) \in I(z(t))$ in such a way that $i(t)$ ultimately equals i_0. The required nesting conditions are based on an obvious generalization of Remark 4.1. Given any $\epsilon > 0$ there exists a $\tau > 0$ such that for all $t \in \mathrm{Z}^+$ and for all $z(t) \in O_\infty^Z(u)$ it follows that $z(t+\tau) \in F^S(u) + \epsilon \mathcal{B}^{q_2}$. Suppose $F^S(u_i) \subset int O_\infty^Z(u_j)$. Then, within a fixed time τ_i, any state in $O_\infty^Z(u_i)$ will arrive in $O_\infty^Z(u_j)$. The required nesting condition simply states that for every $i \in J$ there exists a chain of such linking relations (called *prepares* relations in [14]) which leads from $O_\infty^Z(u_i)$ to $O_\infty^Z(u_0)$.

Since there may be many chains leading from $O_\infty^Z(u_i)$ to $O_\infty^Z(u_0)$, there may be many acceptable strategies for choosing $i(t) \in I(z(t))$. The following strategy is based on chains of minimum length and emphasizes, therefore, rapid decrease of $i(t)$. Let N(i) denote the minimum length of all chains leading from $O_\infty^Z(u_i)$ to $O_\infty^Z(u_0)$ and define $M(z) = \min\{N(j): j \in I(z)\}$. Pick $i(t)$ so that it satisfies

$$\begin{aligned} i(t) &= i(t-1) \quad \text{if } M(z(t)) = M(z(t-1)), \\ i(t) &\in \{j: j \in I(z(t)), N(j) = M(z(t))\} \quad \text{if } M(z(t)) \neq M(z(t-1)). \end{aligned} \tag{9.1}$$

Then for all $z(0) \in \bigcup_{i \in J} O_\infty^Z(u_i)$, the sequence $\{i(t): t \in \mathrm{Z}^+\}$ is nonincreasing. Moreover, if $z(0) \notin O_\infty^Z(u_0)$ there exists a $t_0 \in \mathrm{Z}^+$ such that $N(i(t)) > 0$ for $t < \tau$ and $N(i(t)) = N(i_0) = 0$ for all $t \geq t_0$. Downward jumps in $i(t)$ may exceed one, since $O_\infty^Z(u_i) \bigcap O_\infty^Z(u_j) \neq \emptyset$ is possible when $O_\infty^Z(u_i)$ is not linked to $O_\infty^Z(u_j)$.

If Y is polyhedral the implementation of the switching logic is particularly simple. Using the notations in Section 7, $I(z) = \{i \in J: \hat{H}^Z z \leq \hat{r}_i\}$, where $\hat{r}_i = \hat{r} - \hat{H}^U u_i$. Thus, testing for $i \in I(z)$ is easy. When the nesting structures are relatively simple it is often possible to determine a formula for $N(j)$, thus speeding evaluation of $M(z)$.

The system in Example 7.1 illustrates the preceding ideas. Figure 6 shows pairs of $O_\infty^Z(u_i)$ and ellipsoidal outer approximations of $F^S(u_i)$ for $u_{-2} = -0.3$, $u_{-1} = -0.15$, $u_0 = 0$, $u_1 = 0.15$, $u_2 = 0.3$. The conditions, $F^S(u_i) \subset O_\infty^Z(u_{i+1})$ for $i = -2, -1$, and $F^S(u_i) \subset O_\infty^Z(u_{i-1})$ for

$i=2,1$ are satisfied and meet the requirement that each $O_\infty^Z(u_i)$ is chained to $O_\infty^Z(u_0)$. Spacing between the u_i can be increased somewhat at the possible expense of having $z(t)$ stay longer in each set. Many transitions in $i(t)$ are possible; for example, $i(t)=-2$ and $O_\infty^Z(u_{-2}) \bigcap O_\infty(u_j)^Z \neq \emptyset$, for $j=-1,0,1,2$, imply the existence of four outcomes, $i(t+1)=-2,-1,0,1$. Outcome $i(t+1)=2$ is excluded by (9.1); if this outcome were possible, cycling between $i=2$ and $i=-2$ might occur. The minimal chain length is $N(i)=|i|$. By increasing the number of elements in J from 5, $\bigcup_{i\in J} O_\infty^Z(u_i)$ can be extended to cover more of area described by Fig. 8. The nesting pattern and other results remain the same although spacing of u_i must be closer for larger $|u_i|$. Since the number of active inequalities required to define $O_\infty^Z(u_i)$ increases with $|u_i|$, the determination of $I(z)$ becomes more complex. In any case, it is clear that multimode control significantly enlarges the safe domain of attraction.

Generalizations of the multimode approach are possible. For systems where the chaining structures are simple, such as in the preceding example, u can be allowed to take on *all* values in L'. Specifically, $u(t)$ is determined by minimizing $|u|$ subject to $\hat{H}^U u \leq \hat{r} - \hat{H}^Z z(t)$. Using results from the theory of reference governors [22] it can be shown there exists a $t_0 \in \mathbf{Z}^+$ such that for all $z(0) \in \bigcup_{u\in L'} O_\infty^Z(u)$, $\{|u(t)|: t\in \mathbf{Z}^+\}$ is nonincreasing and $u(t)=0$ for all $t \geq t_0$. Alternatively, a family of controllers may be formed by selecting both input biases and loop gains. This increases the variety of constraint-admissible invariant sets and possibilities for linking them in more ways.

References

[1] V.I. Arnold, *Mathematical Methods of Classical Mechanics*, Springer, 1987.

[2] J.P. Aubin, *Applied Abstract Analysis*, Wiley-Interscience, 1977.

[3] J.P. Aubin, *Viability Theory*, Birkhauser, 1991.

[4] D.P. Bertsekas and I.B. Rhodes, "On the minimax reachability of target sets and target tubes," *Automatica*, **7** (1971) 233–247.

[5] D.P. Bertsekas, "Infinite-time reachability of state-space regions by using feedback control," *IEEE Transactions on Automatic Control*, **AC-17** (1972) 604–613.

[6] G. Bitsoris, "Positively invariant polyhedral sets of discrete-time linear systems," *International Journal of Control*, **47** (1988) 1713–1726.

[7] G. Bitsoris, "On positive invariance of polyhedral sets for discrete-time systems," *System and Control Letters*, **11** (1988) 243–248.

[8] F. Blanchini, "Control synthesis for discrete time linear systems with control and state bounds in the presence of disturbances," *Journal of Optimization Theory and Applications*, **65** (1990) 29–37.

[9] F. Blanchini, "Feedback control for linear time-invariant systems with state and control bounds in the presence of disturbances," *IEEE Transactions on Automatic Control*, **35** (1990) 1231–1234.

[10] F. Blanchini, "Constrained control for perturbed linear systems," *Proceedings of the 29th IEEE Conference on Decision and Control*, 1990, pp. 3464–3467.

[11] F. Blanchini, "Constrained control for systems with unknown disturbances," *Control and Dynamic Systems*, **51** (1992) 130–182.

[12] F. Blanchini, "Ultimate boundness control for uncertain discrete-time systems via set-induced Lyapunov functions," *IEEE Transactions on Automatic Control*, **39** (1994) 428–433.

[13] S. Boyd, L.E. Ghaoui, E. Feron and V. Balakrishnan, *Linear Matrix Inequalities in Systems and Control Theory*, Society of Industrial and Applied Mathematics, 1994.

[14] R.R. Burridge, A.A. Rizzi and D.E. Koditchek, "Sequential composition of dynamically dexterous robot behaviours," *International Journal of Robotics Research* (to appear).

[15] M.C. Delfour and S.K. Mitter, "Reachability of perturbed systems and min sup problems," *SIAM Journal on Control*, **7** (1969) 521–533.

[16] V.F. Demyanov and A.M. Rubinov, *Foundations of Nonsmooth Analysis and Quasidifferential Calculus*, Nauka, Moscow, 1990, pp. 124–125 (in Russian).

[17] E. De Santis, "On positively invariant sets for discrete time linear systems with disturbance: an application of maximal disturbance sets," *IEEE Transactions on Automatic Control*, **39** (1994) 245–249.

[18] A.C. Desoer and M. Vidyasagar, *Feedback systems: Input–output properties*, Academic Press, New York, 1975.

[19] E.G. Gilbert and K.T. Tan, "Linear systems with state and control constraints: the theory and applications of maximal output admissible sets." *IEEE Transactions on Automatic Control*, **36** (1991) 1008–1020.

[20] E.G. Gilbert, I. Kolmanovsky and K.T. Tan, "Nonlinear control of discrete-time linear systems with state and control constraints: A reference governor with global convergence properties," *Proceedings of the 33rd IEEE Conference on Decision and Control*, 1994, pp. 144–149.

[21] E.G. Gilbert, I. Kolmanovsky and K.T. Tan, "Discrete time reference governors and the nonlinear control of systems with state and control constraints," *International Journal of Robust and Nonlinear Control*, **5** (1995) 487–504.

[22] E.G. Gilbert and I. Kolmanovsky, "Fast reference governors for systems with state and control constraints and disturbance inputs," *Proceedings of the 34th IEEE Conference on Decision and Control*, 1995, pp. 1189–1194.

[23] J.D. Glover and F.C. Schweppe, "Control of linear dynamic systems with set constrained disturbances," *IEEE Transactions on Automatic Control*, **AC-16** (1971) 411–423.

[24] W.M. Haddad and V.S. Chellaboina, "Mixed-norm H_2/L_1 controller synthesis via fixed-order dynamic compensation: A Riccati equation approach," Technical Report, School of Aerospace Engineering, Georgia Institute of Technology, 1997.

[25] H. Hadwiger, *Vorlesungen über Inhalt, Oberflaäche und Isoperimetrie*, Springer, Berlin, 1957.

[26] O. Hajek, *Pursuit Games*, Academic Press, London, 1975.

[27] G. Hnyilicza, *A Set-Theoretic Approach to State Estimation*, M.S. Thesis, Department of Electrical Engineering, Mass. Inst. of Tech., 1969.

[28] S.S. Keerthi and E.G. Gilbert, "Computation of minimum-time feedback control laws for discrete-time systems with state-control constraints," *IEEE Transactions on Automatic Control*, **AC-32** (1987) 432–435.

[29] S.S. Keerthi and K. Sridharan, "Solution of parametrized linear inequalities by Fourier elimination and its applications," *Journal of Optimization Theory and Applications*, **65** (1990) 161–169.

[30] I. Kolmanovsky and E.G. Gilbert, "Maximal output admissible sets for discrete-time systems with disturbance inputs," *Proceedings of the American Control Conference*, 1995, pp. 1995–2000.

[31] I. Kolmanovsky and E.G. Gilbert, "Multimode controllers for regulation in systems with state and control constraints and disturbance inputs," *Proceedings of the Block Island Workshop on Control Using Logic-Based Switching*, 1996, pp. 104–117, Lecture Notes in Control and Information Systems, Springer.

[32] N.N. Krasovskii and A.I. Subbotin, *Game-Theoretical Control Problems*, Nauka, Moscow, 1974 (in Russian); translated in 1988, Springer, New York.

[33] R.H. Middleton and G.C. Goodwin, *Digital Control and Estimation: A Unified Approach*, pp. 435–441, 1990, Prentice Hall.

[34] K. Nagpal, J. Abedor and K. Poola, "An LMI approach to peak-to-peak gain minimization: Filtering and control," *Proceedings of the American Control Conference*, 1994, pp. 742–746.

[35] L.S. Pontryagin, "Linear differential games," *Soviet Math. Dokl.*, **8**, (1967) 769–771.

[36] E.E.M. Rechtschaffen, "Unique winning policies for linear differential pursuit games," *Journal of Optimization Theory and Applications*, **29** (1979) 629–658.

[37] R.T. Rockafellar, *Convex Analysis*, Princeton University Press, 1972.

[38] W.J. Rugh, *Linear Systems Theory*, 2nd Edition, Prentice Hall, 1996.

[39] R. Schneider, *Convex Bodies: the Brunn-Minkowski Theory*, Cambridge University Press, 1993.

[40] F.C. Schweppe, *Uncertain Dynamical Systems*, Prentice-Hall, 1973.

[41] M. Sznaier, M. Holmes and J. Bu, "Mixed H_2/L_1 control with low order controllers: A linear matrix inequality approach," *Proceedings of the 34th Conference on Decision and Control*, 1995, pp. 1352–1357.

[42] K.T. Tan, Maximal Output Admissible Sets and the Nonlinear Control of Linear Discrete-Time Systems with State and Control Constraints, Ph.D dissertation, Department of Aerospace Engineering, the University of Michigan, 1991.

[43] K.T. Tan, "Multimode controllers for linear discrete-time systems with general state and control constraints," *Optimization: Techniques and Applications*, World Scientific Publishing Company, 1992, pp. 433–442.

[44] M. Vassilaki, J.C. Hennet and G. Bitsoris, "Feedback control of linear discrete-time systems under state and control constraints," *International Journal on Control*, **47**, (1988) 1727–1735.

[45] W.M. Wonhom, *Linear Multivariable Control: A Geometric Approach*, 2nd Edition, Springer-Verlag, 1974.