Hindawi Publishing Corporation
Mathematical Problems in Engineering
Volume 2012, Article ID 465853, 11 pages
doi:10.1155/2012/465853

Research Article

Probabilistic Approach to System Reliability of Mechanism with Correlated Failure Models

Xianzhen Huang and Yimin Zhang

School of Mechanical Engineering and Automation, Northeastern University, Shenyang 110004, China

Correspondence should be addressed to Xianzhen Huang, xzhhuang83@gmail.com

Received 15 December 2011; Revised 22 February 2012; Accepted 6 March 2012

Academic Editor: Xue-Jun Xie

In this paper, based on the kinematic accuracy theory and matrix-based system reliability analysis method, a practical method for system reliability analysis of the kinematic performance of planar linkages with correlated failure modes is proposed. The Taylor series expansion is utilized to derive a general expression of the kinematic performance errors caused by random variables. A proper limit state function (performance function) for reliability analysis of the kinematic performance of planar linkages is established. Through the reliability theory and the linear programming method the upper and lower bounds of the system reliability of planar linkages are provided. In the course of system reliability analysis, the correlation of different failure modes is considered. Finally, the practicality, efficiency, and accuracy of the proposed method are shown by a numerical example.

1. Introduction

Mechanisms are the skeletons of modern mechanical products and devices. The kinematic accuracy of mechanisms greatly influences the performance and reliability of the mechanical products and devices. Traditionally, in mechanism synthesis, a designer often tries to choose proper mechanism configurations and component dimensions to make the designed mechanism meet prespecified requirements. However, in the physical realization of any constituent member, primary errors always occur due to technological features of production. Once a theoretical solution is translated into physical reality, a theoretically feasible mechanism might be unable to meet practical requirements because of the effects of uncertain factors (e.g. manufacturing tolerances, elastic deformations and joint clearances). Since these uncertain factors are inevitable, it is necessary to build a proper mode to quantify the effects of the uncertain factors on the accuracy of mechanisms and optimally allocate the working ranges of the mechanisms [1–3].

In recent years, with the continual increase of the demands of consumers on the kinematic and dynamic performance of mechanical products, the theory of mechanical reliability

is more and more widely applied in mechanism analysis and synthesis. Mechanism reliability can simply be defined as the capability that a mechanism performs its prespecified movement accurately, timely, and coordinately throughout its lifetime. Based on the analysis of the sources of original errors, Sergeyev [4] clarified the main failure modes of mechanisms and presented an analytical method for reliability analysis of mechanisms preliminarily. Subsequently, there have been various attempts to derive the reliability of the kinematic and dynamic accuracy of mechanisms, such as the linear regression method [5], the mean value first-order second-moment method [6], the advanced first-order second-moment method [7], the hybrid dimension reduction method [8], and the Monte-Carlo simulation method [9].

As shown in practical engineering, most performance deficiencies of mechanical products are found in the stage of systematic analysis, therefore it's important to build a proper system reliability analysis model to evaluate the performance quality of mechanical equipments and products. Recently, Zhang et al. [9] studied the method for system reliability analysis of mechanisms without considering the interactions of failure modes. However, to the best of the authors' knowledge, system reliability analysis of mechanisms with correlated failure modes has not been reported yet. Combining the mechanism theory and system reliability analysis method, this paper proposes a general method for system reliability analysis of planar mechanisms with correlated failure modes.

2. Reliability Analysis for Kinematic Performance of Planar Linkages

The kinematic performance function of planar linkages can be expressed as [10]

$$\mathbf{Q} = \mathbf{Q}(\mathbf{V}, \mathbf{L}, \mathbf{U}), \tag{2.1}$$

where $\mathbf{Q}_{s\times 1}$ is the performance parameter vector. For example, for a function generator, $\mathbf{Q}_{s\times 1}$ may be referred to the positions of the output link, and for a path generator, it may be the coordinates of a point on the output link. $\mathbf{V}_{m\times 1}$ is the input (independent) variable vector, $\mathbf{L}_{p\times 1}$ is the effective dimension variable vector, and $\mathbf{U}_{n\times 1}$ is the output (dependent) variable vector which can be obtained by solving the loop closure equations of planar linkages

$$\mathbf{F}(\mathbf{L}, \mathbf{U}, \mathbf{V}) = \mathbf{0}. \tag{2.2}$$

The performance errors of the mechanism under consideration can be obtained as

$$\Delta\mathbf{Q} = \frac{\partial\mathbf{Q}}{\partial\mathbf{L}^T}\Delta\mathbf{L} + \frac{\partial\mathbf{Q}}{\partial\mathbf{U}^T}\Delta\mathbf{U} + \frac{\partial\mathbf{Q}}{\partial\mathbf{V}^T}\Delta\mathbf{V}, \tag{2.3}$$

where $\partial\mathbf{Q}/\partial\mathbf{L}^T$, $\partial\mathbf{Q}/\partial\mathbf{U}^T$ and $\partial\mathbf{Q}/\partial\mathbf{V}^T$ are Jacobian matrices, whose values are got at the mean values of the random variables. $\Delta\mathbf{L}_{p\times 1}$, $\Delta\mathbf{U}_{n\times 1}$, and $\Delta\mathbf{V}_{m\times 1}$ are the tolerance vectors of random design variables. $\Delta\mathbf{V}_{m\times 1}$ and $\Delta\mathbf{L}_{p\times 1}$ are determined by several objective factors such as the machining accuracy, the assembly accuracy and the operation precision. From (2.3), $\Delta\mathbf{U}_{n\times 1}$ can be obtained:

$$\Delta\mathbf{U} = -\left[\frac{\partial\mathbf{F}}{\partial\mathbf{U}^T}\right]^{-1}\left(\frac{\partial\mathbf{F}}{\partial\mathbf{V}^T}\Delta\mathbf{V} + \frac{\partial\mathbf{F}}{\partial\mathbf{L}^T}\Delta\mathbf{L}\right). \tag{2.4}$$

A limit state is defined as a condition in which a mechanism becomes unsuitable for its intended motion (i.e., a violation of the serviceability limit state). The corresponding limit state functions (performance functions) when the mechanism meets the requirements of the upper and lower limits are

$$\begin{aligned} \mathbf{g}_U(\mathbf{X}) &= \boldsymbol{\varepsilon} - \Delta\mathbf{Q} = \boldsymbol{\varepsilon} - \mathbf{J}\Delta\mathbf{X}, \\ \mathbf{g}_L(\mathbf{X}) &= \Delta\mathbf{Q} + \boldsymbol{\varepsilon} = \mathbf{J}\Delta\mathbf{X} + \boldsymbol{\varepsilon}, \end{aligned} \tag{2.5}$$

where

$$\mathbf{J} = \left[\frac{\partial \mathbf{Q}}{\partial \mathbf{V}^T} - \frac{\partial \mathbf{Q}}{\partial \mathbf{U}^T} \left(\frac{\partial \mathbf{F}}{\partial \mathbf{U}^T} \right)^{-1} \frac{\partial \mathbf{F}}{\partial \mathbf{V}^T}, \ \frac{\partial \mathbf{Q}}{\partial \mathbf{L}^T} - \frac{\partial \mathbf{Q}}{\partial \mathbf{U}^T} \left(\frac{\partial \mathbf{F}}{\partial \mathbf{U}^T} \right)^{-1} \frac{\partial \mathbf{F}}{\partial \mathbf{L}^T} \right]. \tag{2.6}$$

$\mathbf{g}_U$ and $\mathbf{g}_L$ are called the upper and lower limit state functions, $\mathbf{X} = [V_1, \ldots, V_m, L_1, \ldots, L_p]^T$ is the basic variables, $\boldsymbol{\varepsilon}$ is the allowable errors, and $\Delta\mathbf{X} = [\Delta V_1, \ldots, \Delta V_m, \Delta L_1, \ldots, \Delta L_p]^T$ are used to represent the random error vector of basic variables.

The kinematic reliability of a mechanism is the probability that the mechanism realizes its required motion within a specified tolerance limit. The lower limit reliability of the kth dependent variable, Q_k, is defined as:

$$R_L^{(k)} = \int_{g_L^{(k)}(\mathbf{X})>0} f(\mathbf{X}) \mathrm{d}\mathbf{X}, \tag{2.7}$$

where $f(\mathbf{X})$ is the joint probability density function of multidimensional basic random variables, $\mathbf{X}$ and $g_L^{(k)}(\mathbf{X}) = \Delta Q_k + \varepsilon_k = \mathbf{J}_k \Delta\mathbf{X} + \varepsilon_k$ is the limit state function of the kth dependent variable, Q_k. Note that $\mathbf{J}_k$ is the kth row of matrix $\mathbf{J}$.

The mean value, $\mu_L^{(k)}$, and variance, $(\sigma_L^{(k)})^2$, of the limit state function, $g_L^{(k)}(\mathbf{X})$, can be expressed as

$$\begin{aligned} \mu_L^{(k)} &= E\left[g_L^{(k)}(\mathbf{X})\right] = \mathbf{J}_k E(\Delta\mathbf{X}) + \varepsilon_k, \\ \left(\sigma_L^{(k)}\right)^2 &= \mathrm{Var}\left[g_L^{(k)}(\mathbf{X})\right] = \mathbf{J}_k^{[2]} \mathrm{cs}(\mathrm{Cov}(\Delta\mathbf{X})), \end{aligned} \tag{2.8}$$

where $E(\Delta\mathbf{X})$ and $\mathrm{Cov}(\Delta\mathbf{X})$ are the mean value vector and covariance matrix of primary errors, respectively, $\mathbf{J}_k$ is the kth row of matrix $\mathbf{J}$, $(\cdot)^{[2]} = (\cdot) \otimes (\cdot)$ is the second-order Kronecker power of $(\cdot)$, and $\otimes$ represents Kronecker product [11]

$$\mathbf{A}_{p\times q} \otimes \mathbf{B}_{s\times t} = \begin{bmatrix} a_{11}\mathbf{B} & a_{12}\mathbf{B} & \ldots & a_{1q}\mathbf{B} \\ a_{21}\mathbf{B} & a_{22}\mathbf{B} & \ldots & a_{2q}\mathbf{B} \\ \vdots & \vdots & \ddots & \vdots \\ a_{p1}\mathbf{B} & a_{p2}\mathbf{B} & \ldots & a_{pq}\mathbf{B} \end{bmatrix}_{ps\times qt}, \tag{2.9}$$

$\mathrm{cs}(\cdot)$ is the column string of $(\cdot)$, the column sequence

$$\mathrm{cs}\left(\mathbf{A}_{p\times q}\right) = \sum_{j=1}^{q}\left(\mathbf{e}_{q\times 1}^{j} \otimes \mathbf{I}_{p\times p}\right)\mathbf{A}_{p\times q}\mathbf{e}_{q\times 1}^{j}, \tag{2.10}$$

where $\mathbf{I}_{p\times p}$ is identity matrix with $p \times p$ dimensions, and $\mathbf{e}_{q\times 1}^{j}$ is the jth elementary vector with $q \times 1$ dimensions, all zeros except 1 in the jth position.

In the mechanism literature, the distribution of the random variables is always assumed independent normal [4–8]. The distance from the "minimum" tangent plane to the failure surface may be used to approximate the actual failure surface, and the reliability index of the ith output variable is defined as:

$$\beta_L^{(k)} = \frac{\mu_L^{(k)}}{\sigma_L^{(k)}}, \tag{2.11}$$

which can be used to reflect the position (the distance from the original point) and dispersion degree of the safety margin. When the primary errors are normally and independently distributed, the unary estimator of the kinematic performance reliability of planar linkages is represented as follows:

$$R_L^{(k)} = \Phi\left(\beta_L^{(k)}\right), \tag{2.12}$$

where $\Phi(\cdot)$ is the standard normal distribution function.

The correlation coefficient between performance functions $g_L^{(k)}$ and $g_L^{(t)}$ is

$$\mathrm{Cov}\left(g_L^{(k)}, g_L^{(t)}\right) = E\left[\left(g_L^{(k)} - \overline{g}_L^{(k)}\right)\left(g_L^{(t)} - \overline{g}_L^{(t)}\right)\right] = \sum_{i=1}^{m+l}\sum_{j=1}^{m+l}\frac{\partial g_L^{(k)}}{\partial X_i}\frac{\partial g_L^{(t)}}{\partial X_j}\mathrm{Cov}\left(X_i, X_j\right). \tag{2.13}$$

The correlation coefficient between performance functions $g_L^{(k)}$ and $g_L^{(t)}$ is

$$\rho_L^{(k,t)} = \frac{\mathrm{Cov}\left(g_L^{(k)}, g_L^{(t)}\right)}{\sqrt{\mathrm{Var}\left(g_L^{(k)}\right)\mathrm{Var}\left(g_L^{(t)}\right)}}. \tag{2.14}$$

Then the joint reliability of $g_L^{(k)}$ and $g_L^{(t)}$ can be estimated by the joint normal distribution function:

$$\begin{aligned} R_L^{(k,t)} &= 1 - \iint_{-\infty}^{0} f_{kt}\left(g_L^{(k)}, g_L^{(t)}\right) d g_L^{(k)} d g_L^{(t)} = 1 - \int_{-\infty}^{-\beta_L^t}\int_{-\infty}^{-\beta_L^k} \phi_L^{(k,t)}(u,v)\,\mathrm{d}u\,\mathrm{d}v \\ &= 1 - \int_{-\infty}^{-\beta_L^t} \Phi\left[\frac{-\beta_L^k - \rho_L^{(k,t)} v}{\sqrt{1 - \left(\rho_L^{(k,t)}\right)^2}}\right]\phi(v)\,\mathrm{d}v, \end{aligned} \tag{2.15}$$

where

$$f_{kt}\left(g_L^{(k)}, g_L^{(t)}\right) = \frac{1}{2\pi\sigma_L^{(k)}\sigma_L^{(t)}\sqrt{\left[1-\left(\rho_L^{(k,t)}\right)^2\right]}} \times \exp\left\{-\frac{1}{2\left[1-\left(\rho_L^{(k,t)}\right)^2\right]}\left[\frac{\left(g_L^{(k)}-\mu_L^{(k)}\right)^2}{\mathrm{Var}\left(g_L^{(k)}\right)} - 2\rho_L^{(k,t)}\frac{\left(g_L^{(k)}-\mu_L^{(k)}\right)\left(g_L^{(t)}-\mu_L^{(t)}\right)}{\sigma_L^{(k)}\sigma_L^{(t)}} + \frac{\left(g_L^{(t)}-\mu_L^{(t)}\right)^2}{\mathrm{Var}\left(g_L^{(t)}\right)}\right]\right\} \tag{2.16}$$

is the joint PDF of $g_L^{(k)}$ and $g_L^{(t)}$.

In the same way, the reliability corresponding to each failure modes and the joint reliability between each two failure modes while the mechanism satisfies the upper limits could be obtained. Then the reliability corresponding to each failure model and the joint reliability between two failure models while the mechanism meets the upper and lower limits can be derived as

$$\begin{aligned} R^k &= R_L^{(k)} + R_U^{(k)} - 1, \\ R^{(k,t)} &= R_L^{(k,t)} + R_U^{(k,t)} - 1. \end{aligned} \tag{2.17}$$

3. System Reliability of Linkage Performance

For convenience system reliability analysis of structures with multi-failure modes is often performed by consuming that the failure modes are independent between each other. In most cases, however, the failure modes of a mechanism (e.g., the position and pose of a rigid-body guidance mechanism) are correlated. Consequently, it is of great meaning to propose an accurate and efficient system reliability analysis method to evaluate the working state of the mechanism. Ditlevsen [12] presented the well-known "narrow bounds theory" for computing system reliability. The correlation between each of the two failure modes is considered in Ditlevsen's method, making it more physically reasonable. And then the bounds method in which the system reliability is estimated by computing the bound values developed continuously and received wide acceptance [13–15]. In this section, a practical method for system reliability analysis of mechanisms is proposed by using the linear programming.

Linear programming solves the problem of minimizing or maximizing a linear function, whose variables are subject to linear equality and inequality constraints. And the linear programming for solving the possible bounds on the system reliability of linkages can be presented as follows:

$$\begin{aligned} \min(\max) \quad & \mathbf{c}^T\mathbf{p} \\ \text{s.t.} \quad & \mathbf{a}_1\mathbf{p} = \mathbf{b}_1 \\ & \mathbf{a}_2\mathbf{p} \geq \mathbf{b}_2, \end{aligned} \tag{3.1}$$

where $\mathbf{p}$ is the design variable vector of the linear programming, $\mathbf{c}$ is a vector of coefficients, $\mathbf{c}^T\mathbf{p}$ is the linear objective function, and $\mathbf{a}_1$, $\mathbf{a}_2$, $\mathbf{b}_1$, and $\mathbf{b}_2$ are the coefficient matrices and vectors that represent the equality and inequality constraints, respectively.

In the proposed system reliability analysis method, the kinematic failure space of a mechanism can be divided into 2^n mutually exclusive and collectively exhaustive (MECE) events according to the number of failure modes, n. Typically, for a system with three failure modes, the performance sample space can be depicted as Figure 1 by defining kinematic safety of the mechanism as event S and defining the performance Q_i meets the requirement of performance quality as event E_i. The space S is divided into 8 MECE events, $\{e_1 = E_1E_2E_3, e_2 = \overline{E}_1E_2E_3, e_3 = E_1\overline{E}_2E_3, e_4 = E_1E_2\overline{E}_3, e_5 = \overline{E}_1\overline{E}_2E_3, e_6 = \overline{E}_1E_2\overline{E}_3, e_7 = E_1\overline{E}_2\overline{E}_3,$ and $e_8 = \overline{E}_1\overline{E}_2\overline{E}_3\}$. Let $p_i = P(e_i), i = 1, 2, \ldots, 8$ denotes the probability of the ith basic MECE event. These probabilities serve as the design variables in the linear programming problem to be formulated. According to the basic definition of probability,

$$\sum_{i=1}^{8} p_i = 1, \tag{3.2}$$

$$p_i \geq 0, \quad i = (1, 2, \ldots, 8). \tag{3.3}$$

The constraint (3.2) is analogous to the equality constraints in linear programming (3.1) with $\mathbf{a}_1$ being a row vector of 1′s and $\mathbf{b}_1 = 1$, whereas (3.3) is analogous to the inequality constraints with $\mathbf{a}_2$ being an 8×8 identity matrix and $\mathbf{b}_2$ a 8×1 vector of 0′s.

As can be seen from Figure 1,

$$P(E_i) = P_i = \sum_{r:e_r \subseteq E_i} p_r, \tag{3.4}$$

$$P(E_iE_j) = P_{ij} = \sum_{r:e_r \subseteq E_iE_j} p_r, \tag{3.5}$$

scilicet,

$$\begin{aligned} P(E_1) &= P_1 = p_1 + p_3 + p_4 + p_7, \\ P(E_2) &= P_2 = p_1 + p_2 + p_4 + p_6, \\ P(E_3) &= P_3 = p_1 + p_2 + p_3 + p_5, \\ P(E_1E_2) &= P_{12} = p_1 + p_4, \\ P(E_1E_3) &= P_{13} = p_1 + p_3, \\ P(E_2E_3) &= P_{23} = p_1 + p_2. \end{aligned} \tag{3.6}$$

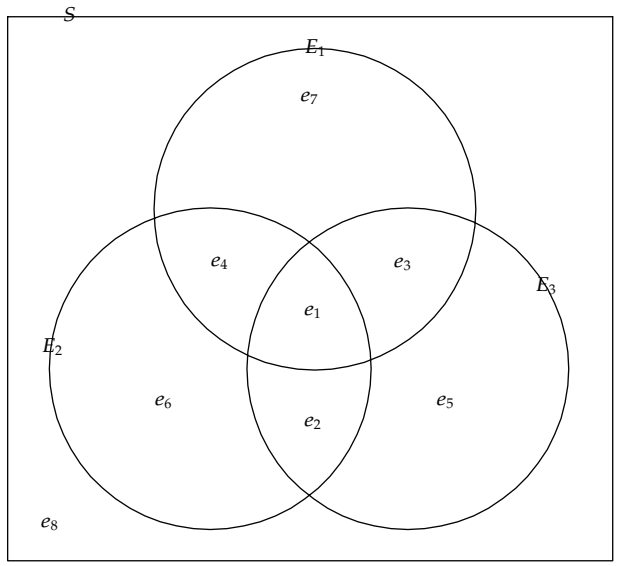

Figure 1: Sample space for the linkage.

Equations (3.4) and (3.5) provide linear equality constraints on the design variable $\mathbf{p}$ with $\mathbf{a}_1$ a matrix having elements of 0 or 1 and $\mathbf{b}_1$ a vector listing the known reliability. With the increase of the known or computed reliability, such as the uni-, bi-, and sometimes trimode reliability, the upper and lower bounds of the system reliability obtained by the linear programming become increasingly accuracy. However, there is always a tradeoff between complexity and accuracy, and with the increase of the constraints, the convergence of the linear programming becomes more and more difficult.

By now, the coefficient matrices and vectors of the constraint functions of linear programming (3.1) to obtain the upper and lower bounds of the system reliability of the mechanism are completely established, which are

$$\mathbf{a}_1 = \begin{bmatrix} 1 & 1 & 1 & 1 & 1 & 1 & 1 & 1 \\ 1 & 0 & 1 & 1 & 0 & 0 & 1 & 0 \\ 1 & 1 & 0 & 1 & 0 & 1 & 0 & 0 \\ 1 & 1 & 1 & 0 & 1 & 0 & 0 & 0 \\ 1 & 0 & 0 & 1 & 0 & 0 & 0 & 0 \\ 1 & 0 & 1 & 0 & 0 & 0 & 0 & 0 \\ 1 & 1 & 0 & 0 & 0 & 0 & 0 & 0 \end{bmatrix},$$
$$\mathbf{b}_1 = \begin{bmatrix} 1 & P_1 & P_2 & P_3 & P_{12} & P_{13} & P_{23} \end{bmatrix}^T,$$
$$\mathbf{a}_2 = \mathbf{I}_{8\times 8},$$
$$\mathbf{b}_2 = \begin{bmatrix} 0 & 0 & 0 & 0 & 0 & 0 & 0 & 0 \end{bmatrix}^T, \tag{3.7}$$

where $\mathbf{I}_{8\times 8}$ is identity matrix with 8×8 dimensions.

Table 1: Coefficients of the object functions $c^T p$.

	c_1	c_2	c_3	c_4	c_5	c_6	c_7	c_8
$E_1 \cup E_2 \cup E_3$	1	1	1	1	1	1	1	0
$E_1 \cap E_2 \cap E_3$	1	0	0	0	0	0	0	0
$E_1 \cap E_2 \cup E_3$	1	1	1	1	1	0	0	0
$(E_1 \cup E_2) \cap (E_2 \cup \overline{E}_3)$	1	1	1	0	0	0	1	0

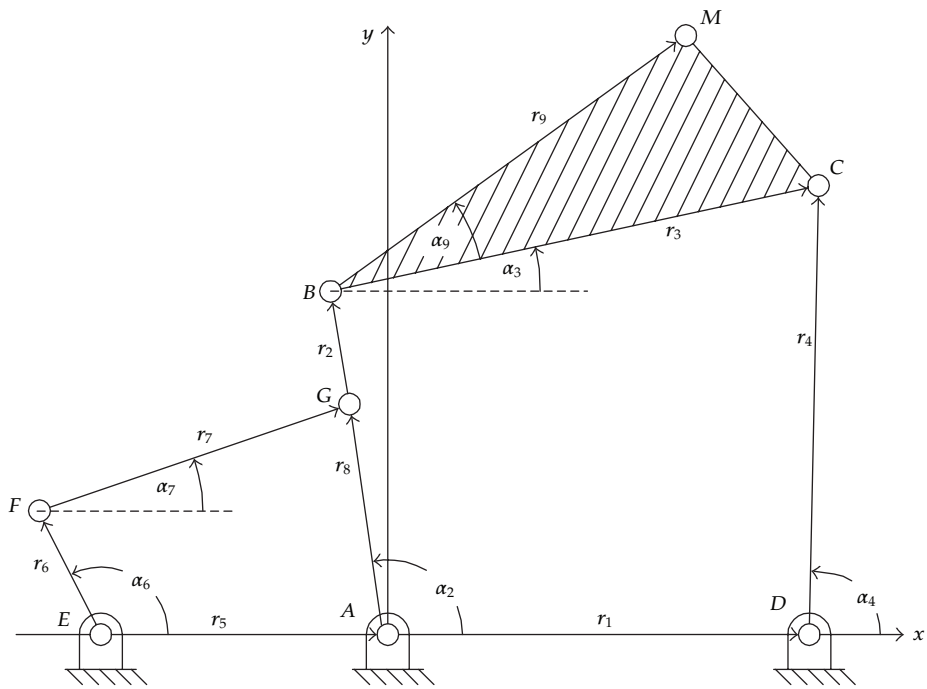

Figure 2: Double-rocker four-bar linkage with driving crank.

According to the relationship between failure modes (series or parallel), there are four different kinds of systems. As shown in Table 1, the coefficient c_i $(i = 1, 2, \ldots, 8)$ of the object functions of linear programming (3.1) for each kind of system can be determined, respectively. So far, the linear programming to derive the lower and upper bounds of the system reliability of a mechanism with random parameters is completely established.

4. Numerical Examples

Consider the vector loop as shown in Figure 2, the nominal geometry characteristics of the double-rocker four-bar linkage with driving crank are shown as: $r_1 = 2.36\,\text{cm}$, $r_2 = 1.33\,\text{cm}$, $r_3 = 5.08\,\text{cm}$, $r_4 = 3.94\,\text{cm}$, $r_5 = 1.00\,\text{cm}$, $r_6 = 0.45\,\text{cm}$, $r_7 = 1.50\,\text{cm}$, $r_8 = 1.00\,\text{cm}$, $r_9 = 6.00\,\text{cm}$, and $\alpha_9 = 30°$. Among them, r_1, r_2, r_3, and r_4 are random variables, which are normally and independently distributed, and the variation coefficient of the random variables are supposed to be $c = 0.001$. All other variables are deterministic parameters. According to the working condition, the maximum allowable values of the kinematic performance errors vector are

$\varepsilon = [0.015\text{ rad},\ 0.8\,\text{mm}, 0.6\,\text{mm}]^T$. The double-rocker four-bar linkage can work normally, only if all the kinematic performance quality requirements are satisfied (i.e., the linkage system is series). It is required to solve the system reliability of the double-rocker four-bar linkage in its working range ($\alpha_6 = 150° \sim 270°$).

As shown in Figure 1, in the double-rocker four-bar linkage with driving crank, the effective dimension variable vector is $\mathbf{L} = [r_1,\ r_2,\ r_3,\ r_4,\ r_5,\ r_6,\ r_7,\ r_8,\ r_9,\ \alpha_9]^T$, the input (independent) and output (dependent) variable vectors are $V = [\alpha_6]$ and $\mathbf{U} = [\alpha_2,\ \alpha_3,\ \alpha_4,\ \alpha_7]^T$, respectively, the performance parameter vector is $\mathbf{Q} = [\alpha_3,\ M_x,\ M_y]^T$, then the closure equations of the planar linkage are

$$\mathbf{F} = \begin{bmatrix} r_6\cos\alpha_6 + r_7\cos\alpha_7 - r_8\cos\alpha_2 - r_5 \\ r_6\sin\alpha_6 + r_7\sin\alpha_7 - r_8\sin\alpha_2 \\ r_2\cos\alpha_2 + r_3\cos\alpha_3 - r_4\cos\alpha_4 - r_1 \\ r_2\sin\alpha_2 + r_3\sin\alpha_3 - r_4\sin\alpha_4 \end{bmatrix}. \tag{4.1}$$

The kinematic performance functions of the linkage are

$$\mathbf{Q} = \begin{bmatrix} \alpha_3 + \alpha_9 \\ r_2\cos\alpha_2 + r_9\cos(\alpha_3 + \alpha_9) \\ r_2\sin\alpha_2 + r_9\sin(\alpha_3 + \alpha_9) \end{bmatrix}, \tag{4.2}$$

Suppose that $\mathbf{X} = [r_1, r_2, r_3, r_4]^T$ is the random variable vector, then the Jacobian matrices are derived as:

$$\begin{gathered}
\frac{\partial \mathbf{F}}{\partial \mathbf{X}^T} = \begin{bmatrix} 0 & 0 & 0 & 0 \\ 0 & 0 & 0 & 0 \\ -1 & \cos\alpha_2 & \cos\alpha_3 & -\cos\alpha_4 \\ 0 & \sin\alpha_2 & \sin\alpha_3 & -\sin\alpha_4 \end{bmatrix}, \\
\frac{\partial \mathbf{F}}{\partial \mathbf{U}^T} = \begin{bmatrix} r_8\sin\alpha_2 & 0 & 0 & -r_7\sin\alpha_7 \\ -r_8\cos\alpha_2 & 0 & 0 & r_7\cos\alpha_7 \\ -r_2\sin\alpha_2 & -r_3\sin\alpha_3 & r_4\sin\alpha_4 & 0 \\ r_2\cos\alpha_2 & r_3\cos\alpha_3 & -r_4\cos\alpha_4 & 0 \end{bmatrix}, \\
\frac{\partial \mathbf{Q}}{\partial \mathbf{X}^T} = \begin{bmatrix} 0 & 0 & 0 & 0 \\ 0 & \cos\alpha_2 & 0 & 0 \\ 0 & \sin\alpha_2 & 0 & 0 \end{bmatrix}, \\
\frac{\partial \mathbf{Q}}{\partial \mathbf{U}^T} = \begin{bmatrix} 0 & 1 & 0 & 0 \\ -r_2\sin\alpha_2 & -r_9\sin(\alpha_3 + \alpha_9) & 0 & 0 \\ r_2\cos\alpha_2 & -r_9\cos(\alpha_3 + \alpha_9) & 0 & 0 \end{bmatrix}.
\end{gathered} \tag{4.3}$$

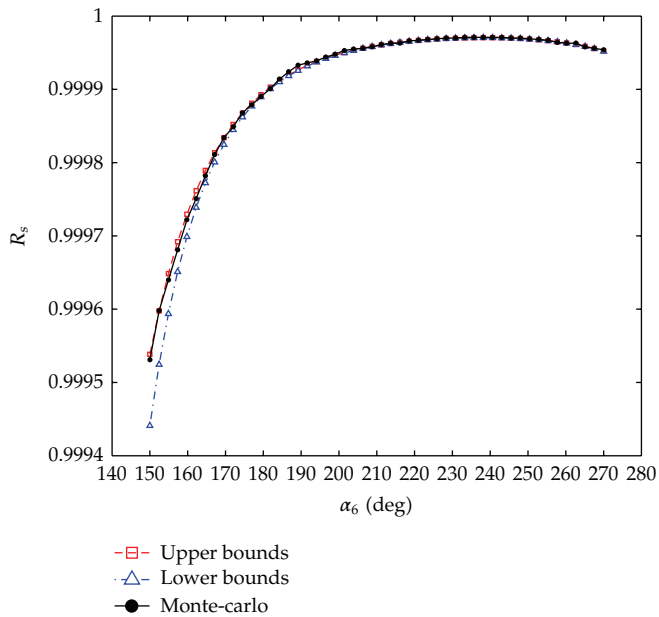

Figure 3: System reliability of the double-rocker four-bar linkage with driving crank.

By substituting (4.3) into (2.3), the kinematic performance error vector, $\Delta\mathbf{Q}$, of the linkage can be obtained. Then (2.12) can be used to obtain the reliability corresponding to each failure mode. The covariance matrix of the limit sate functions of the planar linkage can be derived from (3.5), and then the joint reliability between each two failure modes can also be derived from (2.15).

The upper and lower bounds of the system reliability of the double-rocker four-bar linkage can be obtained by solving the linear program (3.1), and the results are, respectively, shown as the pan dash line and triangle dash dot line in Figure 3. Besides the system reliability of the manipulator using Monte-Carlo simulation with 10^6 samples is shown as the point solid line. What needs to be specially notified is that, in order to demonstrate the proposed mechanism system reliability analysis method, the truncation errors caused by the first-order Taylor expansion are omitted in the Monte-Carlo simulation. Comparing with the results of numerical simulation, the kinematic performance system reliability of the double-rocker four-bar linkage obtained by the proposed method is of high accuracy.

5. Conclusions

Using the mechanism accuracy theory and (system) reliability analysis method, this paper proposes a general method for system reliability analysis of planar linkages with correlated failure modes. The proposed method is applicable to any system defined as a logical expression of kinematic failure modes of planar linkages. This includes series and parallel systems, as well as general systems. Utilization of the first-order Taylor expansion technique in error estimation of kinematic performance of mechanisms must result in a certain degree of truncation errors. And these errors will increase with the increase of sensitivity of performance functions to design parameters. The accuracy of system reliability analysis can be improved by increasing of the order of Taylor expansion. However, in this process, the

complexity of calculation will greatly increase. Further studies are needed to provide a more precise and robust method for reliability analysis of kinematic accuracy of mechanisms.

Acknowledgments

The authors gratefully acknowledge the support of National Natural Science Foundation of China (51105062 & 51135003). Moreover, the authors would like to give their thanks to the anonymous referees and the editor for their valuable comments and suggestions leading to an improvement of the paper.

References

[1] S. Dubowsky, J. Maatuk, and N. D. Perreira, "A parameter identification study of kinematic errors in planar mechanism," *Journal of Engineering for Industry*, vol. 97, no. 2, pp. 635–642, 1975.
[2] K. W. Chase and A. R. Parkinson, "A survey of research in the application of tolerance analysis to the design of mechanical assemblies," *Research in Engineering Design*, vol. 3, no. 1, pp. 23–37, 1991.
[3] X. Huang and Y. Zhang, "Robust tolerance design for function generation mechanisms with joint clearances," *Mechanism and Machine Theory*, vol. 45, no. 9, pp. 1286–1297, 2010.
[4] V. I. Sergeyev, "Methods for mechanism reliability calculation," *Mechanism and Machine Theory*, vol. 9, no. 1, pp. 97–106, 1974.
[5] T. S. Liu and J. D. Wang, "A reliability approach to evaluating robot accuracy performance," *Mechanism and Machine Theory*, vol. 29, no. 1, pp. 83–94, 1994.
[6] S. S. Rao and P. K. Bhatti, "Probabilistic approach to manipulator kinematics and dynamics," *Reliability Engineering and System Safety*, vol. 72, no. 1, pp. 47–58, 2001.
[7] J. Kim, W.-J. Song, and B.-S. Kang, "Stochastic approach to kinematic reliability of open-loop mechanism with dimensional tolerance," *Applied Mathematical Modelling*, vol. 34, no. 5, pp. 1225–1237, 2010.
[8] J. Wang, J. Zhang, and X. Du, "Hybrid dimension reduction for mechanism reliability analysis with random joint clearances," *Mechanism and Machine Theory*, vol. 46, no. 10, pp. 1396–1410, 2011.
[9] Y. Zhang, X. Huang, X. Zhang, X. He, and B. Wen, "System reliability analysis for kinematic performance of planar mechanisms," *Chinese Science Bulletin*, vol. 54, no. 14, pp. 2464–2469, 2009.
[10] K. L. Ting and Y. Long, "Performance quality and tolerance sensitivity of mechanisms," *Journal of Mechanical Design, Transactions of the ASME*, vol. 118, no. 1, pp. 144–150, 1996.
[11] W. J. Vetter, "Matrix calculus operations and Taylor expansions," *SIAM Review*, vol. 15, pp. 352–369, 1973.
[12] O. Ditlevsen, "Narrow reliability bounds for structural systems," *Mechanics Based Design of Structures and Machines*, vol. 7, no. 4, pp. 453–472, 1979.
[13] Y. C. Zhang, "High-order reliability bounds for series systems and application to structural systems," *Computers and Structures*, vol. 46, no. 2, pp. 381–386, 1993.
[14] J. Song and A. D. Kiureghian, "Bounds on system reliability by linear programming," *Journal of Engineering Mechanics*, vol. 129, no. 6, pp. 627–636, 2003.
[15] J. Song and W. H. Kang, "System reliability and sensitivity under statistical dependence by matrix-based system reliability method," *Structural Safety*, vol. 31, no. 2, pp. 148–156, 2009.