Hindawi Publishing Corporation
Mathematical Problems in Engineering
Volume 2013, Article ID 260351, 6 pages
http://dx.doi.org/10.1155/2013/260351

Research Article

Photovoltaic Power Prediction Based on Scene Simulation Knowledge Mining and Adaptive Neural Network

Dongxiao Niu, Yanan Wei, and Yanchao Chen

School of Economics and Management, North China Electric Power University, Beijing 102206, China

Correspondence should be addressed to Yanan Wei; weiyanan010@163.com

Received 20 March 2013; Revised 3 September 2013; Accepted 3 September 2013

Academic Editor: Chuandong Li

Influenced by light, temperature, atmospheric pressure, and some other random factors, photovoltaic power has characteristics of volatility and intermittent. Accurately forecasting photovoltaic power can effectively improve security and stability of power grid system. The paper comprehensively analyzes influence of light intensity, day type, temperature, and season on photovoltaic power. According to the proposed scene simulation knowledge mining (SSKM) technique, the influencing factors are clustered and fused into prediction model. Combining adaptive algorithm with neural network, adaptive neural network prediction model is established. Actual numerical example verifies the effectiveness and applicability of the proposed photovoltaic power prediction model based on scene simulation knowledge mining and adaptive neural network.

1. Introduction

Facing the increasingly severe problem of tradition energy consumption and environment pollution, solar power is attracting more and more attention. With the development of grid-connected photovoltaic power (PV) generation, it has been regarded as a kind of effective way to make full use of solar energy, which is economic and environmental [1]. Recently, the grid-connected photovoltaic power system has been widely used around the world. However, due to the variations of light intensity and temperature, solar power owns the characters of volatility and intermittece, which are not conducive to stable operation of power grid. Therefore, it is important to predict the output power with less forecast error, to reduce the influence of PV power on grid, and to improve security and stability of power system [2–4].

In the early period, trend extrapolation, regression analysis, time series [5], and so on are the main methods to power prediction. But these methods have been difficult to meet the requirements of modern industry. Recently, artificial intelligence method becomes hot spot. Many new techniques and methods such as fuzzy method, expert system, artificial neural network (ANN), wavelet analysis, and support vector machine (SVM), and so forth, have been developed quickly [6]. Among them, it is recognized that ANN is a more effective way for short-term load forecasting [7] and has made many successful applications [8]. Based on data of light intensity and temperatures, some researches [9] use ANN to forecast PV power. However, there is little research on the overall consideration about various factors. Besides light intensity and temperature, there are numerous factors to be considered, including angles of incidence, conversion efficiency, installation angles of PV array, atmospheric pressure, and some other random factors. This paper comprehensively considers various factors to forecast photovoltaic power. For amount factors, the above parameters would require lots of computational resources, and ANN might suffer from multiple local minima easily. What is more results lacking clarity need to be explained. Thus, this paper introduces a new concept: scene simulation knowledge mining (SSKM) aimed to analyze the influencing factors and simulate the output power of PV.

This paper is organized as follows. In Section 2, the influencing factors of PV and the relationship between factors and output power are analyzed. The SSKM is used to cluster all elements in Section 3, and an adaptive algorithm is put forward to establish an improved adaptive ANN model. To prove the accuracy and practicability of the method, some calculating examples are given in Section 4.

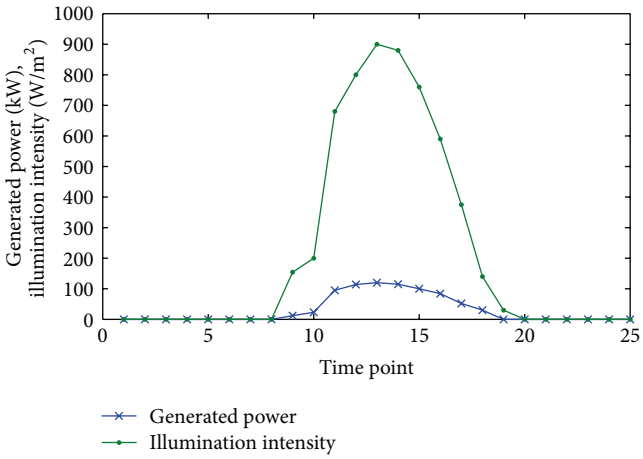

Figure 1: Photovoltaic generation power and light intensity.

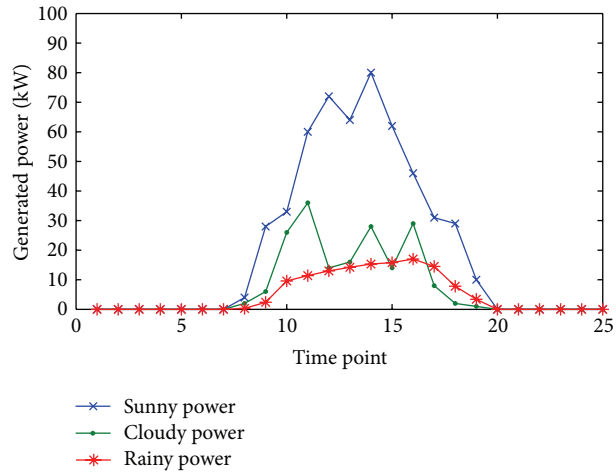

Figure 2: Photovoltaic power on different day types.

2. Factors Analysis

Many factors influence the generating capacity of PV grid system. Actually, because of various conditions, it could not be determined in advance one by one and is not necessary to be distinguished meticulously. Some influences can be combined into several correction groups, added with certain safety coefficient.

Influenced by many factors, change of PV generation capacity is a nonstationary random process with obvious cyclicity. An obvious feature for PV system is that the output time series is highly autocorrelated. Almost all PV grid inverters run with a relatively stable power conversion efficiency at maximum power point tracking (MPPT) model. Its output power is highly correlated. Although the efficiency of power conversion and photoelectric conversion changes over time, during system life cycle, the variation is relatively small, so much so that in short-term prediction can be considered as constant.

Therefore, the power conversion efficiency of inverter, photoelectric conversion efficiency of PV array, and area of the PV array can be ignored, since they are implicitly included in electricity data. Based on the above analysis, light intensity, day type, temperature, season, and the output data are the major factors taken into consideration in this paper.

2.1. Light Intensity. A method of calculating output power per unit area can be found in [10]. Consider

$$P_s = \eta SI\left(1 - 0.005\left(t_0 + 25\right)\right), \tag{1}$$

where η donates photovoltaic power conversion efficiency; the area of photovoltaic power supply is S; light intensity is I; and the environment temperature is t_0. Figure 1 is the photovoltaic generation power and light intensity curve. We can see from Figure 1 that the variation regularity of power curve and light intensity curve is similar. The change trend of photovoltaic generation power can be mapped to the change of light intensity. Therefore, this paper takes light intensity as an input value of the forecasting model.

2.2. Day Type. Generally, PV system mainly outputs power from 7:00 to 18:00. Figure 2 shows the power curves at a PV system in sunny, cloudy, and rainy days. It is easy to recognize that there are large differences among different day types.

For sunny day type, changes of electricity curves can broadly reflect the intensity of sun irradiation in a day. When the weather becomes rainy, solar irradiation intensity decreases obviously. If the input parameters ignore these changes of radiation intensity, the forecast will be inaccurate. So, some appropriate variables to reflect weather change correctly as well as corresponding variation of PV are needed.

With the development of weather forecast, the prediction model ought to take daily weather forecast information into consideration to deal with different day types. But, weather parameters are generally given by vague description, such as sunny, cloudy, rain, moderate rain, or heavy rain. So, plenty of statistical analyses on historical electricity have to be done to decide how to change vague and uncertain description of day types to accurate information, which is accepted by prediction model. Thus, In order to improve the prediction accuracy, PV data needs to be classified into three groups: sunny, cloudy, and rainy.

2.3. Temperature. The changes of atmospheric temperature can influence photovoltaic power system to a certain degree. Though historic data of photovoltaic reflects similarity between power curve and day types, the changes of temperature can reflect tiny change of curve height in the same day. So, we should take atmospheric temperature as an input variable.

Figure 3 shows the relationship between average day PV power and temperature of a photovoltaic system, in which the day type is sunshine. From Figure 3, we can know that in the same day type, the higher the average temperature is, the larger the day output power is.

2.4. Season. Season also plays an important role in photovoltaic output. The output of photovoltaic modules is changing with solar radiation intensity, and solar radiation intensity is different in diverse seasons.

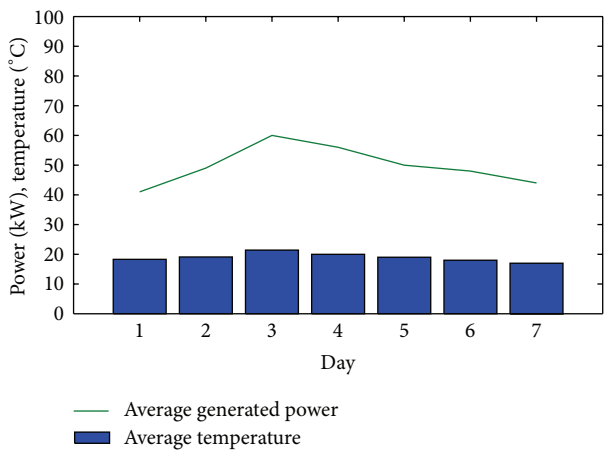

Figure 3: Influence of temperature on photovoltaic power.

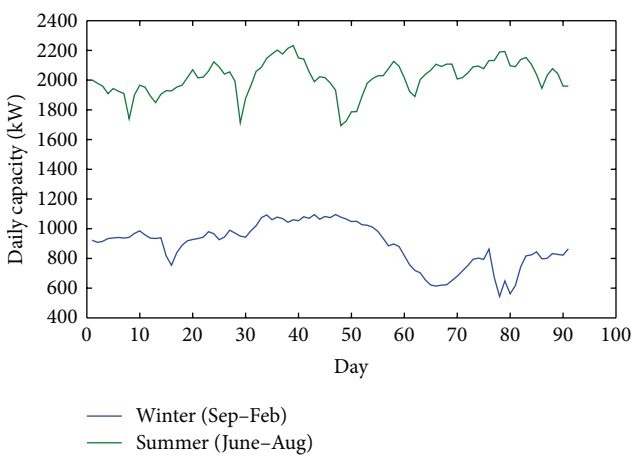

Figure 4: Photovoltaic generation power in different season.

Besides, the photovoltaic system is installed in different locations where the climatic condition is variable, which make the effect degree of season on photovoltaic output the different. According to NASA, we can get atmosphere data of diverse districts. The data reflects that temperature and solar radiation intensity vary a lot in different months. Especially in summer, the numerical values of temperature and solar radiation are much higher than that in winter. So, we can infer that the output of photovoltaic system varies in variable seasons.

Based on the above analysis, we make statistics choosing electric production data from June to August of 2010 and from December 2010 to February 2011. We aggregate data of two to three months and make comparison in accordance with day arrays. In Figure 4, we can find a law that the electric production in summer is higher than that in winter. On the one hand, the solar radiation intensity is much stronger in summer; on the other hand, the solar radiation time is also much longer than that in winter, which makes the photovoltaic modules work longer and more effective. At the same time, we can see the electric production in summer fluctuates a lot more than in winter, which means that the output of photovoltaic system is largely influenced by rainy days.

This section mainly analyzes several influential factors aimed at the uncertainty of photovoltaic output, including day type, season, temperature, and solar radiation. Through the comparison and analysis of historic data, we can approximately know their effect on the photovoltaic output. In the following section, we will build an accurate and reasonable forecast model based on the results above.

3. Prediction Model Based on Scene Simulation Knowledge Mining and Adaptive Neural Network

For photovoltaic power, we mainly consider the influence of light intensity, season, day type, and temperature. According to scene simulation knowledge mining, select high similarity historical data and meteorological environment as learning sample to complete scene simulation knowledge mining as the first step. Neural network prediction model can simulate arbitrary complex nonlinear mapping with the advantage of being intelligent. Here adaptive neural network is chosen to forecast photovoltaic power.

3.1. Scene Simulation Knowledge Mining Technique. By the above analysis, we know that the influence degree of meteorological factors on photovoltaic power is different. Light intensity, day type, temperature, and season can make different degrees of influence on photovoltaic power, and the power is often a result of combined action of various meteorological factors [11–13]. How to effectively deal with various meteorological factors is important to improve the prediction accuracy.

According to scene simulation knowledge mining technique, take the day characteristic similarity and the former trend similarity as index to choose similar scene as input value of forecast model.

Definition 1. Characteristic similarity for two days i and j is defined as follows:

$$O_{ij} = \frac{\sum_{k=1}^{m} x_{ik} y_{jk}}{\sqrt{\sum_{k=1}^{m} x_{ik}^2 \sum_{k=1}^{m} y_{ik}^2}}, \tag{2}$$

where O_{ij} is characteristic similarity. It is angle cosine between two eigenvectors in m-dimensional space which reflects the distance between two-day characters in m-dimensional space.

Definition 2. Former trend similarity of i, j is defined as follows:

$$F_{ij} = \frac{2\left[E\left(\overline{X_i}\,\overline{X_j}\right) - E\left(\overline{X_i}\right)E\left(\overline{X_j}\right)\right]}{D\left(\overline{X_i}\right) + D\left(\overline{X_j}\right)}. \tag{3}$$

Former trend similarity refers to average k day power curve similarity before the two days. Suppose k average power sequence before i, j is $(\overline{x_{ik}}, \overline{x_{i(k-1)}}, \ldots, \overline{x_{i1}})$, $(\overline{x_{jk}}, \overline{x_{j(k-1)}}, \ldots, \overline{x_{j1}})$. These values can be recognized as sampling points of, respectively, probability distribution random vector.

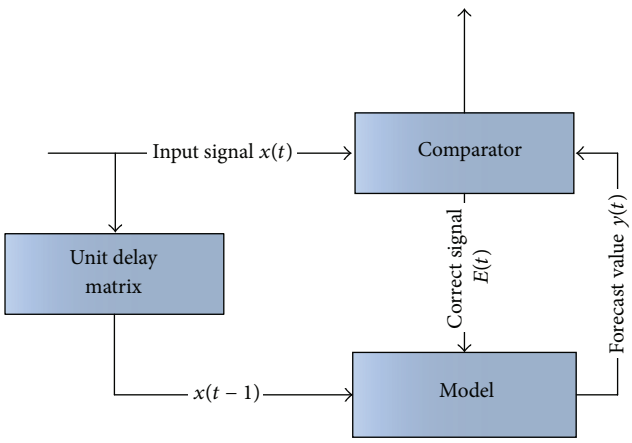

Figure 5: Block diagram of an adaptive system.

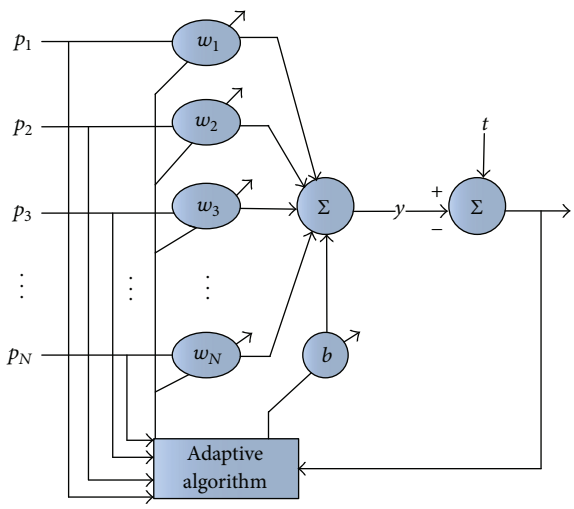

Figure 6: Adaptive artificial neural network.

3.2. Adaptive Neural Network. According to the latest situation to automatically adjust model so as to achieve satisfied prediction effect which is very important, adaptive prediction method continuously automatically adjusts model structure and parameters based on prediction deviation which actually forms a closed loop feedback [14]. A typical adaptive system block diagram is shown in Figure 5.

According to model and actual value of $t-1$ time and parameters of t time, we can predict output value $y(t)$ of t time. $E(t)$ is D-value of $y(t)$ and $x(t)$. If $E(t) = 0$, model parameter needs no correction. Otherwise, we amend the model parameters in order to track environment change.

Works of the literature [15] introduce the principle and application of adaptive neural network algorithm. Adaptive neural network can choose new paradigm for neural network training. Neuron structure of adaptive neural network is shown in Figure 6.

The output of Figure 6 is

$$y = \sum_{j=1}^{R} p_i w_{i,j} + b_i. \tag{4}$$

Adaptive neural network adopts the minimum mean square error (MSE) learning rule, namely, Windrow Hoff (WH) algorithm, to adjust weights and thresholds. For a given N set of training samples; $\{p_1, t_1\}$, $\{p_1, t_1\}, \ldots, \{p_N, t_N\}$, the basic implementation of WH learning rule is to find the best w and b, to minimize mean square error of each output neuron. The mean square error of neuron is

$$\mathrm{MSE} = \frac{1}{N}\sum_{i=1}^{N}(t_i - y_i)^2, \tag{5}$$

where t is the target value and y is the predicted value. Strives for partial derivatives of mean square error, we can get the optimal solution of w and b, respectively. Consider

$$\begin{aligned} \frac{\partial \mathrm{MSE}}{\partial w} &= \frac{\partial\left((1/N)\sum_{i=1}^{N}(t_i - y_i)^2\right)}{\partial w}, \\ \frac{\partial \mathrm{MSE}}{\partial b} &= \frac{\partial\left((1/N)\sum_{i=1}^{N}(t_i - y_i)^2\right)}{\partial b}. \end{aligned} \tag{6}$$

Setting type (6) equal to 0, extreme value point of mean square error can be calculated. Because of the continuous correction of model parameter, adaptive neural network is much faster than feed-forward network.

Adaptive neural network is able to obtain a set of continuous data, make accurate predictions, automatically discard old data, and study new data in the process of learning [16].

The adaptive data training process is as follows [17, 18].

(1) Define the error function as

$$E = \frac{1}{N}\sum_{k1=1}^{N}(t_{k1} - y_{k1})^2, \tag{7}$$

where N is the size of learning array; t_{k1} is target value; y_{k1} is predicted value. After learning weight w, make a prediction.

(2) Set studied weight and threshold values as initial values of new training array's weight and threshold, the new training function is

$$E = \frac{1}{N}\sum_{k2=1}^{N+1}(t_{k2} - y_{k2})^2. \tag{8}$$

(3) Start new forecast based on the studied weight in step (2). Proceed the above process until learning all of the data and making accurate forecast. This method can effectively deal with nonstatic data. Learning data for neural network is historical load and meteorological data in this paper.

4. Numerical Example Analysis

This power output prediction model of PV power generation system uses Mat lab programming implementation and selects Guangdong photovoltaic power generation system as an example. The precision time is 1 h, the time from 7:00 to

Table 1: Prediction error for different models.

Time	Winter			Spring			Summer			Fall		
	BP	NP	MODEL	BP	NP	MODEL	BP	NP	MODEL	BP	NP	MODEL
7	—	—	—	120.5	85.4	45.3	50.3	47.1	15.4	142.3	46.2	18.1
8	36.2	40.5	20.4	51.5	34	10.3	46.1	40.5	5	60.4	40	9.4
9	36	24	12.3	20.3	25	12.5	30.8	21.5	4	30.4	32.6	14.5
10	16.4	13.4	10.8	42.6	16	12.4	22.7	20.5	2.4	35.4	23.4	14.2
11	41.8	20.4	16.7	34.8	26.4	10.8	16.8	20.4	3.5	28.6	25	10.4
12	69	26.4	25.7	60.7	21.4	5.6	20.7	10.6	1.6	52	20.8	8.6
13	157.8	34.6	17.3	20.4	13.8	20.4	18.6	11.5	1.2	18.2	19.3	15.4
14	27.5	30.7	15	38.6	11.7	26.7	17.3	9.7	1	35.4	15.7	21.6
15	98.4	50.4	24.6	79.1	25.9	22.4	12.4	8.6	1.3	60.7	22.3	20
16	39	20	10.4	25.7	20.8	17.3	19.4	10.5	2.4	20.7	15.8	11.8
17	32.4	30	8.4	20	15.3	10.8	20.6	15.4	4.1	13	14	14
18	35.4	20.9	6.7	31	10.8	5.4	21.7	9.4	5.4	27.6	12.6	12.8
Average	53.6	28.3	15.3	45.4	25.5	16.7	24.8	18.8	3.9	43.7	24.0	14.2

Table 2: Prediction error for different day styles.

Time	Winter			Spring			Summer			Fall		
	Rainy day	Cloudy day	Sunny day	Rainy day	Cloudy day	Sunny day	Rainy day	Cloudy day	Sunny day	Rainy day	Cloudy day	Sunny day
7	—	—	—	52.4	34	20.4	30.4	22	15.4	35.4	20	10.5
8	36.2	20.5	12.5	30.4	25.1	11	24.5	15.4	0.5	23.4	21.4	2.4
9	36	24	12.7	32.4	23	12.3	11.5	16.4	0.8	31.4	22	4.6
10	37.6	23.7	10.4	35	21	10.4	20.4	12	2.1	30	21.4	0.8
11	41.8	20.7	16.5	34.8	26.4	14	15.3	10.5	1.5	28.6	20.1	10.5
12	30.5	26.4	15.4	30.4	22.4	10.5	12.5	13	1.4	27.5	15.2	5.4
13	25.4	24.5	18.4	31.2	15.4	11.4	10.5	5.6	1.6	30.4	10.5	12
14	27.5	20.1	12	24.3	13.4	5.4	25.6	8.4	2.4	25	5.4	4.5
15	35.1	23.5	11	38.1	20.7	8.6	24.1	8.6	1.8	34	15.4	16.4
16	39	24	10.3	25.7	22	7.1	29.5	10.7	0.7	29	18.6	11.4
17	32.8	22	11.7	30.4	15.3	10.8	26.4	11	1.4	27	14.2	10.5
18	33.4	20.4	6.7	30	14.5	6.3	22.7	13	1.8	34.5	10.4	2.4
Average	34.1	22.7	12.5	32.9	21.1	10.7	21.1	12.2	2.6	29.7	16.2	7.6

18:00. The sun radiation from 7 p.m. to 6 a.m. is 0, so it is not included in the study [19, 20].

In order to validate the proposed prediction model, one day was randomly chosen from each season of the year 2010, that is, D1 = December 25 for winter, D2 = April 20 for spring, D3 = July 15 for summer, and D4 = October 23 for fall. Three models are chosen to be predicted, respectively. Model 1 is traditional BP neural network forecasting model without the proposed scene simulation knowledge mining. Model 2 is ordinary adaptive neural network forecasting model. Model 3 is the proposed adaptive neural network prediction model based on scene simulation knowledge mining. The following table is PV power prediction error from different prediction models. As can be seen from Table 1, for the same season, prediction error of traditional BP neural network is much bigger, the adaptive neural network is relatively small, and the prediction result of the proposed adaptive neural network prediction model based on scene simulation knowledge mining is the best. For the proposed prediction method, analysis results in different seasons, comprehensive prediction error in summer (3.9%) is the minimum, and error in winter (14.2%) is the maximum.

In order to further assess the forecasting capability of the proposed adaptive neural network prediction model based on scene simulation knowledge mining, simulations are carried out for three different days—sunny day (SD), cloudy day (CD), and rainy day (RD) from each season, and the results obtained from the proposed model are presented in Table 2 where we can observe the lower values of MAPE in SDs compared to CDs and RDs.

Through the effective analysis of influencing factors of PV power output, combined with the improved adaptive neural network prediction model and scene simulation knowledge mining technique, a photovoltaic power prediction model based on scene simulation knowledge mining and adaptive neural network is proposed. The benefit of the proposed

approach is that it does not require complex modeling and complicated calculation; forecast under different weather types can be carried out using only historical power data and weather data. The test results proved validity and accuracy of the proposed approach; the proposed approach can be used to forecast the power output of photovoltaic system precisely.

5. Conclusions

With the development of the grid-connected photovoltaic power (PV), it has been regarded as a kind of effective way to make full use of solar energy, which is economic and environmental. Influenced by light, temperature, atmospheric pressure, and some other random factors, photovoltaic power has characteristics of volatility and intermittece. Accurately forecasting photovoltaic power can effectively improve security and stability of power grid system. We comprehensively analyze the influence of light intensity, day type, temperature, and season on photovoltaic power in this paper. According to proposed scene simulation knowledge mining technique, similar meteorological factors and power are taken as input value in prediction model. Combining advanced adaptive neural network and scene simulation knowledge mining, photovoltaic power prediction model based on scene simulation knowledge mining and adaptive neural network is established. Guangdong photovoltaic power generation system is selected to verify the proposed model. The test results proved validity and accuracy of the proposed approach; the proposed approach can be used to forecast the power output of photovoltaic system precisely.

Acknowledgments

This work was partially supported by the Natural Science Foundation of China (71071052) and the Fundamental Research Funds for the Central Universities (12QX22).

References

[1] D. Niu, Y. Wei, Y. Shi, and H. R. Karimi, "A novel evaluation model for hybrid power system based on vague set and Dempster-Shafer evidence theory," *Mathematical Problems in Engineering*, Article ID 784389, 12 pages, 2012.

[2] D. Niu, Y. Wei, and L. Fan, "Social comprehensive benefit evaluation for hybrid power system including thermal power, wind power and photovoltaic power," *Energy Education Science and Technology B*, vol. 5, no. 2, pp. 1113–1120, 2013.

[3] R.-J. Wai and C.-Y. Lin, "Active low-frequency ripple control for clean-energy power-conditioning mechanism," *IEEE Transactions on Industrial Electronics*, vol. 57, no. 11, pp. 3780–3792, 2010.

[4] I.-S. Kim, M.-B. Kim, and M.-J. Youn, "New maximum power point tracker using sliding-mode observer for estimation of solar array current in the grid-connected photovoltaic system," *IEEE Transactions on Industrial Electronics*, vol. 53, no. 4, pp. 1027–1035, 2006.

[5] A. Yona, T. Senjyu, T. Funabashi et al., "Application of neural network to one-day-ahead 24 hours generating power forecasting for photovoltaic system," *Intelligent Systems Applications to Power Systems*, vol. 1-2, pp. 423–428, 2007.

[6] H. Zhao, Z. Ren, and W. Huang, "Short-term load forecasting considering weekly period based on periodical auto regression," *Proceedings of the Chinese Society of Electrical Engineering*, vol. 17, no. 3, pp. 211–216, 1997.

[7] X. Li, M. Luo, and K. Feng, "Comparison of neural network methods for short-term load forecasting," *Relay*, vol. 35, no. 6, pp. 49–53, 2007.

[8] A. Prias, B. Buchenel, and Y. Jaccard, "Heterogeneous artificial neural network for short term electrical load forecasting," *IEEE Transactions on Power Systems*, vol. 11, no. 1, pp. 456–463, 1996.

[9] A. Yona, T. Senjyu, and T. Funabashi, "Application of recurrent neural network to short-term-ahead generating power forecasting for photovoltaic system," in *Proceedings of the IEEE Power Engineering Society General Meeting*, June 2007.

[10] W. Guo, J. Liu, Y. Ma et al., "Optimal algorithm of electric power system's short-term load forecasting based on radial function neural network," *Power System Protection and Control*, vol. 36, no. 23, pp. 45–48, 2008.

[11] C. Kang, A. Zhou, P. Wang et al., "Impact analysis of hourly factors in short-term load forecasting and its processing strategy," *Power System Technology*, vol. 30, no. 7, pp. 5–11, 2006.

[12] X. Liu, D. Luo, J. Yao et al., "Short-term load forecasting based on load decomposition and hourly weather factors," *Power System Technology*, vol. 33, no. 12, pp. 94–100, 2009.

[13] H. Qin, W. Wang, H. Zhou et al., "Short-term electric load forecast using human body amenity indicator," *Proceedings of the CSU-EPSA*, vol. 18, no. 2, pp. 63–66, 2006.

[14] D. Wu, "Discussion on various formulas for forecasting human comfort index," *Meteological Science and Technology*, vol. 31, no. 6, pp. 370–372, 2003.

[15] A. Sinha, "Short term load forecasting using artificial neural network," *IEEE Transactions on Power Systems*, pp. 548–553, 2000.

[16] C. Kang, Q. Xia, and B. Zhang, "Review of power system load forecasting and its development," *Automation of Electric Power Systems*, vol. 28, no. 17, pp. 1–11, 2004.

[17] H. Yoo and R. Pimmel, "Short term load forecasting using a self-supervised adaptive neural network," *IEEE Transactions on Power Systems*, vol. 14, no. 2, pp. 779–784, 1999.

[18] J. Wu and H. Yan, "Short-term load forecasting technique based on adaptive optimal fuzzy logic system," *Automation of Electric Power Systems*, vol. 23, no. 17, pp. 35–37, 1999.

[19] J. Xie and G. Tang, "Fuzzy inference forecasting of power load with self-learning function," *Journal of Southeast University*, vol. 28, no. 4, pp. 156–160, 1998.

[20] D. Singh and S. P. Singh, "Self organization and learning methods in short term electric load forecasting: a review," *Electric Power Components and Systems*, vol. 30, no. 10, pp. 1075–1089, 2002.