Hindawi Publishing Corporation
Mathematical Problems in Engineering
Volume 2013, Article ID 979384, 11 pages
http://dx.doi.org/10.1155/2013/979384

Research Article

Brake Performance Analysis of ABS for Eddy Current and Electrohydraulic Hybrid Brake System

Ren He,[1] Xuejun Liu,[1,2] and Cunxiang Liu[2]

[1] *School of Automotive & Traffic Engineering, Jiangsu University, Zhenjiang 212013, China*
[2] *Department of Automotive Engineering, Guangxi Vocational and Technical College of Communications, Nanning 530023, China*

Correspondence should be addressed to Xuejun Liu; gxlxj2000@tom.com

Received 24 September 2013; Revised 29 October 2013; Accepted 30 October 2013

Academic Editor: Hui Zhang

This paper introduces an eddy current and electro-hydraulic hybrid brake system to solve problems such as wear, thermal failure, and slow response of traditional vehicle brake system. Mathematical model was built to calculate the torque of the eddy current brake system and hydraulic brake system and analyze the braking force distribution between two types of brake systems. A fuzzy controller on personal computer based on LabVIEW and Matlab was designed and a set of hardware in the loop system was constructed to validate and analyze the performance of the hybrid brake system. Through lots of experiments on dry and wet asphalt roads, the hybrid brake system achieves perfect performance on the experimental bench, the hybrid system reduces abrasion and temperature of the brake disk, response speed is enhanced obviously, fuzzy controller keeps high utilization coefficient due to the optimal slip ratio regulation, and the total brake time has a smaller decrease than traditional hydraulic brake system.

1. Introduction

The electro-hydraulic antilock brake system (ABS) has already become the conventional equipment in commercial vehicles. However, as the increase of the engine power, the improvement of vehicle speed, and vehicle safety standard, traditional hydraulic ABS gradually presents many problems, such as the time delay in pressure building up, noise, squeal, brake pad wear, harmful friction dust, and braking system thermal failure due to its contact movement. Also, the poor braking performance at high speed needs enhancement. Thus, a new more powerful and stable braking system is required to ensure reliability and safety of vehicles.

In order to solve the problems of traditional hydraulic braking system, the eddy current brake system is a good choice; its features of rapid responding speed, contactless braking principle, perfect performance in high speed, and so forth have already been acknowledged by users but the eddy current brake system has some shortcoming, too. For example, it perhaps needs extra battery to provide electric current for electromagnetic coil when high brake torque needed. Otherwise, the poor brake ability in low speed is also a limitation to practical application.

How to make full use of the advantage of eddy current brake system and traditional hydraulic brake system and design an eddy current and electro-hydraulic hybrid brake system has become one of the important research directions in vehicle braking system. Many researchers have achieved lots of achievements in the past several decades. Desta invented an eddy current braking device which was equipped on the vehicle's transmission axle to assist hydraulic braking system [1]. Anwar and Zheng discussed antilock-braking algorithm for an eddy current-based brake-by-wire system and designed a nonlinear sliding-mode-type controller for slip regulation in a braking event [2, 3]. Gay presented a contactless magnetic brake for automotive applications; an integrated mechanism based on electromagnetic braking and hydraulic braking was described in his papers [4]. Performance evaluation of a hybrid electric brake system with a sliding mode controller was made by Song [5]; a configuration of hybrid system (HEBS) and mathematical model was built to evaluate the braking performance. He et al.

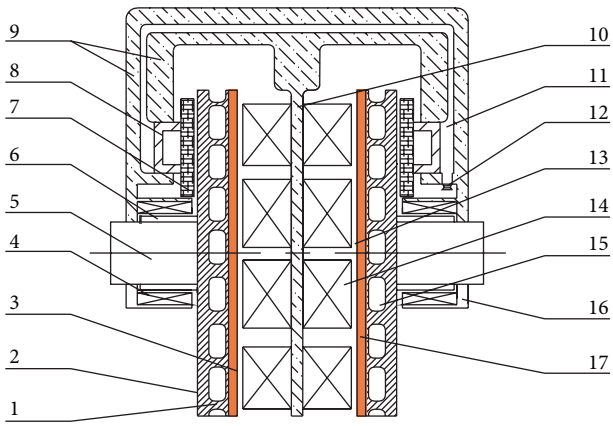

Figure 1: Structural diagram of hybrid brake system.

designed a composited braking system based on eddy current braking system and traditional hydraulic braking system. The experimental results proved that the composited braking system reduced braking distance obviously [6]. Lee and Park presented an ABS algorithm based on sliding mode control based on eddy current brake system, and the eddy current brake torque was derived from several aspects in the literature [7–10]. They mainly discussed the eddy current brake in high speed area.

In this paper, we propose a new conceptual hybrid braking system, and achieved the optimal combination of ECB and EHB. All of the research work, such as mathematical model building, controls strategy designing, and the hardware in the loop testing bench constructing, discusses about the structure of Figure 1. As illustrated in Figure 1, the hybrid system is composed of an eddy current braking system (ECB) and an electro-hydraulic braking system (EHB); the main parts of the system are hybrid brake disk (1), electromagnetic coil (14), copper layer (17), permanent magnet generator (4—stator coil, 6—permanent magnet, and 16—generator shell), bracket (9), hydraulic piston (8), and friction pad (7). Since the brake disk material is different for ECB and EHB, the brake disk of EHB should have good wear resistance; however, the brake disk of ECB should have good conductivity. Both of the ECB and EHB should have good heat dissipation performance. Therefore, through creative design to the mechanism of hybrid brake system, a new hybrid brake system has been developed. The advantage of this hybrid brake system is as follows.

(1) The brake disk of EHB utilizes outside face of the hybrid disk, the disk of ECB utilizes inner face of the hybrid disk, and the friction of EHB system will not influence ECB system, so the magnetic gap between electromagnetic coil and copper layers will not change forever and ECB system can keep its stability.

(2) Since different types of brake disks have different materiels, both the EHB and ECB can achieve the best performance by optimizing the design scheme themselves, respectively, in a whole unit.

(3) Permanent magnet generator, changing the kinetic energy of wheel into electricity, can supply power for ECB; the energy saving and environmental protection come true; this point will not be discussed in the paper.

(4) For both of the ECB and EHB have their braking merit, and the hybrid brake system can get all of the merits of the ECB system and EHB system, the whole performance of hybrid brake system is better than ECB or EHB separately.

In the work, we build several mathematical models; they are eddy current brake model, hydraulic brake model, brake disk model, and wheel force analysis model. Since the force distribution scheme is very important in hybrid ABS control strategy, these models are analysis tools for analyzing the braking force distribution between ECB and EHB. However, when we construct the hardware in the loop testing bench, a torque sensor is equipped to verify and modify theoretic value of brake torque.

The main objective of this hybrid control system is to maintain the wheel slip at an ideal value so that the tire can still generate lateral and steering forces as well as decrease the vehicle stopping distance; because the vehicle and tire model contain nonlinearities and uncertainties, a nonlinear control strategy based on the fuzzy theory was chosen for the slip ratio controlling. The paper presents a virtual fuzzy controller based on LabVIEW and Matlab to supervise ABS control strategy for eddy current and electro-hydraulic hybrid brake systems. On the testing bench, different types of braking system in the same road scenarios and different road scenarios were simulated to validate and analyze the hybrid brake system. The research result shows that the hybrid ABS has a better performance than traditional hydraulic brake system.

2. Hybrid Brake System Model

In order to analyze the braking force distribution between ECB and EHB, this work established four mathematical models as follows. These models mainly describe the relationship between brake torque, brake current, brake pressure, wheel speed, vehicle speed, and so forth.

2.1. Eddy Current Brake Model. Figure 2 shows the dimension parameter of ECB in hybrid brake system; according to Lee and Park [7], the eddy current brake torque can be expressed as

$$T_{bc} = T_i i^2 \omega, \tag{1}$$

where T_{bc} is the eddy current brake torque, i is the current of the coil, and ω is the angular velocity of the disk. The braking torque coefficient T_i is

$$T_i = \sigma_0 R_b^2 \left(\frac{\mu_0 N}{L}\right) SD, \tag{2}$$

where σ_0, μ_0, N, L, S, D, and R_b represent the electric conductivity, permeability of air, number of coil turns, air gap

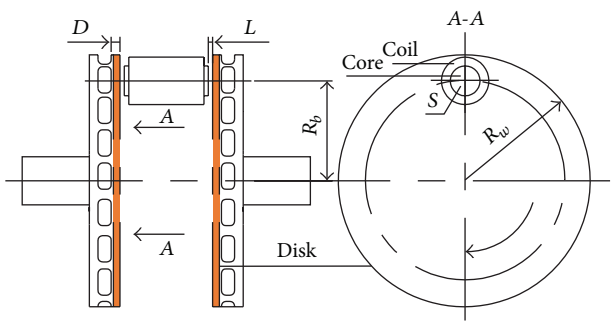

Figure 2: ECB parameters in the hybrid brake system.

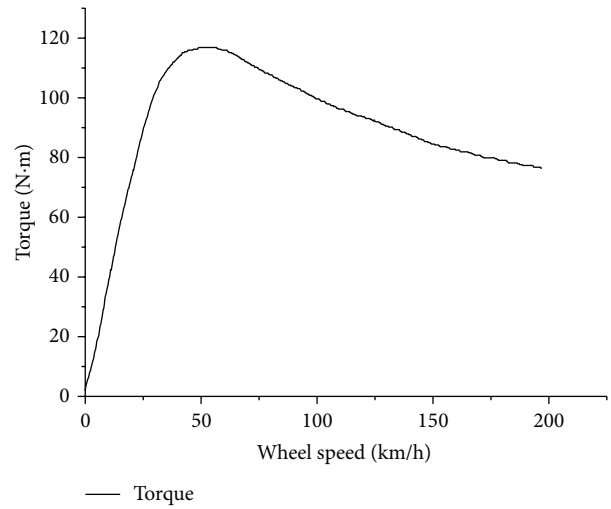

Figure 3: Torque versus rotor speed curve.

distance, cross-sectioned area of the core, the disk thickness, and the brake torque radius of the disk. However, because of the flux leakage, heat influences the disk. The coefficient T_i should be modified. According to Simeu and Georges [11],

$$T_i = \alpha C \sigma_0 R_b^2 \left(\frac{\mu_0 N}{L}\right) SD, \tag{3}$$

where α and C are the modified factors:

$$\alpha = 1 - \frac{1}{2\pi}\left[4\tan(\psi) + \psi \ln\left(1 + \frac{1}{\psi^2}\right) - \frac{1}{\psi}\ln\left(1 + \psi^2\right)\right],$$
$$C = 0.5\left[1 - \frac{AB}{\pi(1 + R_b/R_w)^2 (R_w - R_b)^2}\right]. \tag{4}$$

Here, A and B are the width and height of the iron cross-sectioned area and $\psi = B/A$.

Formula (1) indicates that the brake torque is proportional to the speed of brake disk when the current is kept constant. But the proportional relationship is broken as the disk speed increases. Figure 3 shows the torque versus rotor speed relationship tested on the testing bench. When the electric current in the coil keeps constant, the electromagnetic brake torque is not always proportional to rotor speed. There is a peak value on the curve, and the abscissa of this peak value is a critical speed. When rotor speed surpasses critical speed, the torque and speed have an inverse proportional relation. It is because the electromagnetic field produced by eddy current influences the external magnetic field [12]. Hence, when rotor speed surpasses the critical speed, the eddy current brake torque can be expressed as

$$T_{bc} = \frac{2\widehat{T}i}{v_k/v + v/v_k},$$
$$\widehat{T} = \left(\sqrt{\left(\frac{c}{\zeta}\right)\frac{\pi}{4}R_b^2}\sqrt{\left(\frac{L}{R_b}\right)}\right)\frac{N}{L}, \tag{5}$$
$$v_k = \frac{2}{\mu_0}\sqrt{\left(\frac{1}{c\xi}\right)\frac{\rho}{D}}\sqrt{\frac{L}{R_b}},$$

where v, v_k, c, ξ, and ρ represent the speed of brake disk, critical speed, scale factor, scale coefficient, and resistivity of brake disk [13–15].

Since the ECB in the hybrid brake system has two brake disks, the eddy current brake torque should be as follows. When $v < v_k$:

$$T_{bc} = 2\left\{1 - \frac{1}{2\pi}\left[4\tan(\psi) + \psi\ln\left(1 + \frac{1}{\psi^2}\right) - \frac{1}{\psi}\ln\left(1 + \psi^2\right)\right]\right\} \times \left(0.5\left[1 - \frac{AB}{\pi(1 + R_b/R_w)^2(R_w - R_b)^2}\right]\right) \times \sigma_0 R_b^2 \left(\frac{\mu_0 N}{L}\right) SD\, I^2 \omega. \tag{6}$$

When $v > v_k$:

$$T_{bc} = \frac{2}{v_k/v + v/v_k}\left(\sqrt{\left(\frac{c}{\zeta}\right)\frac{\pi}{4}R_b^2}\sqrt{\left(\frac{L}{R_b}\right)}\right)\frac{N}{L}. \tag{7}$$

2.2. Brake Disk Model. The brake disk model describes relationship between pressure of wheel cylinder and brake torque.

According to Chen et al. [16], the empirical model of brake torque and pressure can be expressed as

$$T_{bh} = \frac{p_w \mu}{k_\mu},$$
$$\mu = 0.3 + 0.12\exp\left[-\left(1.2492 - 0.0029v - 0.0814p_w\right)\right], \tag{8}$$

where T_{bh} is brake torque, p_w is brake pressure, μ is friction coefficient, k_μ is calculation coefficient (2.099), and v is vehicle speed.

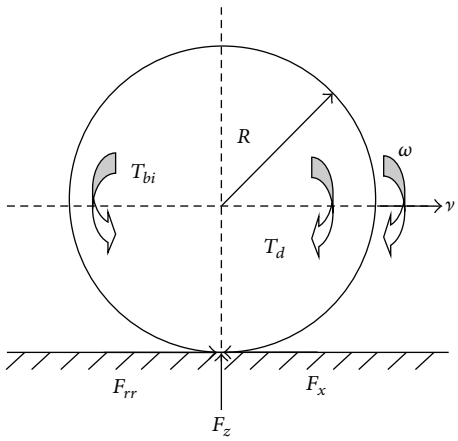

Figure 4: Wheel dynamics in braking.

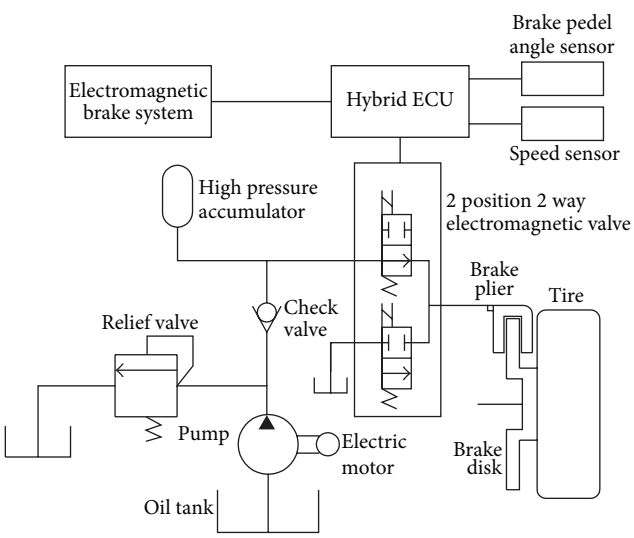

Figure 5: Hydraulic circuit diagram of EHB system.

2.3. Wheel Model. In order to analyze the performance of the hybrid brake system with varying torque characteristics, a vehicle wheel model is needed. It is assumed that vehicle lateral, vertical, roll, and yaw dynamics are negligible for the braking application. As shown in Figure 4, the wheel rotational dynamics are given by the following equation:

$$\sum M_y = T_{bi} - F_x R + F_{rr} R - T_d = -I_\omega \dot{\omega}, \qquad T_{bi} = T_{bc} + T_{bh}, \tag{9}$$

where T_{bi} is brake torque of ECB and EHB, T_{bc} is brake torque of ECB, T_{bh} is brake torque of EHB, F_x is longitudinal friction force at tire contact patch, F_{rr} is rolling resistance at tire contact patch, T_d is drive torque, I_ω is wheel rotational inertia, $\dot{\omega}$ is angular acceleration of wheel, R is wheel radius.

2.4. Hydraulic Brake Model. Figure 5 shows a hydraulic circuit diagram of EHB system; because the hydraulic brake system has too many circuits, solenoid and the other parts, it is difficult to establish an exact mathematical model to simulate and control the brake progress. In this work, an actual electronic hydraulic braking system which has hydraulic circuits, solenoid valve, and ECU has been utilized to simulate the brake progress. In the braking system, there is a high pressure accumulator to keep steady pressure. The hybrid ECU can control the brake pressure of wheel cylinder by opening or closing the electromagnetic valves. Hence, hybrid ECU can adjust brake pressure of the wheel cylinder easily. The key technique of the hydraulic brake system is to control the electromagnetic valve rapidly according to the slip ratio.

According to MK20-I type ABS hydraulic modulator [17], the model of the throttle characteristics is

$$\frac{dp_w}{dt} = \begin{cases} 35.7418(p_m - p_w)^{0.58} & \text{Pressure increase} \\ 0 & \text{Pressure holding} \\ -36.3714 p_w^{0.92} & \text{Pressure relief.} \end{cases} \tag{10}$$

3. The Control Strategy of Hybrid Brake System

The controller of hybrid brake system adopts nonlinear fuzzy strategy; when ABS works, fuzzy controller will track the optimal objective slip ratio and eliminate the tracking error [18, 19] in order to achieve a good steady-state response. As shown in Figure 6, the hybrid ABS controller will decide the driver's intention based on the feedback of the displacement and acceleration of the brake pedal sensor and then output calculated total torque gradually to objective brake torque. According to the analysis of braking force distribution between ECB and EHB, the torque proportion of ECB and EHB should be 1 : 1.5. As the process of braking torques increasing, the controller always detects slip ratio of wheels synchronously. If the slip ratio does not reach theoretic optimal value (0.2), the hybrid system was located in normal braking state, and the brake force is proportional to displacement of brake pedal. Once the slip ratio reaches 0.2, the controllers antilock control program will work. The basic control strategy of the hybrid brake system is to keep the hydraulic brake pressure at a stationary value when the slip ratio reaches 0.2 and keep the optimal slip ratio (0.2) by adjusting the current of ECB.

There are two input parameters and one output parameter in the fuzzy controller; one of the input parameters is difference value ($e(t)$):

$$e(t) = \lambda_f(t) - \lambda_r(t), \tag{11}$$

λ_f is objective slip ratio, λ_r is actual slip ratio.

The second input parameter is change rate ($\Delta e(t)$) of difference value:

$$\Delta e(t) = e(t) - e(t - T), \tag{12}$$

where $e(t)$ is sample at the moment of t, $e(t - T)$ is sample at the previous time $(t - T)$.

The output parameter of fuzzy controller is current change (i) of electromagnetic brake system. The difference

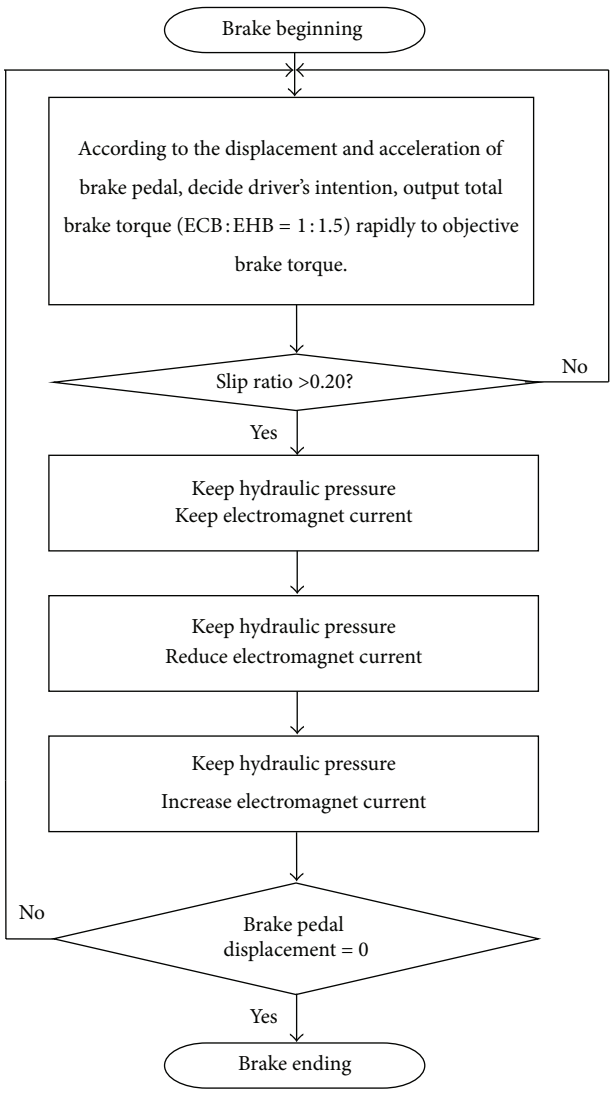

Figure 6: Control strategy of hybrid system.

value universe (E) is $[-6, 6]$, the change rate universe (EC) is $[-6, 6]$, and the current change universe (TU) is $[0, 40]$. The values are as follows [20]:

$$E = \{\text{NB NM NS NW Z PW PS PM PB}\},$$

$$EC = \{\text{NB NM NS Z PS PM PB}\},$$

$$TU = \{\text{NB NM NS NW Z PW PS PM PB}\}.$$

If the difference value is NB, the change rate value is NB. It indicates that the slip ratio now is very high and the eddy current brake torque should be reduced quickly. The output value of current is NB. However, if the difference value is PB, then the change rate value is PB. It indicates that the slip ratio now is very low and the eddy current brake torque should be increased quickly. The output value of current is PB. If the difference value is PW, then the change rate value is PS. It indicates that the slip ratio now is little bigger than the optimal value. At this moment, the eddy current brake torque should not be changed [21]. The output value of current is Z. The fuzzy control strategy rule is as shown in Table 1.

4. HILS System Design Based on LabVIEW and Matlab

Figure 7(a) is a sketch of the HILS system of ECB&EHB hybrid brake system. The hardware of the HILS system consists of hybrid brake system, sensor nets, driving device, battery, data acquisition board, personal computer, and so forth [22]. The software of the HILS system consists of Matlab mathematical operating progress of the hybrid brake model and the LabVIEW controlling program. The main role of software part is to define a brake system model and carry out the real-time simulation.

Figure 7(b) shows the interface of the hybrid brake system testing bench based on LabVIEW and Matlab [23]. In the model of data processing, by compiling the functions in the Math Library of Matlab C/C++ into dynamic-link library (DLL), the sharing function library for data processing was established. LabVIEW can compile the calculation method and control algorithm to control program by calling DLL easily.

Control commands of virtual controller in personal computer are sent via data acquisition board (USB-6341) and driving device to hybrid brake system. The brake pedal position sensor, wheel speed sensor, torque sensor, and other sensor signals are sent to virtual controller through sensor nets and data acquisition board. On the actual testing bench, two tires are used to simulate the driving wheel and road. The tire that simulates road can package different materials to adapt different road conditions. Torque sensor was equipped to test the torque of hybrid brake system.

The performance of the ABS HILS was developed and tested under the previous environments and conditions (Table 2) vehicle parameters are listed in Table 3. The target of the control program is to hold the desired slip ratio as 0.2.

5. Experimental Results and Discussion

In order to analyze the performance of the hybrid brake system, different type of brake systems (ECB, EHB, and ECB & EHB) experiment in the same road scenarios and different road scenarios (dry and wet asphalt roads) experiment have been made to validate the hybrid brake system on the testing bench.

5.1. Dry Asphalt Road Test. Dry asphalt road has high friction coefficient for braking system, approximately 0.8. Figure 8 shows the results of ECB, EHB, and ECB & EHB braking experiments on dry asphalt road. The initial velocity of vehicle is 100 Km/h. Figures 8(a), 8(c), and 8(e) show the time responses of the slip ratio tracking of the vehicle, and Figures 8(b), 8(d), and 8(f) show the velocity of vehicle decelerating by the ECB, EHB, and hybrid ECB & EHB systems.

When sudden stop action occurs, Figure 8(a) shows the slip ratio of ECB system is very low. When the wheel speed decreases, the brake torque of ECB reduces, too, and the slip

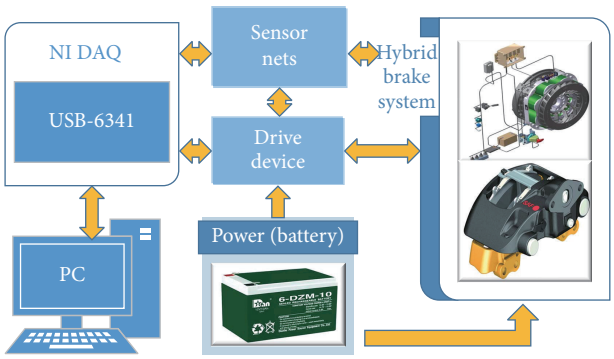

(a) Sketch for the HILS system

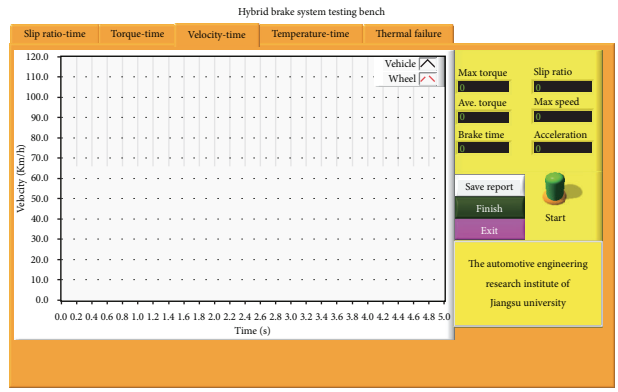

(b) Interface of the testing bench

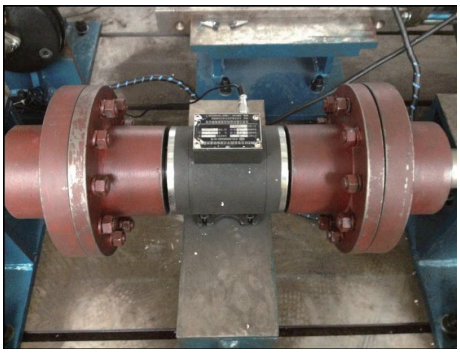

(c) Torque sensor of the testing bench

(d) Panorama of the testing bench

(e) Frequency transformer, Instrument, and Power

(f) Data acquisition board (USB-6341)

Figure 7: HILS system design based on LabVIEW and Matlab.

ratio of ECB cannot reach 0.2. Hence, the vehicle speed and wheel speed are approached to each other in Figure 8(b), and the curve is smoother than that of Figure 8(c). Due to the possible hydraulic impact, there is little abnormal fluctuation on the slip ratio curve of Figure 8(c). Figure 8(d) shows the difference between vehicle speed and wheel speed; it is a little big. Figures 8(e) and 8(f) show the slip ratio and speed curve of hybrid system. The slip ratio of EHB and hybrid ECB & EHB can stabilize at 0.20, but the hybrid system is more stable than EHB.

From the aspect of braking time, Figure 8(b) shows that ECB has a more rapid response than other brake systems. When brake action occurs, ECB responds immediately, but its wheel speed has no locking trend. Figure 8(d) shows that EHB has a slower response than other brake systems. It is almost delayed 0.3s comparing to ECB system. EHB has better brake effect than ECB; its wheel speed has obvious change, and the wheel keeps a critical condition of locking. The whole braking time only needs 5.1s. Because the ECB & EHB hybrid system has all of the merits of the ECB and EHB systems,

Table 1

TU					E				
	NB	NM	NS	NW	Z	PW	PS	PM	PB
EC									
NB	NB	NB	NM	NM	Z	NS	NS	NS	NS
NM	NB	NB	NS	NS	Z	NW	Z	Z	PW
NS	NB	NM	NW	NW	Z	Z	Z	PW	PS
Z	NM	NS	NW	NW	Z	Z	PW	PS	PM
PS	NS	NW	Z	Z	Z	PW	PW	PM	PM
PM	NW	Z	PW	PW	Z	PS	PS	PM	PB
PB	Z	Z	PS	PS	Z	PM	PM	PB	PB

Table 2: Hybrid brake system testing conditions.

Road	Condition	Friction	Velocity	Target slip ratio
Dry road	Dry asphalt	0.8	100 Km/h	0.2
Wet road	Wet asphalt	0.5	100 Km/h	0.2

Table 3: Vehicle parameters that were simulated on testing bench.

Vehicle parameters	Parameter value
Mass of the vehicle m/kg	1 300
Wheel effective rolling radius R/m	0.255
Wheel rotational inertia I_ω/(kg·m^2)	1.58/1.02

Figure 8(e) shows it has a rapid response to braking action, almost immediately. The wheel speed has an obvious variety. The wheel keeps a critical condition of locking, too. The wheel speed is more stable than EHB system; the whole braking time only needs 4.6 s.

5.2. Wet Asphalt Road Test. Wet asphalt road has a smaller friction coefficient than dry road, approximately 0.5. With the same initial braking velocity, Figures 9(a), 9(c), and 9(e) show the time responses of the slip ratio tracking of the vehicle, and Figures 9(b), 9(d), and 9(f) show the velocity of vehicle decelerating by the ECB, EHB, and hybrid ECB & EHB systems.

Figure 9(a) shows the slip ratio on wet road is a little bigger than that of Figure 8(a); the speed difference between wheel and vehicle on wet road is also much larger than that on dry road by comparing Figure 9(b) to Figure 8(b). The slip ratio and speed of EHB on wet road have not too much difference from Figures 9(c) and 9(d) to Figures 8(c) and 8(d). So the performance of EHB has little difference on dry and wet roads. The slip ratio and speed curves on wet road in Figures 9(e) and 9(f) present the same controlling trend as Figures 8(e) and 8(f); it indicates that the fuzzy controller has a robust control in hybrid brake system.

The braking time on wet road has similar results to dry road. ECB has a more rapid response than other brake systems, but its brake time reaches 13.2 seconds. EHB has a slower response than other brake systems; its whole braking time only needs 7 s. The ECB&EHB also has a rapid response to braking action; the whole braking time only needs 5.6 s.

6. Conclusions

In this paper, we discussed the brake performance analysis of ABS for ECB and EHB hybrid brake system. First, we designed a new conceptual hybrid braking system that achieved the optimal combination of ECB and EHB. Based on the structure of the hybrid brake system, mathematical model was built to calculate the torque character of ECB and EHB, and we analyzed the braking force distribution between two kinds of brake systems. Second, a fuzzy controller on personal computer based on Labview and Matlab was designed and hardware in the loop system was constructed to validate and analyze the performance of the hybrid brake system. Through lots of experiments on dry and wet asphalt road, as shown in Figure 10, the result indicates the following.

(1) The response of hybrid brake system is better than that of traditional hydraulic braking system. It enhances about 0.3 s more than hydraulic braking system.

(2) Due to the merits of the hybrid brake system and the best slip ratio regulation of fuzzy controller, the curve of slip ratio of hybrid brake system is more stable than EHB, and the ability to track objective slip ratio is better than that of EHB, too. Therefore, the adhesion utilization of hybrid brake system is bigger than that of EHB in the whole braking time.

(3) Comparing EHB, the total brake time of hybrid brake system reduces to 0.5 s at the speed of 100 Km/h on dry asphalt road and to 1.4 s on wet asphalt road.

(4) For the brake distribution of the contactless braking system (ECB), the abrasion, noise, harmful friction dust, and the risk of thermal failure in hybrid brake system were reduced obviously.

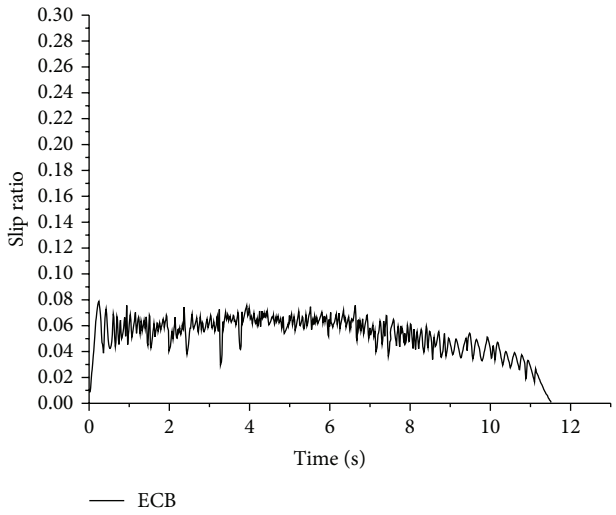

(a) Slip ratio of ECB

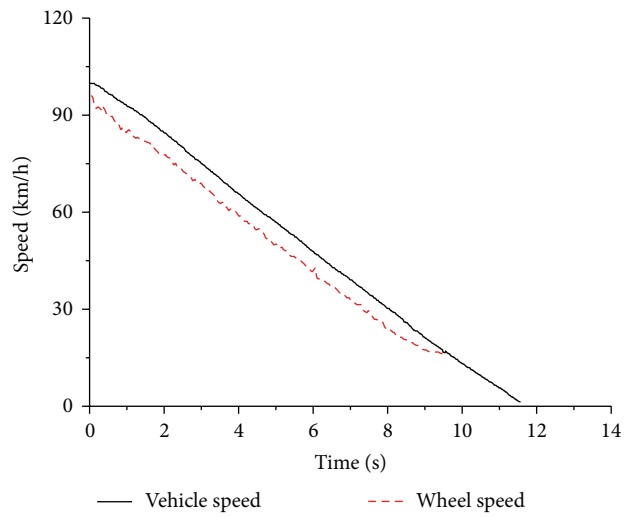

(b) Velocity of ECB

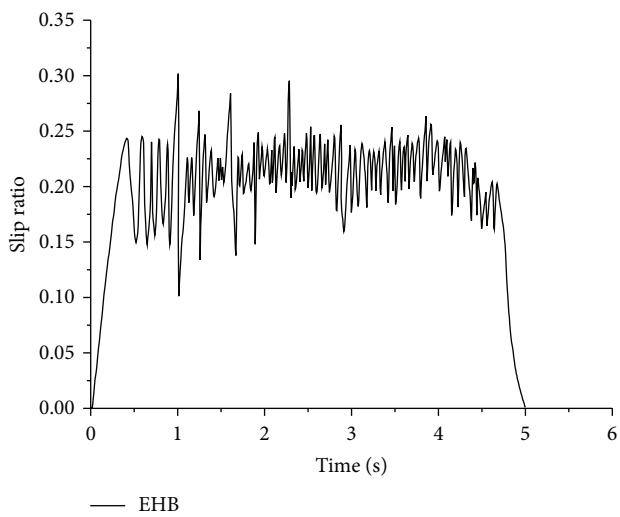

(c) Slip ratio of EHB

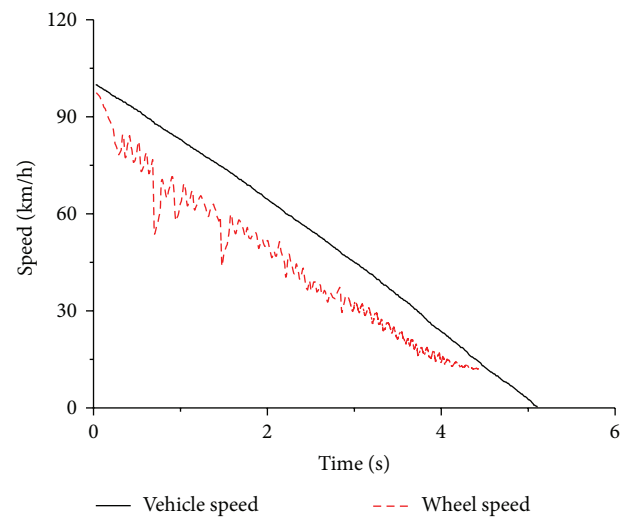

(d) Velocity of EHB

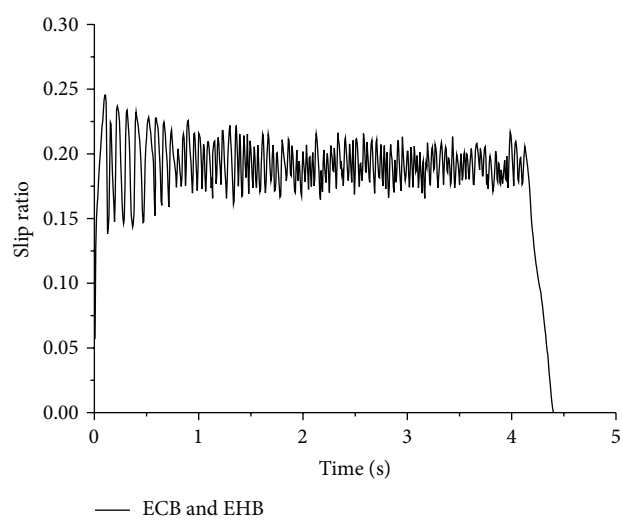

(e) Slip ratio of hybrid ECB and EHB

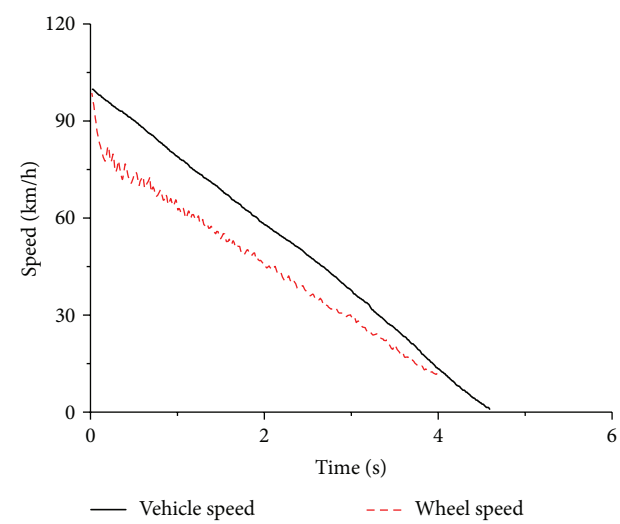

(f) Velocity of hybrid ECB and EHB

Figure 8: Results of ECB, EHB, and ECB & EHB braking experiments on dry asphalt road.

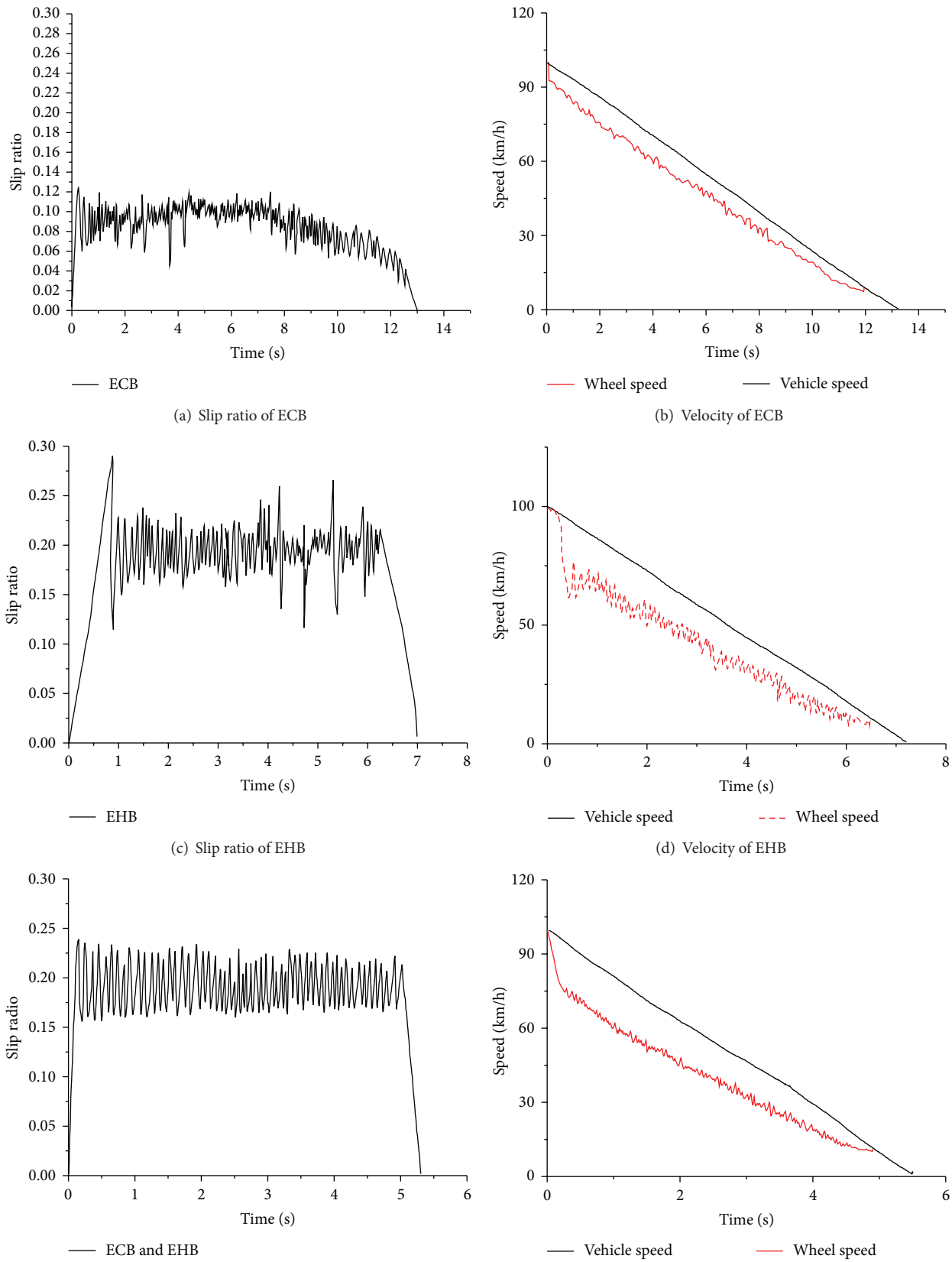

(a) Slip ratio of ECB

(b) Velocity of ECB

(c) Slip ratio of EHB

(d) Velocity of EHB

(e) Slip ratio of hybrid ECB and EHB

(f) Velocity of hybrid ECB and EHB

Figure 9: Results of ECB, EHB, and ECB & EHB braking experiments on wet asphalt roads.

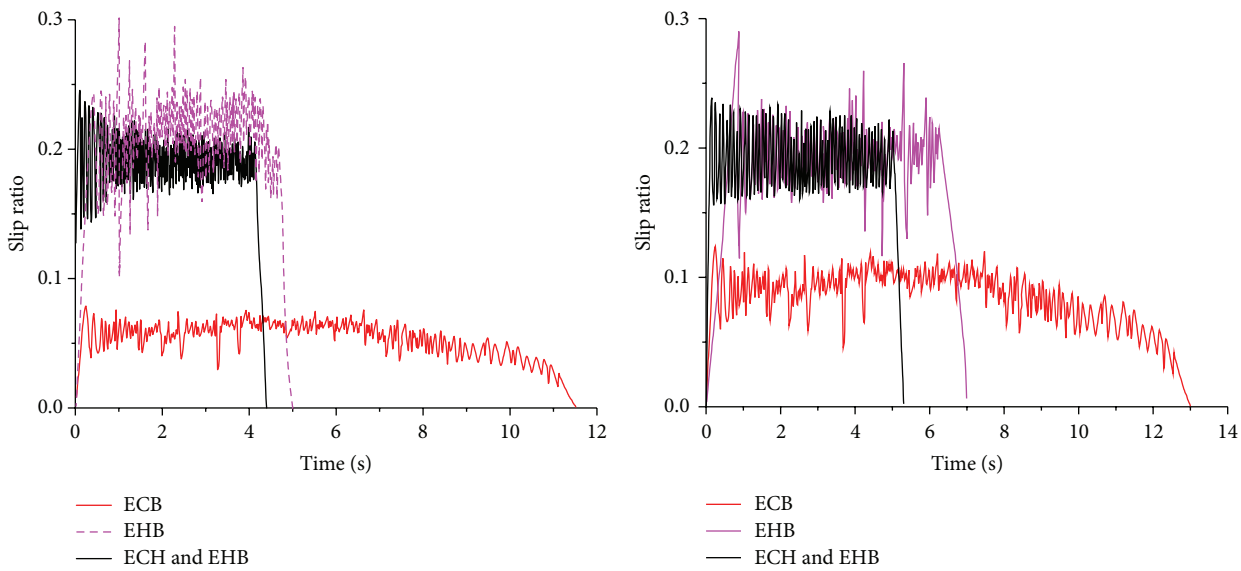

(a) Slip ratio comparison on dry asphalt road

(b) Slip ratio comparison on wet asphalt road

Figure 10: Slip comparison of ECB, EHB, and ECB & EHB on different road scenarios.

Conflict of Interests

The authors declare that there is no conflict of interests regarding the publication of this paper.

Acknowledgments

This work is supported by National Natural Science Foundation of China (no. 51275212), the 2012 Jiangsu Province Post-graduate Innovative Fund Project (CXZZ12_0664), and the 2012 Jiangsu Province Key Laboratory of Automotive Engineering (QC201203).

References

[1] G. G. Desta, "Eddy Current Brake System," 2004, US 6,698,554 B2.

[2] S. Anwar and B. Zheng, "An antilock-braking algorithm for an eddy-current-based brake-by-wire system," *IEEE Transactions on Vehicular Technology*, vol. 56, no. 3, pp. 1100–1107, 2007.

[3] S. Anwar and R. C. Stevenson, "Torque characteristics analysis of an Eddy current electric machine for automotive braking applications," in *Proceedings of the American Control Conference*, pp. 3996–4001, June 2006.

[4] S. E. Gay, *Contactless Magnetic Brake for Automotive Applications*, Texas A&M University, 2005.

[5] J. Song, "Performance evaluation of a hybrid electric brake system with a sliding mode controller," *Mechatronics*, vol. 15, no. 3, pp. 339–358, 2005.

[6] R. He, C. Liu, and N. Li, "Fuzzy control of the integrated system of electromagnetic brake and friction brake of car," *Journal of Mechanical Engineering*, vol. 46, no. 24, pp. 83–87, 2010.

[7] K. Lee and K. Park, "Optimal robust control of a contactless brake system using an eddy current," *Mechatronics*, vol. 9, no. 6, pp. 615–631, 1999.

[8] K. Lee and K. Park, "Modeling Eddy currents with boundary conditions by using Coulomb's law and the method of images," *IEEE Transactions on Magnetics*, vol. 38, no. 2, pp. 1333–1340, 2002.

[9] K. Lee Jr. and K. Park, "Modeling of the Eddy currents with the consideration of the induced magnetic flux," in *Proceedings of the IEEE Region 10th International Conference on Electrical and Electronic Technology*, pp. 762–768, August 2001.

[10] K. Lee and K. Park, "Contactless eddy current brakes for cars: United States," US6,286,637, 9.11, 2001.

[11] E. Simeu and D. Georges, "Modeling and control of an eddy current brake," *Control Engineering Practice*, vol. 4, no. 1, pp. 19–26, 1996.

[12] W. R. Swythe, "On eddy current in a rotating disk," *Transactions of the AIEE*, vol. 61, pp. 681–684, 1942.

[13] J. H. Wouterse, "Critical torque and speed of eddy current brake with widely separated soft iron poles," *IEE Proceedings B*, vol. 138, no. 4, pp. 153–158, 1991.

[14] O. Bottauscio, M. Chiampi, and A. Manzin, "Modeling analysis of the electromagnetic braking action on rotating solid cylinders," *Applied Mathematical Modelling*, vol. 32, no. 1, pp. 12–27, 2008.

[15] A. Younis, K. Karakoc, Z. Dong, E. Park, and A. Suleman, "Application of SEUMRE global optimization algorithm in automotive magnetorheological brake design," *Structural and Multidisciplinary Optimization*, vol. 44, no. 6, pp. 761–772, 2011.

[16] H. Chen, J. Song, T. Wang, and L. Ren, "Exponential function model of friction characteristics of a disc brake," *Transactions of the Chinese Society of Agricultural Machinery*, vol. 33, no. 5, pp. 79–83, 2002.

[17] D. Peng, Y. Zhang, C.-L. Yin, and J.-W. Zhang, "Combined control of a regenerative braking and antilock braking system for hybrid electric vehicles," *International Journal of Automotive Technology*, vol. 9, no. 6, pp. 749–757, 2008.

[18] H. Zhang, Y. Shi, and M. Liu, "H_∞ Step tracking control for networked discrete-time nonlinear systems with integral and

predictive actions," *IEEE Transactions on Industrial Informatics*, vol. 9, no. 1, pp. 337–345, 2013.

[19] Z. Shuai, H. Zhang, and J. Wang, "Combined AFS and DYC control of four-wheel-independent-drive electric vehicles over CAN network with time-varying delays," *IEEE*, 2013.

[20] C. Jun, "A study on robust control for anti-lock braking system," *Automotive Engineering*, vol. 1, pp. 17–22, 1998.

[21] L. Zhengdong, W. Man, and Y. Jianying, "Nonlinear robust control of a hypersonic flight vehicle using fuzzy disturbance observer," *Mathematical Problems in Engineering*, vol. 2013, Article ID 369092, 10 pages, 2013.

[22] L. Yi, S. Chen, and W. Jun, "A simulation study on fuzzy control of anti-lock characteristic of brake-by-wire system," *Journal of Highway and Transportation Research and Development*, vol. 10, pp. 124–127, 2006.

[23] W. Zhang, N. Ding, M. Chen, G. Yu, and X. Xu, "Development of a low-cost hardware-in-the-loop simulation system as a test bench for anti-lock braking system," *Chinese Journal of Mechanical Engineering*, vol. 24, no. 1, pp. 98–104, 2011.