Hindawi Publishing Corporation
Mathematical Problems in Engineering
Volume 2014, Article ID 352426, 6 pages
http://dx.doi.org/10.1155/2014/352426

Research Article

State Estimator Design of Generalized Liu Systems with Application to Secure Communication and Its Circuit Realization

Yeong-Jeu Sun

Department of Electrical Engineering, I-Shou University, Kaohsiung 840, Taiwan

Correspondence should be addressed to Yeong-Jeu Sun; yjsun@isu.edu.tw

Received 8 October 2013; Revised 17 February 2014; Accepted 27 February 2014; Published 26 March 2014

Academic Editor: Xing-Gang Yan

The generalized Liu system is firstly introduced and the state observation problem of such a system is explored. A simple state estimator for the generalized Liu system is developed to guarantee the global exponential stability of the resulting error system. Applications of proposed state estimator strategy to chaotic secure communication, circuit implementation, and numerical simulations are provided to show the effectiveness and feasibility of the obtained results. Besides, the guaranteed exponential convergence rate of the proposed state estimator and that of the proposed chaotic secure communication can be precisely calculated.

1. Introduction

Frequently, it is either inappropriate or impossible to measure all the elements of the state vector. In particular, states estimator is more intricate when system is chaotic, nonlinear, or stochastic in model or parameters. Estimating system states has come to take its pride of place in system identification, control design, and filter theory, which has taken up engineers' attention from early 1960s. Recently, a wide variety of methodologies have been proposed for the estimator design of systems, such as sliding-mode observer (SMO), Chebyshev neural network (CNN), separation principle, frequency domain analysis, and passivation of error dynamics. For more detailed knowledge, one can refer to [1–9] and the references therein. As usual, most of the observer designs focus on high tracking accuracy and the fast response. For the fast response, the use of a sigmoid function in a boundary layer is particularly popular. Nevertheless, the observer error cannot be guaranteed to converge to zero within the boundary layer [1].

Because chaotic system is highly sensitive to initial conditions and the output behaves like a random signal, several kinds of chaotic systems have been widely applied in various applications such as secure communication, ecological systems, system identification, master-slave chaotic systems, chemical reactions, and biological systems; see, for instance, [10–21] and the references therein. Recently, various problems of chaotic Liu system have been investigated; see, for example, [11–21]. In [12], by geometric analysis, it has been shown that the basin of attraction of the Liu attractor has riddled property, leading to the conclusion that it has a strange attractor in the sense of Milnor. In [21], by means of Routh-Hurwitz criteria, a feedback strategy has been proposed for stabilizing the unstable equilibrium points of Liu chaotic system. Besides, based on Lyapunov stability theory, an adaptive control law has been offered in [20] to achieve the antisynchronization between Liu system and Rössler system with unknown parameters.

In this paper, the state estimator of the generalized Liu system is firstly introduced and studied. A simple state estimator for such systems is provided to guarantee the global exponential stability of the resulting error system. Moreover, the guaranteed exponential convergence rate can be accurately estimated. Applications of proposed state observer scheme to secure communication, circuit implementation, and numerical simulations are offered to evidence the utility and effectiveness of the main results.

This rest of the paper is organized as follows. The problem formulation and main result are presented in Section 2. Several numerical simulations and implementation of electronic

circuits are given in Section 3 to demonstrate the presented schemes. Finally, some conclusions are drawn in Section 4.

2. Problem Formulation and Main Result

In this paper, we consider the following generalized Liu system:

$$\dot{x}_1(t) = f_1(x_1) + f_4(x_2), \tag{1a}$$

$$\dot{x}_2(t) = f_2(x_1, x_2, x_3), \tag{1b}$$

$$\dot{x}_3(t) = -ax_3 + f_3(x_1), \tag{1c}$$

$$y(t) = cx_1(t), \quad \forall t \geq 0, \tag{1d}$$

where $x(t) := [x_1(t)\ \ x_2(t)\ \ x_3(t)]^T \in \mathfrak{R}^{3\times 1}$ is the state vector, $y(t) \in \mathfrak{R}$ is the system output, and a and c are the system parameters with $a > 0$ and $c \neq 0$. For the existence and uniqueness of the system ((1a), (1b), (1c), and (1d)), we assume that all of functions $f_i(\cdot)$, for all $i \in \{1, 2, 3, 4\}$, are sufficiently smooth with f_4 being an invertible function. It goes without saying that since states are not always available for direct measurement, states must be estimated. The aim of this paper is to search a state estimator for the system ((1a), (1b), (1c), and (1d)) such that the global exponential stability of the resulting error systems can be guaranteed. In what follows, A^T is used to denote the transpose for a matrix A, $\|x\| := \sqrt{x^T \cdot x}$ denotes the Euclidean norm of the column vector x, and $|a|$ denotes the absolute value of a real number a.

Before presenting the main result, let us introduce a definition which will be used in the main theorem.

Definition 1. The system ((1a), (1b), (1c), and (1d)) is exponentially state reconstructible if there exist a state estimator $E\dot{z}(t) = f(z(t), y(t))$ and positive numbers k and α such that

$$\|e(t)\| := \|x(t) - z(t)\| \leq k \exp(-\alpha t), \quad \forall t \geq 0, \tag{2}$$

where $z(t)$ expresses the reconstructed state of the system ((1a), (1b), (1c), and (1d)). In this case, the positive number α is called the exponential convergence rate.

Remark 2. It is noted that the chaotic Liu system,

$$\dot{x}_1(t) = -10x_1(t) + 10x_2(t), \tag{3a}$$

$$\dot{x}_2(t) = 40x_1(t) - x_1(t)x_3(t), \tag{3b}$$

$$\dot{x}_3(t) = -2.5x_3(t) + x_1^2(t) \tag{3c}$$

$$y(t) = cx_1(t), \quad \forall t \geq 0, \tag{3d}$$

is the special cases of system ((1a), (1b), (1c), and (1d)) with

$$\begin{aligned} &f_1(x_1) = -10x_1, \qquad f_2(x_1, x_2, x_3) = 40x_1 - x_1x_3, \\ &f_3(x_1) = x_1^2, \qquad f_4(x_2) = 10x_2, \qquad a = 2.5. \end{aligned} \tag{4}$$

Now we present the main result for the state estimator of system ((1a), (1b), (1c), and (1d)).

Theorem 3. *The system ((1a), (1b), (1c), and (1d)) is exponentially state reconstructible. Besides, a suitable state estimator is given by*

$$z_1(t) = \frac{1}{c} \cdot y(t), \tag{5a}$$

$$z_2(t) = f_4^{-1}\left(\frac{1}{c}\dot{y} - f_1\left(\frac{y}{c}\right)\right), \tag{5b}$$

$$\dot{z}_3(t) = -az_3 + f_3\left(\frac{y}{c}\right), \tag{5c}$$

where $f_4^{-1}(\cdot)$ denotes the inverse function of $f_4(\cdot)$. In this case, the guaranteed exponential convergence rate is given by $\alpha := a$.

Proof. From ((1a), (1b), (1c), (1d), (3a), (3b), (3c), and (3d)) with

$$e_i(t) := x_i(t) - z_i(t), \quad \forall i \in \{1, 2, 3\}, \tag{6}$$

it can be readily obtained that

$$\begin{aligned} e_1(t) &= x_1(t) - z_1(t) \\ &= x_1(t) - \frac{y(t)}{c} \\ &= x_1(t) - x_1(t) = 0, \quad \forall t \geq 0; \\ e_2(t) &= x_2(t) - z_2(t) \\ &= x_2(t) - f_4^{-1}\left(\frac{1}{c}\dot{y} - f_1\left(\frac{y}{c}\right)\right) \\ &= x_2(t) - f_4^{-1}(\dot{x}_1 - f_1(x_1)) \\ &= x_2(t) - f_4^{-1}(f_4(x_2)) \\ &= x_2(t) - x_2(t) = 0, \quad \forall t \geq 0; \\ \dot{e}_3(t) &= \dot{x}_3(t) - \dot{z}_3(t) \\ &= -ax_3 + f_3(x_1) + az_3 - f_3\left(\frac{y}{c}\right) \\ &= -a(x_3 - z_3) + f_3(x_1) - f_3\left(\frac{y}{c}\right) \\ &= -ae_3 + f_3(x_1) - f_3(x_1) \\ &= -ae_3(t), \quad \forall t \geq 0. \end{aligned} \tag{7}$$

It follows that

$$\begin{aligned} &\frac{d[e_3(t)\exp(at)]}{dt} = 0 \\ &\Longrightarrow e_3(t)\exp(at) = e_3(0)\exp(a0) \\ &\Longrightarrow e_3(t) = \exp(-at)e_3(0) \\ &\Longrightarrow |e_3(t)| = |e_3(0)| \cdot \exp(-at), \quad \forall t \geq 0. \end{aligned} \tag{8}$$

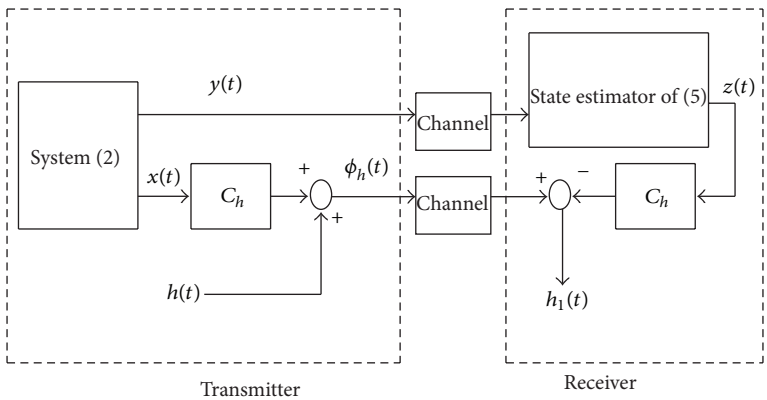

Figure 1: Chaotic secure communication system ($h(t)$ is the information vector and $h_1(t)$ is the recovered vector).

As a result, we conclude that

$$\begin{aligned}\|e(t)\| &= \sqrt{e_1^2(t)+e_2^2(t)+e_3^2(t)}\\ &\le |e_3(0)|\cdot\exp(-at), \quad \forall t\ge 0.\end{aligned} \tag{9}$$

This completes the proof. □

By Theorem 3 with ((3a), (3b), (3c), and (3d)), it is straightforward to obtain the following result.

Corollary 4. *The chaotic Liu system ((3a), (3b), (3c), and (3d)) is exponentially state reconstructible. Besides, a suitable state estimator is given by*

$$z_1(t) = \frac{1}{c}\cdot y(t), \tag{10a}$$

$$z_2(t) = \frac{0.1}{c}\dot{y}(t) + \frac{1}{c}y(t), \tag{10b}$$

$$\dot{z}_3(t) = -2.5z_3 + \frac{1}{c^2}\cdot y^2(t). \tag{10c}$$

In this case, the guaranteed exponential convergence rate is given by $\alpha := 2.5$.

3. Application with Numerical Simulations

For any information vector $h(t)$ in the transmitter system, the objective of secure communication system is to recover the message $h(t)$ in the receiver system. Let us consider the following chaotic secure communication system and the proposed scheme is illustrated in Figure 1.

Transmitter. One has

$$\dot{x}_1(t) = -10x_1(t) + 10x_2(t), \tag{11a}$$

$$\dot{x}_2(t) = 40x_1(t) - x_1(t)x_3(t), \tag{11b}$$

$$\dot{x}_3(t) = -2.5x_3(t) + x_1^2(t), \tag{11c}$$

$$y(t) = cx_1(t), \tag{11d}$$

$$\phi_h(t) = C_h x(t) + h(t). \tag{11e}$$

Receiver. One has

$$z_1(t) = \frac{1}{c}\cdot y(t), \tag{12a}$$

$$z_2(t) = \frac{0.1}{c}\dot{y}(t) + \frac{1}{c}y(t), \tag{12b}$$

$$\dot{z}_3(t) = -2.5z_3 + \frac{1}{c^2}\cdot y^2(t), \tag{12c}$$

$$h_1(t) = \phi_h(t) - C_h z(t), \tag{12d}$$

where $x(t) := [x_1(t)\ x_2(t)\ x_3(t)]^T \in \mathfrak{R}^{3\times 1}$, $z(t) := [z_1(t)\ z_2(t)\ z_3(t)]^T \in \mathfrak{R}^{3\times 1}$, $h(t) \in \mathfrak{R}^{q\times 1}$ is the information vector, $C_h \in \mathfrak{R}^{q\times 1}$, $h_1(t) \in \mathfrak{R}^{q\times 1}$ is the signal recovered from $h(t)$, with $c \ne 0$ and $q \in N$. By Theorem 3 and Corollary 4 with ((5a), (5b), (5c)–(10a), (10b), and (10c)), one can see that

$$\begin{aligned}\|h_1(t) - h(t)\| &= \|\phi_h(t) - C_h z(t) - \phi_h(t) + C_h x(t)\|\\ &\le \|C_h\|\cdot\|e(t)\|\\ &\le |e_3(0)|\cdot\|C_h\| e^{-at}\\ &= |e_3(0)|\cdot\|C_h\| e^{-2.5t}, \quad \forall t\ge 0.\end{aligned} \tag{13}$$

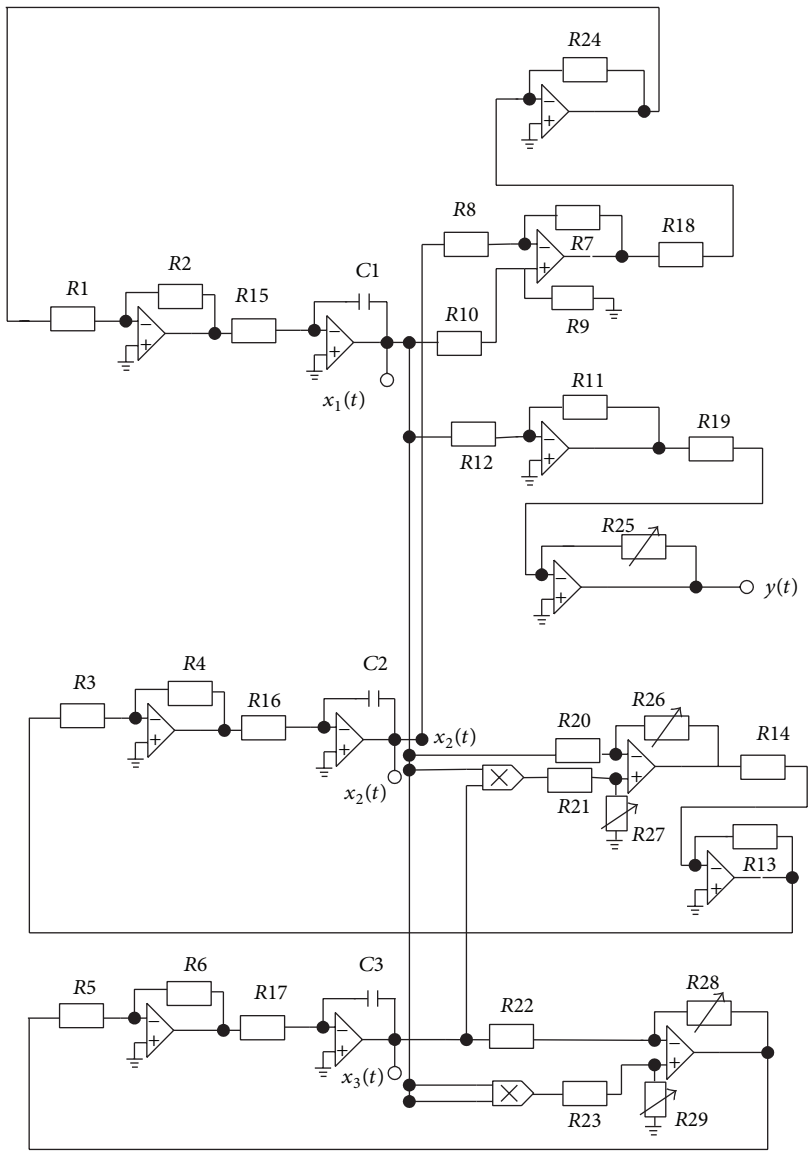

Figure 2: The diagram of implementation of the chaotic Liu system ((3a), (3b), (3c), and (3d)), where $C1 = C2 = C3 = 1\,\mu$F, $Ri = 10\,\text{k}\Omega$, for all $i \in \{2, 4, 6, 7, 8, 9, 10, 11, 12, 13, 14, 18, 19, 20, 21, 22, 23\}$, $Ri = 100\,\text{k}\Omega$, for all $i \in \{1, 3, 5, 15, 16, 17, 24\}$, $R25 = 20\,\text{k}\Omega$, $R26 = R27 = 400\,\text{k}\Omega$, $R28 = R29 = 25\,\text{k}\Omega$.

This implies that one can recover the message $h(t)$ in the receiver system, with the guaranteed exponential convergence rate $\alpha = 2.5$. In brief, the synchronization of signals $h(t)$ and $h_1(t)$ for the proposed chaotic secure communication (11a), (11b), (11c), (11d), and (11e) and (12a), (12b), (12c), and (12d) can always be achieved with the guaranteed convergence rate $\alpha = 2.5$.

With, for example, $c = 2$, $C_h = \begin{bmatrix} 1 & 0 & 1 \\ 0 & 2 & 2 \\ 0 & 0 & -1 \end{bmatrix}$, two electronic circuits, shown in Figures 2 and 3, have been designed and built to realize the system ((3a), (3b), (3c), and (3d)) and ((10a), (10b), and (10c)), respectively. Besides, the recovered message $h_1(t)$ and the error signal are depicted in Figures 4 and 5, respectively, which clearly indicates that the real message $h(t)$ is recovered after 2.5 seconds.

4. Conclusion

In this paper, the generalized Liu system has been firstly introduced and the state observation problem of such a system has been investigated. A simple state estimator for the generalized Liu system has been developed to guarantee the global exponential stability of the resulting error system. Applications of proposed state estimator scheme to chaotic secure communication, implementation of electronic circuits, and numerical simulations have also been provided to illustrate the practicability and effectiveness of the main results. Meanwhile, we have shown that the guaranteed exponential convergence rate of the proposed state estimator and that of the proposed chaotic secure communication

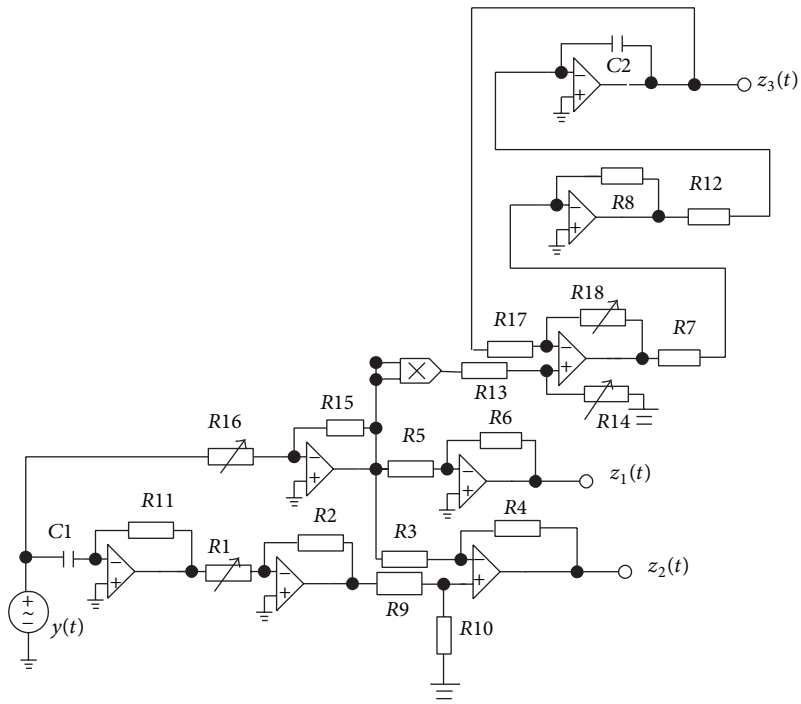

Figure 3: The diagram of implementation of the state estimator ((10a), (10b), and (10c)), where $C1 = C2 = 1\,\mu\text{F}, Ri = 10\,\text{k}\Omega$, for all $i \in \{2, 3, 4, 5, 6, 8, 9, 10, 13, 15, 17\}$, $Ri = 100\,\text{k}\Omega$, for all $i \in \{7, 11, 12\}$, $R1 = R16 = 20\,\text{k}\Omega$, $R14 = R18 = 25\,\text{k}\Omega$, for all $i \in \{14, 18\}$.

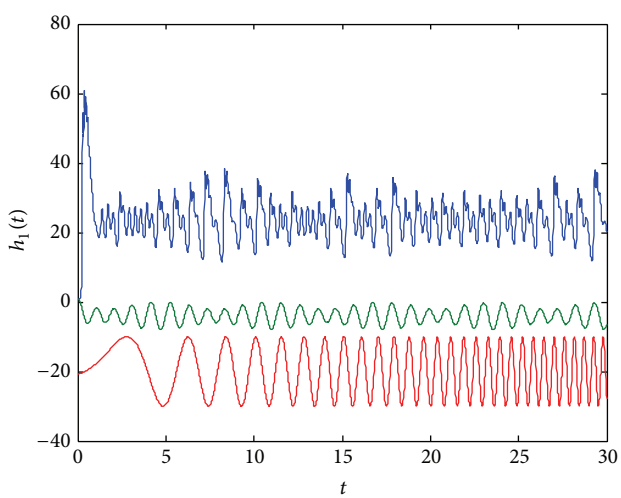

Figure 4: Recovered message of $h_1(t) \in \Re^{3\times 1}$ described in in the receiver of ((12a), (12b), (12c), and (12d)).

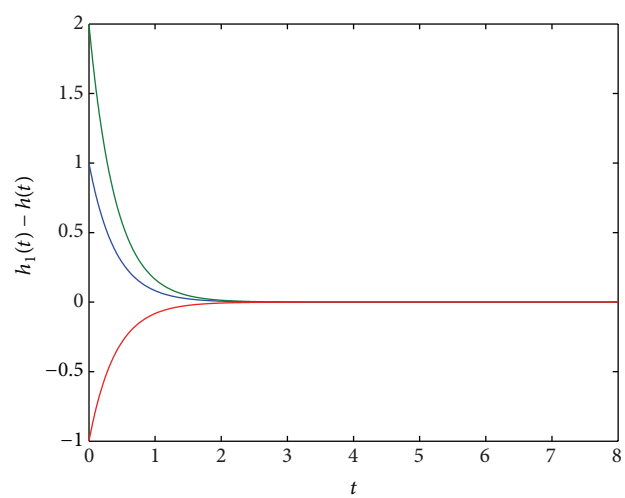

Figure 5: Error signal of $h_1(t) - h(t)$.

can be precisely calculated. However, the state estimator design for more general uncertain Liu system still remains unanswered. This constitutes an interesting future research problem.

Conflict of Interests

The authors declare that there is no conflict of interests regarding the publication of this paper.

Acknowledgments

The author thanks the National Science Council of Republic of China for supporting this work under Grant NSC-102-2221-E-214-043. The author also thanks the I-Shou University for supporting this work under Grant ISU102-04-07. Besides, the author wishes to thank the anonymous reviewers for providing constructive suggestions.

References

[1] Y. Feng, J. Zheng, X. Yu, and N. V. Truong, "Hybrid terminal sliding-mode observer design method for a permanent-magnet synchronous motor control system," *IEEE Transactions on Industrial Electronics*, vol. 56, no. 9, pp. 3424–3431, 2009.

[2] L. Fridman, Y. Shtessel, C. Edwards, and X.-G. Yan, "Higher-order sliding-mode observer for state estimation and input reconstruction in nonlinear systems," *International Journal of Robust and Nonlinear Control*, vol. 18, no. 4-5, pp. 399–412, 2008.

[3] A. Golabi, M. Beheshti, and M. H. Asemani, "H_∞ robust fuzzy dynamic observer-based controller for uncertain Takagi-Sugeno fuzzy systems," *IET Control Theory & Applications*, vol. 6, no. 10, pp. 1434–1444, 2012.

[4] H. Langjord, G.-O. Kaasa, and T. A. Johansen, "Adaptive nonlinear observer for electropneumatic clutch actuator with position sensor," *IEEE Transactions on Control Systems Technology*, vol. 20, no. 4, pp. 1033–1040, 2012.

[5] F. A. Shaik, S. Purwar, and B. Pratap, "Real-time implementation of Chebyshev neural network observer for twin rotor control system," *Expert Systems with Applications*, vol. 38, no. 10, pp. 13043–13049, 2011.

[6] Y.-J. Sun, "A simple observer design of the generalized Lorenz chaotic systems," *Physics Letters A*, vol. 374, no. 7, pp. 933–937, 2010.

[7] Z. Xu and M. F. Rahman, "Comparison of a sliding observer and a Kalman filter for direct-torque-controlled IPM synchronous motor drives," *IEEE Transactions on Industrial Electronics*, vol. 59, no. 11, pp. 4179–4188, 2012.

[8] X.-G. Yan, S. K. Spurgeon, and C. Edwards, "State and parameter estimation for nonlinear delay systems using sliding mode techniques," *IEEE Transactions on Automatic Control*, vol. 58, no. 4, pp. 1023–1029, 2013.

[9] L.-H. Zhao, Z.-Y. Liu, and H. Chen, "Design of a nonlinear observer for vehicle velocity estimation and experiments," *IEEE Transactions on Control Systems Technology*, vol. 19, no. 3, pp. 664–672, 2011.

[10] A. Boulkroune and M. M'Saad, "A fuzzy adaptive variable-structure control scheme for uncertain chaotic MIMO systems with sector nonlinearities and dead-zones," *Expert Systems with Applications*, vol. 38, no. 12, pp. 14744–14750, 2011.

[11] Y.-K. Li, "The stability of hybrid Liu chaotic system with a sort of oscillating parameters under impulsive control," *Physics Procedia*, vol. 24, part A, pp. 490–495, 2012.

[12] Y. Liu and G. Pang, "The basin of attraction of the Liu system," *Communications in Nonlinear Science and Numerical Simulation*, vol. 16, no. 4, pp. 2065–2071, 2011.

[13] X. R. Shi and Z. Wang, "Anti-synchronization of hyperchaotic Lorenz system and Liu system," in *Proceedings of the Symposium on Photonics and Optoelectronics (SOPO '09)*, pp. 1–4, Wuhan, China, August 2009.

[14] Y.-J. Sun, "Solution bounds of generalized Lorenz chaotic systems," *Chaos, Solitons & Fractals*, vol. 40, no. 2, pp. 691–696, 2009.

[15] Y.-J. Sun, "Chaos synchronization of uncertain Genesio-Tesi chaotic systems with deadzone nonlinearity," *Physics Letters A*, vol. 373, no. 36, pp. 3273–3276, 2009.

[16] Y.-J. Sun, "A novel chaos synchronization of uncertain mechanical systems with parameter mismatchings, external excitations, and chaotic vibrations," *Communications in Nonlinear Science and Numerical Simulation*, vol. 17, no. 2, pp. 496–504, 2012.

[17] Y.-J. Sun, "DII-based linear feedback control design for practical synchronization of chaotic systems with uncertain input nonlinearity and application to secure communication," *Abstract and Applied Analysis*, vol. 2012, Article ID 369267, 14 pages, 2012.

[18] R.-J. Wai, Y.-W. Lin, and H.-C. Yang, "Experimental verification of total sliding-mode control for Chua's chaotic circuit," *IET Circuits, Devices & Systems*, vol. 5, no. 6, pp. 451–461, 2011.

[19] Z. Zhang, H. Shen, and J. Li, "Adaptive stabilization of uncertain unified chaotic systems with nonlinear input," *Applied Mathematics and Computation*, vol. 218, no. 8, pp. 4260–4267, 2011.

[20] J. Tao, J. Zhang, and J. Zhao, "Anti-synchronization of Liu system and Rössler system with unknown parameters based on adaptive control," in *Proceedings of the 2nd International Conference on Mechanic Automation and Control Engineering (MACE '11)*, pp. 88–91, Hohhot, China, July 2011.

[21] X.-P. Zong and Z.-Y. Diao, "States feedback control for Liu chaotic system," in *Proceedings of the International Conference on Machine Learning and Cybernetics (ICMLC '10)*, pp. 992–995, Qingdao, China, July 2010.