Hindawi Publishing Corporation
Mathematical Problems in Engineering
Volume 2016, Article ID 4964191, 13 pages
http://dx.doi.org/10.1155/2016/4964191

Research Article

Three-Dimensional Ground Settlement Induced by Metro Tunnel Excavation Considering the Influence of Group Piles

Zou Jin-feng, Zhang Yan-jun, and Dan Han-cheng

School of Civil Engineering, Central South University, No. 22, Shaoshan South Road, Central South University Railway Campus, Changsha, Hunan 410075, China

Correspondence should be addressed to Dan Han-cheng; danhancheng@163.com

Received 17 December 2015; Accepted 16 March 2016

Academic Editor: Mohammed Nouari

Copyright © 2016 Zou Jin-feng et al. This is an open access article distributed under the Creative Commons Attribution License, which permits unrestricted use, distribution, and reproduction in any medium, provided the original work is properly cited.

Considering the influence of group piles, a prediction model for three-dimensional ground surface settlement induced by circular metro tunnels excavation in incompressible rock masses is proposed based on the stochastic medium theory and the shear displacement method. The surface settlement caused by the metro tunnel opening is divided into two parts. One part is soil mass settlement caused by the metro tunnel opening and calculated by the stochastic medium theory. The other part is the settlement induced by the friction force between the group piles and the soil mass around the metro tunnel cross section and calculated by the shear displacement method. The three-dimensional prediction of the ground surface settlement is obtained by the linear superposition of the two parts. The validation of the proposed prediction approach is proved by comparing with the measured data and the numerical model of the double tunnels under the *Puyuan* overpass where metro tunnels undercrossed group piles. The effects of buried depth, radial convergences, center distance of double tunnels, position and size of piles, and group piles are analyzed and discussed. The improved prediction approach can be applied to calculate the three-dimensional ground settlement, especially for the metro tunnels crossing through group piles.

1. Introduction

The ground surface settlement caused by metro tunnel excavation is an important factor to evaluate the impact of the subway tunnel construction on adjacent structures. It is necessary to control the subsidence deformation of soil mass strictly and reduce the damage induced by ground movement in the process of tunnel excavation, especially the metro tunnel crossing group piles. Some studies have been conducted to predict the ground displacement induced by excavation and solved many practical engineering problems [1–6]. For example, Peck [7] developed a chart method (Gaussian distribution curve) to predict the surface settlement caused by tunnel opening based on the measured settlement data from lots of metro tunnel constructions. Eisenstein et al. [8] and New and O'Reilly [9] pointed out the ineffectiveness of Peck's method [7] in solving practical problems due to its deficiencies in theory. Sagaseta [10] proposed a virtual image technique to calculate the soil mass deformation in an isotropic and homogeneous incompressible soil mass due to the near-surface ground loss. Verruijt and Booker [11] presented an approximate analytical solution of the surface settlement for tunneling in an elastic half space. In addition, the equivalent ground loss parameters are redefined and the modified analytical formulas of vertical displacement are proposed to predict the tunneling-induced undrained ground movements in a soft ground by Loganathan and Poulos [12]. However, these approaches make it difficult to predict ground surface settlement accurately because of a number of complex parameters.

The stochastic medium (SM) theory which is used for mining and studying the movement law of rock was proposed by Litwiniszyn [13, 14]. The SM theory was developed to study the ground surface movement due to underground excavation by Baochen and Dezhang [15] and Liu [16]. Tunneling-induced ground surface movements were modeled and

the back analyses of 18 ground settlement profiles were performed using the SM theory by Yang et al. [17]. Based on the SM theory, the simplified procedure to predict the ground surface settlement and the impact of different tunnel depth and angle on settlement were obtained by Yang and Wang [18]. However, the influence of group piles foundation on surface settlement in subway excavation is ignored in those results. Moreover, those reported publications for studying the ground settlement are limited to two-dimensional (2D) calculation.

According to the shear displacement method [19] and the SM theory (Baochen and Dezhang [15] and Liu [16]), three-dimensional (3D) models for predicting ground surface settlement induced by single and double metro tunnels excavations considering the influence of group piles are proposed, respectively. The interaction coefficient of group piles is introduced to calculate the settlement when tunnels cross through group piles. Moreover, the engineering example of metro tunnel which was located at *Changsha* in China is presented.

2. Methodology

2.1. Approach. The influence of group piles near the metro tunnels on the ground surface settlement cannot be neglected during the tunnels excavation. The ground surface settlement is predicted by linear superposition of settlements caused by metro tunnels excavation and the group piles. The approach followed was as follows:

(1) Based on stochastic medium theory, the ground settlement caused by metro tunnel excavation is calculated.

(2) The ground settlement induced by the friction force between the group piles and soil mass is obtained by using the shear displacement method.

(3) A linear superposition of steps (1) and (2) is adopted, and the ground surface settlement which is caused by the metro tunnel excavation considering the effect of group piles is obtained.

2.2. Assumptions. To predict the ground surface settlement induced by tunnel excavation considering the influence of group piles, the following assumptions are adopted:

(1) The soil mass is incompressible, and it is ideally adapted to the stochastic medium theory.

(2) The piles bodies remain motionless when the tunnels are excavated (i.e., piles will not sink with tunnel excavation).

(3) There is no relative displacement between pile and adjacent soil mass.

2.3. Calculation Method of the Stochastic Medium Theory. A three-dimensional Cartesian coordinate system is established in the space with z-axis for the vertical direction. According to the stochastic medium theory, the vertical movement of soil mass is represented by the function $W(z, x, y)$ as follows [20]:

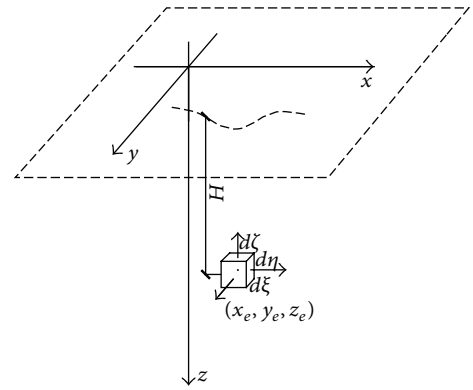

Figure 1: Calculation model for elemental excavation based on the stochastic medium theory.

$$\begin{aligned}\frac{\partial W(z,x,y)}{\partial z} &= B_{11}(z,x,y)\frac{\partial^2 W(z,x,y)}{\partial x^2} \\ &+ B_{12}(z,x,y)\frac{\partial^2 W(z,x,y)}{\partial x \partial y} \\ &+ B_{22}(z,x,y)\frac{\partial^2 W(z,x,y)}{\partial y^2} \\ &+ A_1(z,x,y)\frac{\partial W(z,x,y)}{\partial x} \\ &+ A_2(z,x,y)\frac{\partial W(z,x,y)}{\partial y} \\ &+ N(z,x,y)W(z,x,y),\end{aligned} \tag{1}$$

where B_{11}, B_{12}, B_{22}, A_1, A_2, and N are parameters that depend on the structural characteristics of soil mass medium.

Based on the stochastic medium theory, the process of tunnel excavation is divided into numerous infinitesimal excavation elements, and the total surface displacements are obtained by the superposing displacements induced by elemental excavations. Dual systems are adopted in this study, and one is for the global coordinate (x, y, z) and the other is for the local coordinate (ξ, ζ, η). The calculation model of the ground settlement induced by the elemental excavation with the buried depth of H is shown in Figure 1.

According to the boundary conditions of elemental excavation, the elemental displacement function (W_e) can be solved by the following equations:

$$\begin{aligned}\frac{\partial W_e}{\partial z_e} &= lW_e, \\ W_e\big|_{z_e=0} &= \delta(x_e, y_e),\end{aligned} \tag{2}$$

where l is a differential operator and $l = B_{11}(\partial^2/\partial x_e^2) + B_{12}(\partial^2/\partial x_e \partial y_e) + \cdots$. $\delta(x_e, y_e)$ is a pulse function.

According to the assumption that the soil mass is incompressible (i.e., the volume of soil mass remains constant) during metro tunnels excavation, the horizontal displacements (U_{ex} and U_{ey}) and the vertical displacement (W_e) are satisfied with

$$\frac{\partial W_e}{\partial z} + \frac{\partial U_{ex}}{\partial x} + \frac{\partial U_{ey}}{\partial y} = 0. \tag{3}$$

Combining (1), (2), and (3), soil displacements caused by the metro tunnels excavation can be obtained by

$$\begin{aligned} W_e &= \frac{1}{r_1(z_e)\, r_2(z_e)} \exp\left[-\frac{\pi x_e^2}{r_1^2(z_e)} - \frac{\pi\left(y_e - \rho(z_e)\right)^2}{r_2^2(z_e)}\right], \\ U_{ex} &= \frac{x_e}{r_1(z_e)} \frac{dr_1(z_e)}{dz_e} W_e, \\ U_{ey} &= \left[\frac{y_e - \rho(z_e)}{r_2(z_e)} \frac{dr_2(z_e)}{dz_e} - \frac{d\rho(z_e)}{dz_e}\right] W_e, \end{aligned} \tag{4}$$

where $r_1(z_e)$ and $r_2(z_e)$ are the influence radii of the ground surface settlement caused by elemental excavation that are related to B_{11} and B_{12}. $\rho(z_e)$ is the offset distance of the ground surface settlement.

In this paper, vertical settlement caused by metro tunnel excavation incorporating the influence of group piles is studied. According to (4), the calculation formula of the ground surface settlement at a point (x, y, 0) induced by elemental excavation can be simplified as follows:

$$W_e = \frac{1}{r^2(z)} \exp\left[\frac{-\pi\left(x^2 + y^2\right)}{r^2(z)}\right], \tag{5}$$

where $r(z)$ is the influence radius of the ground surface settlement caused by elemental excavation.

2.4. Ground Surface Settlement

2.4.1. Ground Surface Settlement Induced by Single Tunnel Excavation. A circular metro tunnel with radius R is excavated, where the distance from the center of excavation section to surface is H. The three-dimensional calculation model of surface settlement caused by single tunnel excavation is shown in Figure 2.

The center axial line of the tunnel is parallel to y-axis, and any cross section that is perpendicular to the center line can be regarded as the xz plane. The calculation of the ground surface settlement induced by tunneling can be regarded as a plane problem. Thus, the settlement calculation of elemental excavation ($d\xi d\zeta d\eta$) is simplified as a two-dimensional problem, and the simplified model is shown as Figure 3.

The settlement of the ground surface induced by elemental excavation ($d\xi d\eta$) at the point (X, 0) of x-z coordinates is dependent on

$$dW_p(X) = \frac{1}{r(\eta)} \exp\left[-\frac{\pi}{r^2(\eta)} X^2\right] d\xi d\eta. \tag{6}$$

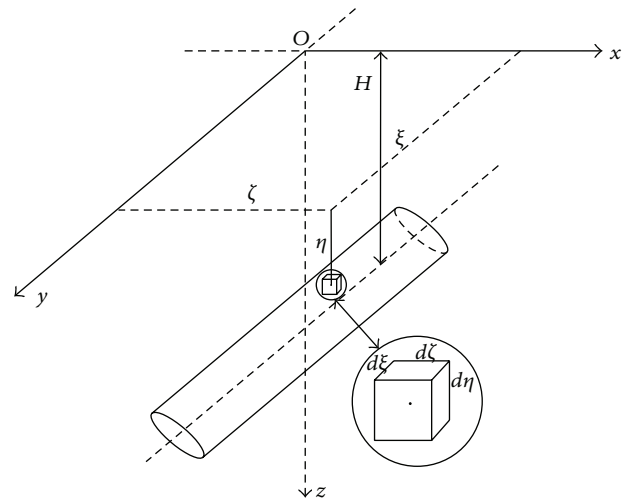

Figure 2: Ground surface settlement caused by single tunnel excavation in 3D.

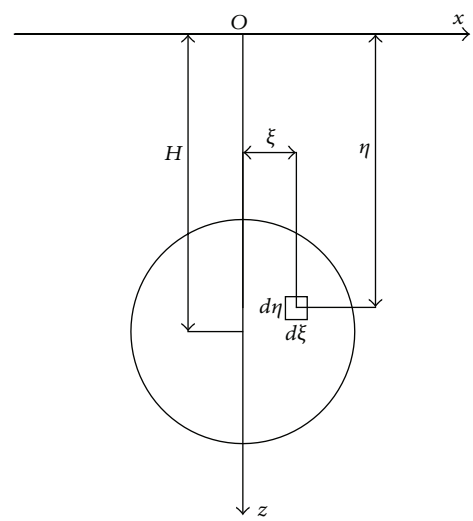

Figure 3: Plane calculation model of elemental excavation.

According to Liu [16], the main influence zone angle (β) of the settlement is introduced to determine the influence radius ($r(\eta)$):

$$r(\eta) = \frac{\eta}{\tan\beta}, \tag{7}$$

where η is the depth of excavation.

The relationship between the main influence zone angle and the internal friction angle (φ) of soil mass can be expressed as

$$\tan\beta = \frac{\sqrt{2\pi}\tan\left(45^\circ - 0.5\varphi\right)}{2.5}. \tag{8}$$

The ground surface movement is dependent on the radial convergence of tunnel's cross section. According to the stochastic medium theory, the surface settlement equals

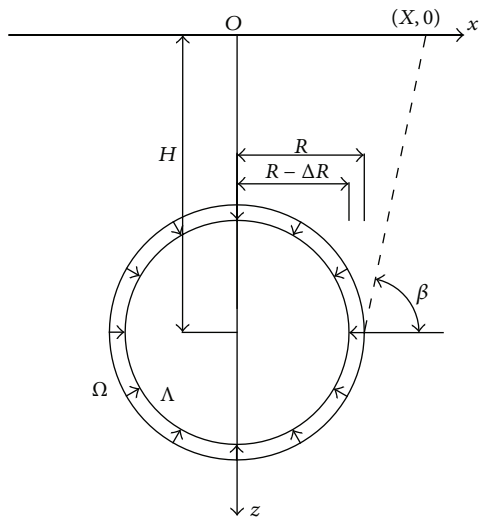

Figure 4: Cross section of circular tunnel.

the settlement difference caused by the original excavation section Ω and section Λ after shrinking as follows:

$$W_p(X) = W_{p\Omega}(X) - W_{p\Lambda}(X) = \iint_{\Omega-\Lambda} \frac{\tan\beta}{\eta} \exp\left[-\frac{\pi\tan^2\beta}{\eta^2}(X-\eta)^2\right] d\xi d\eta. \quad (9)$$

As shown in Figure 4, the initial radius of circular tunnel section Ω is R; after uniformly shrinking, radius becomes $R-\Delta R$. The surface settlement in 2D induced by tunneling can be expressed as follows:

$$W_p(X) = \int_a^b \int_c^d \frac{\tan\beta}{\eta} \exp\left[-\frac{\pi\tan^2\beta}{\eta^2}(X-\eta)^2\right] d\xi\, d\eta - \int_e^f \int_g^h \frac{\tan\beta}{\eta} \exp\left[-\frac{\pi\tan^2\beta}{\eta^2}(X-\eta)^2\right] d\xi\, d\eta, \quad (10)$$

where

$$\begin{aligned} a &= H - R, \\ b &= H + R, \\ c &= -\sqrt{R^2 - (H-\eta)^2}, \\ d &= -c, \\ e &= H - (R - \Delta R), \\ f &= H + (R - \Delta R), \\ g &= -\sqrt{(R-\Delta R)^2 - (H-\eta)^2}, \\ h &= -g. \end{aligned} \quad (11)$$

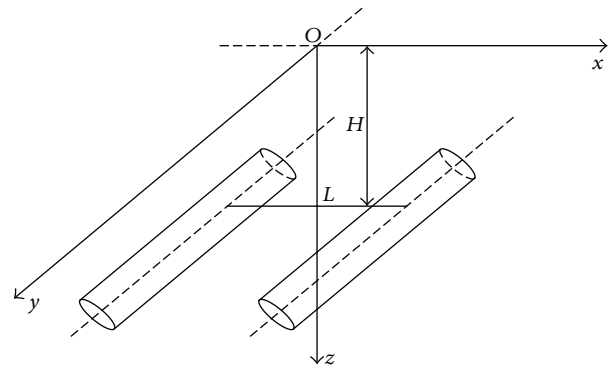

Figure 5: Ground surface settlement caused by double tunnels excavation in 3D.

Similarly, the three-dimensional surface settlement of the point $(X, Y, 0)$ induced by the uniform radial convergence from R to $R-\Delta R$ is obtained as follows:

$$W_s(X,Y) = \int_a^b \int_c^d \frac{\tan\beta}{\eta} \exp\left[-\frac{\pi\tan^2\beta}{\eta^2}(X-\xi)^2\right] d\xi\, d\eta - \int_e^f \int_g^h \frac{\tan\beta}{\eta} \exp\left[-\frac{\pi\tan^2\beta}{\eta^2}(X-\xi)^2\right] d\xi\, d\eta. \quad (12)$$

2.4.2. Ground Surface Settlement Induced by Double Tunnel Excavation. As shown in Figure 5, the double circular tunnels with initial radius R are excavated at depth H. The center distance between the two tunnels is L ($L > 2R$). The radial convergences of the double circular tunnels are ΔR_1 and ΔR_2, respectively.

According to the stochastic medium theory, the surface settlement caused by the double tunnels excavation can be considered as a linear superposition of settlement induced by two single tunnel excavations. Therefore, the ground settlement calculation in 3D can be simplified as a plane problem and shown in Figure 6.

The surface settlements caused by two single tunnel excavations in 2D are expressed as follows, respectively:

$$\begin{aligned} W_{p11}(X) &= \int_{a_1}^{b_1} \int_{c_1}^{d_1} \frac{\tan\beta}{\eta} \exp\left[-\frac{\pi\tan^2\beta}{\eta^2}(X-\xi)^2\right] d\xi\, d\eta - \int_{e_1}^{f_1} \int_{g_1}^{h_1} \frac{\tan\beta}{\eta} \exp\left[-\frac{\pi\tan^2\beta}{\eta^2}(X-\xi)^2\right] d\xi\, d\eta, \\ W_{p12}(X) &= \int_{a_2}^{b_2} \int_{c_2}^{d_2} \frac{\tan\beta}{\eta} \exp\left[-\frac{\pi\tan^2\beta}{\eta^2}(X-\xi)^2\right] d\xi\, d\eta - \int_{e_2}^{f_2} \int_{g_2}^{h_2} \frac{\tan\beta}{\eta} \exp\left[-\frac{\pi\tan^2\beta}{\eta^2}(X-\xi)^2\right] d\xi\, d\eta, \end{aligned} \quad (13)$$

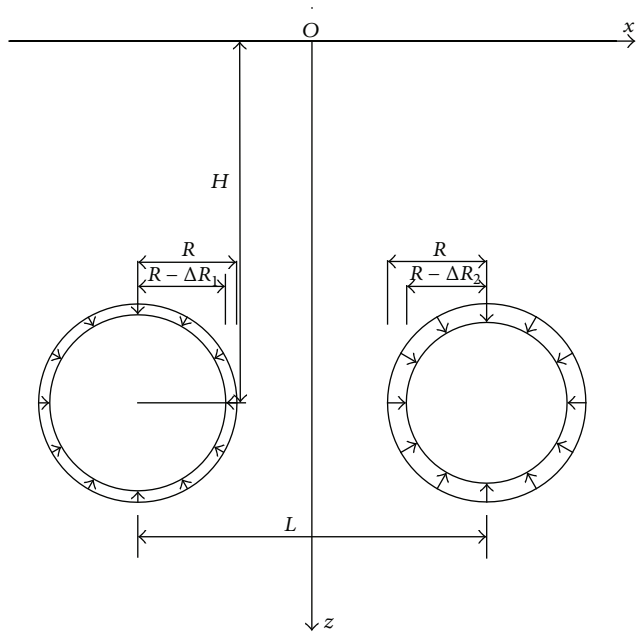

Figure 6: Plane calculation model of surface settlement induced by double tunnels excavation.

where a_1, a_2, b_1, b_2, c_1, c_2, d_1, d_2, e_1, e_2, f_1, f_2, g_1, g_2, h_1, and h_2 are the integration parameters of the double tunnels. These variables are expressed as follows, respectively:

$$\begin{aligned}
a_1 &= H - R,\\
b_1 &= H + R,\\
c_1 &= -\sqrt{R^2 - (H-\eta)^2} - \frac{L}{2},\\
d_1 &= \sqrt{R^2 - (H-\eta)^2} - \frac{L}{2},\\
e_1 &= H - (R - \Delta R_1),\\
f_1 &= H + (R - \Delta R_1),\\
g_1 &= -\sqrt{(R-\Delta R_1)^2 - (H-\eta)^2} - \frac{L}{2},\\
h_1 &= \sqrt{(R-\Delta R_1)^2 - (H-\eta)^2} - \frac{L}{2},\\
a_2 &= a_1,\\
b_2 &= b_1,\\
c_2 &= -\sqrt{R^2 - (H-\eta)^2} + \frac{L}{2},\\
d_2 &= \sqrt{R^2 - (H-\eta)^2} + \frac{L}{2},\\
e_2 &= H - (R - \Delta R_2),\\
f_2 &= H + (R - \Delta R_2),\\
g_2 &= -\sqrt{(R-\Delta R_2)^2 - (H-\eta)^2} + \frac{L}{2},\\
h_2 &= \sqrt{(R-\Delta R_2)^2 - (H-\eta)^2} + \frac{L}{2}.
\end{aligned} \tag{14}$$

According to superposition principle, the total settlement of the ground surface caused by the double tunnels excavation at the point $(X, 0)$ of x-z coordinates in 2D can be expressed by

$$W_{p1}(X) = W_{p11}(X) + W_{p12}(X). \tag{15}$$

Therefore, the three-dimensional surface settlements induced by the uniform radial convergences (ΔR_1 and ΔR_2, resp.) are presented as follows:

$$\begin{aligned}
&W_{s11}(X,Y)\\
&\quad = \int_{a_1}^{b_1}\int_{c_1}^{d_1} \frac{\tan\beta}{\eta} \exp\left[-\frac{\pi\tan^2\beta}{\eta^2}(X-\xi)^2\right] d\xi\, d\eta\\
&\qquad - \int_{e_1}^{f_1}\int_{g_1}^{h_1} \frac{\tan\beta}{\eta} \exp\left[-\frac{\pi\tan^2\beta}{\eta^2}(X-\xi)^2\right] d\xi\, d\eta,\\
&W_{s12}(X,Y)\\
&\quad = \int_{a_2}^{b_2}\int_{c_2}^{d_2} \frac{\tan\beta}{\eta} \exp\left[-\frac{\pi\tan^2\beta}{\eta^2}(X-\xi)^2\right] d\xi\, d\eta\\
&\qquad - \int_{e_2}^{f_2}\int_{g_2}^{h_2} \frac{\tan\beta}{\eta} \exp\left[-\frac{\pi\tan^2\beta}{\eta^2}(X-\xi)^2\right] d\xi\, d\eta.
\end{aligned} \tag{16}$$

The three-dimensional total settlement of ground surface at the point $(X, Y, 0)$ induced by double circular tunnels excavations is obtained by

$$W_{s1}(X,Y) = W_{s11}(X,Y) + W_{s12}(X,Y). \tag{17}$$

2.5. Ground Surface Settlement Effected by the Pile. The interaction between the pile and the soil mass is incorporated, and the displacement by the friction resistance of pile must be considered [21]. In the paper, the shear displacement method is used to calculate the ground displacement by the friction resistance of pile. The pile with radius r_0 and the influence radius r_m of the friction resistance are shown in Figure 7.

In Figure 7, s is the vertical displacement of the soil mass element while r is the distance between the soil mass element and the pile center. Horizontal surface displacement of soil mass element is neglected. Thus, the shear strain of the soil mass element is defined as

$$\gamma = \frac{ds}{dr}. \tag{18}$$

Therefore, shear stress is expressed as

$$\tau = G\frac{ds}{dr}, \tag{19}$$

where G is shear modulus.

An annular soil mass element around the pile with the height being k, the inner diameter being r, and the outer diameter being $r + dr$, is defined. Then, the equilibrium equation of the submerged soil mass element and the pile is expressed as

$$2\pi r\tau k = 2\pi r_0\tau_0 k, \tag{20}$$

where r_0 is radius of the pile. τ_0 is the friction resistance.

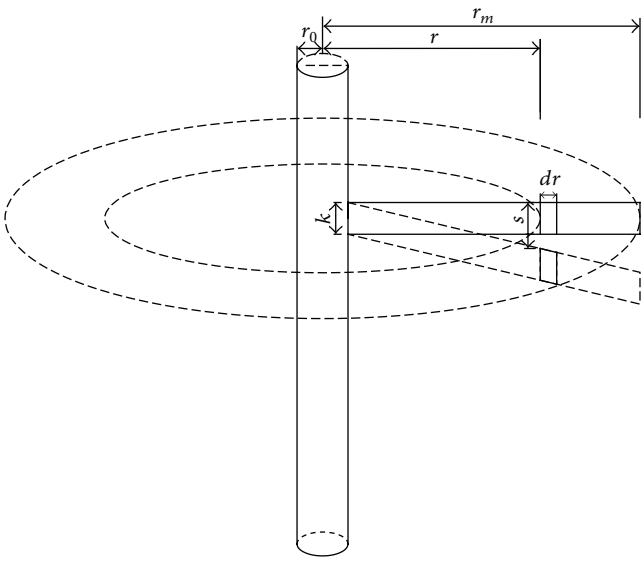

Figure 7: Calculation model of ground surface displacement effected by pile in 3D.

By substituting (20) into (19), the differential equation is derived:

$$G\frac{ds}{dr} = \frac{r_0\tau_0}{r}. \tag{21}$$

The displacement of soil mass around the pile is presented by integrating (21) as follows:

$$s = \begin{cases} \dfrac{r_0\tau_0}{G}\ln\dfrac{r_m}{r} & (r_0 \le r \le r_m) \\ 0 & (r > r_m). \end{cases} \tag{22}$$

2.6. Effect of Group Piles. According to the load transfer mechanism, the lateral load resistance of pile foundations is critically important due to pile-soil-pile interaction when lateral soils move down (Rollins et al. [22, 23]). The interaction effect between the group piles and soil masses should be taken into account in the calculation of surface displacement. As an example of group piles as shown in Figure 8, the interactions between pile C and other piles are present.

According to the group piles tests and the back analysis, formulations have been developed to compute the interaction coefficients of group piles (f_m) by Rollins et al. [22, 23] and the expressions for each case are shown as follows:

First (lead) row piles:

$$f_m = 0.26\ln\left(\frac{S}{d_0}\right) + 0.5 \le 1.0. \tag{23a}$$

Second row piles:

$$f_m = 0.51\ln\left(\frac{S}{d_0}\right) \le 1.0. \tag{23b}$$

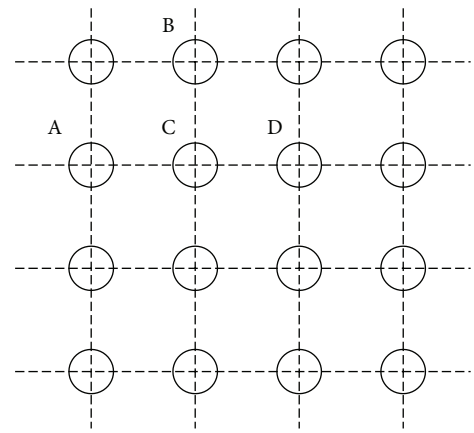

Figure 8: 4 × 4 group piles.

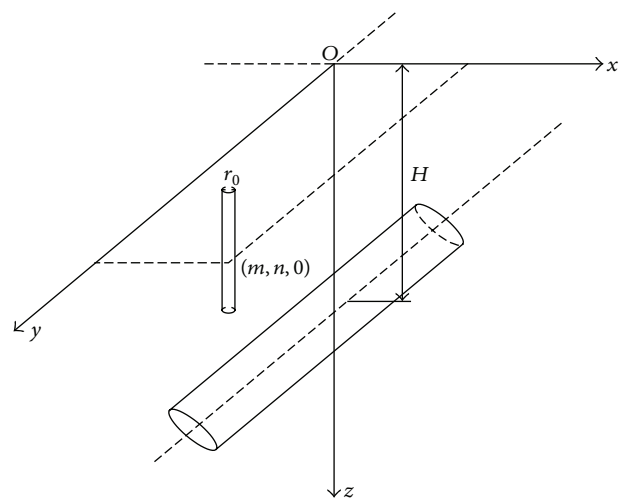

Figure 9: Tunnel excavation with the effect of piles in 3D.

Third or higher row piles:

$$f_m = 0.6\ln\left(\frac{S}{d_0}\right) - 0.25 \le 1.0, \tag{23c}$$

where S is center-to-center spacing between piles in the direction of loading and d_0 is width or outside diameter of the pile. The values of f_m are limited to 1.0. The interaction between the pile group is neglected when the spacing between piles is larger than $6.5d_0$.

3. Total Settlement of the Ground Surface

3.1. Single Tunnel. In Figure 9, a circular metro tunnel with initial radius R is excavated underground in incompressible soil mass. The central axis of tunnel is parallel to z-axis in the Cartesian coordinate system (x, y, z). A pile with radius r_0 is located at the area, and the center of pile is (m, n, 0). The approach expressed above is adopted to determine the total surface settlement caused by single metro tunnel excavation with the consideration of the pile effect.

The pile has a negative effect on the settlement because of the frictions force between pile and soil mass. The maximum friction force is obtained by the largest relative displacement only induced by the metro tunnel excavation between pile and soil mass. However, the friction force is impossible to reach its limits and 0.8 times of the maximum friction force is adopted [20]. According to (22), the displacement induced by the impact of pile is obtained as follows:

$$W_{s2}(X,Y) = \begin{cases} -\dfrac{4r_0\tau_0}{5G}\ln\dfrac{r_m}{r} & r_0 \le r \le r_m \\ 0 & r > r_m, \end{cases} \tag{24}$$

$$r = \sqrt{(X-m)^2 + (Y-n)^2},$$

where m and n are the coordinates of the center of the pile for x and y, respectively.

The total three-dimensional settlement of the ground surface caused by single metro tunnel excavation considering the influence of pile is obtained by

$$W_s(X,Y) = W_{s1}(X,Y) + W_{s2}(X,Y). \tag{25}$$

However, the metro tunnel often crosses the area with group piles. Incorporating the effect of group piles, total settlement of the ground surface is predicted by superposing the settlement caused by tunnel excavation and the displacement effected by the group piles:

$$W_s(X,Y) = W_{s1}(X,Y) + \sum_{1}^{t} f_m W_{s2i}(X,Y), \tag{26}$$

where i and t represent the order number of piles and the total number of group piles, respectively.

3.2. Double Tunnels. As shown in Figure 9, the double circular metro tunnels have been excavated with initial radius R, the same depth H, and center distance L ($L > 2R$). A pile with radius r_0 remaining motionless is located near the tunnels, with the coordinate of pile center (m, n, 0). According to the superposition principle, the ground surface settlement for the double tunnels excavation considering the influence of single pile is computed by

$$W_s(X,Y) = W_{s11}(X,Y) + W_{s12}(X,Y) + W_{s2}(X,Y). \tag{27}$$

The three-dimensional prediction of ground surface settlement considering the influence of group piles is presented as follows (Figure 10):

$$W_s(X,Y) = W_{s11}(X,Y) + W_{s12}(X,Y) + \sum_{1}^{t} f_m W_{s2i}(X,Y). \tag{28}$$

4. Validations

4.1. Comparison with Measured Data. In order to validate the effectiveness and accuracy of the proposed approach, the predicted settlements induced by tunneling with the influence of group piles were compared with the measured data obtained from the segment from *Xujiachong* station to *Railway College* station of the metro tunnels which were located at *Changsha* in China. The metro tunnels cross through the group piles of *Puyuan* overpass whose foundations are frictional piles with radii (r_0) of 1 m. The double circular tunnels with the radius (R) of 3 m and buried depth (H) of 21 m are excavated by shield driving method. The average center distance (L) and the measured radial convergences (ΔR) of tunnels are 21.3 m and 0.01015 m, respectively. The aerial map of *Puyuan* overpass and distribution of piles are shown in Figures 11 and 12, respectively.

In Figure 12, the direction which is approximately parallel to tunnel centerlines is taken as y-axis and the vertical direction of y-axis is x-axis. Due to $S_{2,11} = 17.91$ m $> 6.5d_0 =$ 13 m, the piles 1–10 and piles 11–20 are regarded as the first and second group piles, respectively. It shows that both $S_{1,2}$ and $S_{11,12}$ are 5 m from the field data. According to the calculation by ((23a), (23b), and (23c)), the interaction coefficients (f_m) are both 0.467. Geotechnical parameters were obtained by tests, and the local test parameters are shown in Table 1.

Table 1: Geotechnical parameters.

Friction (KPa)	Elastic modulus (KPa)	Shear modulus (KPa)	Poisson ratio	Friction angle (degrees)
τ_0	25000	17123.3	0.23	25

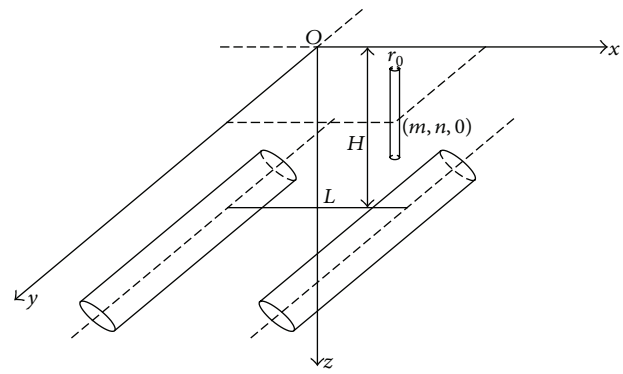

Figure 10: Double tunnels excavation with the effect of piles in 3D.

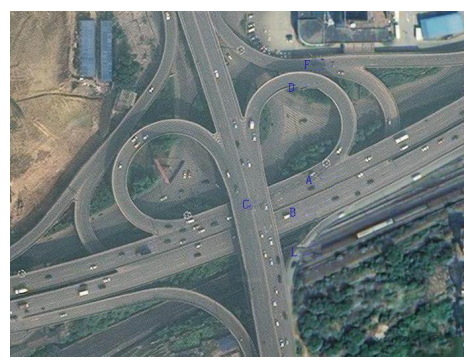

Figure 11: The aerial map of *Puyuan* overpass.

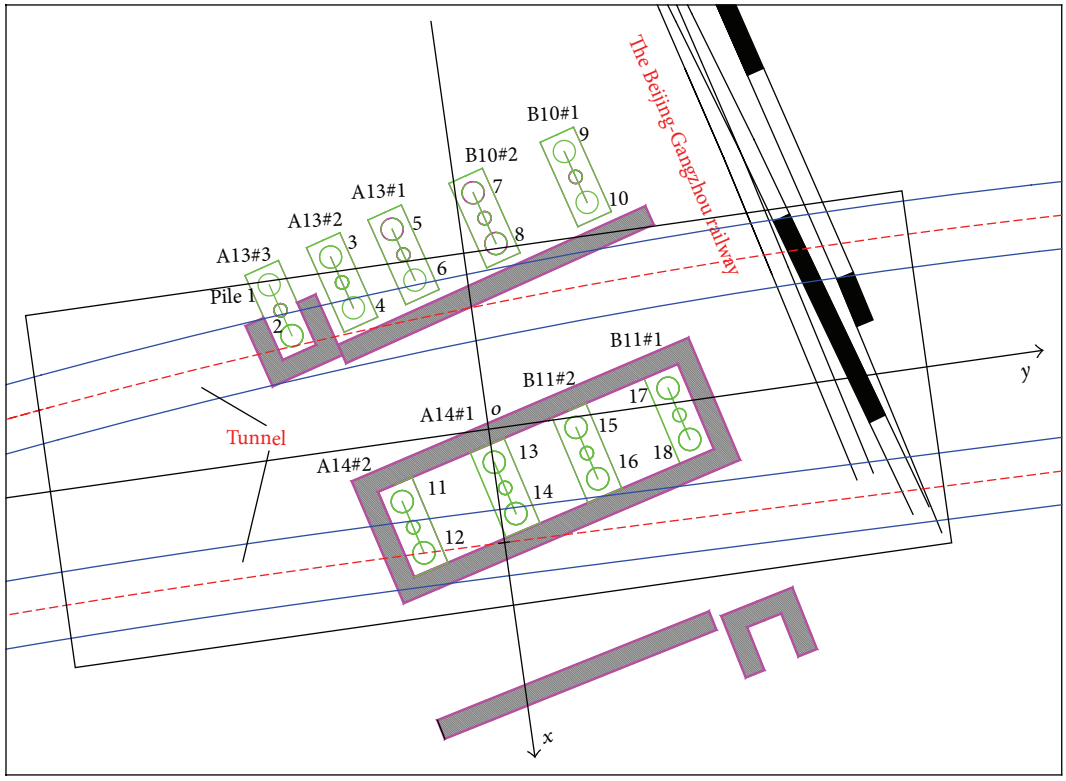

Figure 12: Piles distribution of *Puyuan* overpass.

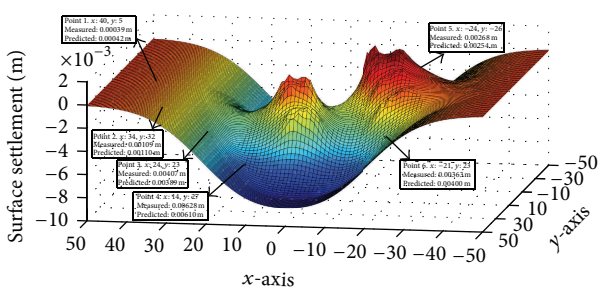

Figure 13: Three-dimensional surface settlement induced by double tunnels excavation considering the influence of group piles and measured data.

595 points are set to measure the actual displacements of ground surface which are induced by the metro tunnels excavation in the segment from *Xujiachong* station to *Railway College* station. A part of monitoring data and the predicted results by the proposed approach in the area of 100 m × 100 m is shown in Figure 13.

The comparison between the measured data of six points and the predicted results by the proposed approach are carried out, and the predicted settlements of the ground surfaces for points 1, 2, 4, and 6 are larger than those of the field data as shown in Figure 13. The results by the proposed approach are smaller than the measured data of points 3 and 5 which are located at the influence zone of group piles. The comparison shows that the three-dimensional surface settlements induced by double tunnel excavations considering the influence of group piles are close to the monitoring data, with an average error of approximately 4.28%:

$$\frac{0.071 + 0.009 + 0.0295 + 0.0925 + 0.055}{6} \times 100\% = 4.28\%. \quad (29)$$

The calculation results depict that the surface settlement reaches its maximum value on the centerline of tunnels. The surface settlement decreases gradually with the increasing of horizontal distance and at infinity $W \to 0$. The settlements near piles are smaller than those far from them.

4.2. Numerical Validation. For further validation of the prediction approach in this paper, an analysis for the ground surface settlement was presented by numerical software. The basic geotechnical parameters and engineering parameters are the same as the engineering example above. The results of numerical simulation are shown in Figure 14, with a negative value indicating settling down.

It is evident from the results in Figure 14 that the ground surface settlements around piles are smaller than those far away from the piles in the same x coordinates. Comparing the results in Figures 13 and 14, the numerical results are well agreeable with those of the proposed approach.

Table 2: Radial convergences.

Examples	1	2	3	4
ΔR_1 (m)	0.0105	0.0156	0.031	0.031
ΔR_2 (m)	0.0105	0.0156	0.031	0.0489

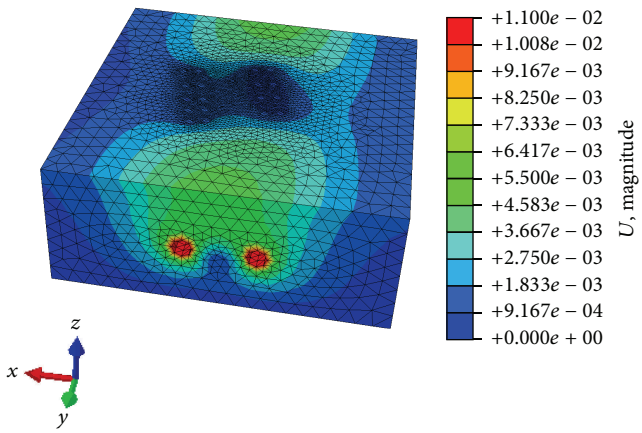

Figure 14: Numerical simulation of ground displacement in 3D.

5. Analysis and Discussion

5.1. Effect of the Buried Depth. In order to illustrate the influence of parameters for the proposed approach on the surface displacement, the analyses and discussions for buried depth of the tunnel, center distance of double tunnels, size and position of piles, and convergence are performed. To determine the effect of the buried depth of tunnel on the surface settlement, the radial convergences presented by Yang and Wang [18] and local test geotechnical parameters in Table 1 are adopted. The engineering parameters are substituted as follows: $r_0 = 1$ m, $r_m = 20$ m, $m = n = 0$, $R = 3$ m, $\Delta R_1 = \Delta R_2 = 0.0156$ m, $L = 40$ m, and $H = 10$, 20, 30, and 50 m, respectively. By MATLAB programming and computing in the area of 100 m × 100 m, the surface settlements induced by double tunnel excavations with the influence of pile are presented for four examples in Figure 15.

As shown in Figure 15, the surface displacements which are induced by tunneling reach the maximum values on the center lines of tunnel. The greater the depth of the tunnel is, the smaller the surface settlement is. In comparison of the four examples, the frictional resistance between the pile and soil mass shows a countereffect on soil mass movement in the influence zone of piles. The countereffect is particularly evident when the tunnels buried depth is 50 m. The scope of ground movement will broaden, and the interaction effect of double tunnels on settlement and the pile effect are more significant with the buried depth increasing.

5.2. Effect of the Radial Convergences. In order to study the effect of the radial convergences of tunnels on the surface settlement, the convergences presented by Yang and Wang [18] are adopted in Table 2. The engineering parameters are substituted as follows: $r_0 = 1$ m, $r_m = 20$ m, $m = n = 0$, $R = 3$ m, $H = 20$ m, and $L = 40$ m; the radial convergences are shown in Table 2. The surface settlements considering different convergences are predicted by the proposed approach as shown in Figure 16.

The effects of radial convergences on the surface settlement are significant. For example, with the ΔR_1 and ΔR_2 increasing from 0.0105 to 0.0310 m, the surface settlement is almost three times as examples 1 and 3 shown in Figure 16. Moreover, the significant differences of settlement caused by different tunnel convergences after working can be seen from example 4. The ground surface settlements induced by radical convergence of 0.0310 m are smaller than those by radical convergence of 0.0489 m.

Table 3: The coordinates of the piles center on the ground and radii of piles.

Examples	1	2	3	4
Coordinates	(0, 0)	(20, 0)	(30, 0)	(30, 0)
r_0 (m)	1	1	1	2
r_m (m)	20	20	20	40

Table 4: The parameters of pile group.

Examples	r_0 (m)	r_m (m)	Coordinates	$\overline{d_0}$ (m)	S (m)	f_m
1	1	20	(−20, 0)	2	40	1
	1	20	(20, 0)			
2	1	20	(10, 0)	2	10	0.918
	1	20	(20, 0)			
3	2	20	(10, 0)	3	10	0.738
	1	20	(20, 0)			
4	2	20	(10, −10)	4	14.14	0.828
	2	40	(20, −20)			

5.3. Effect of the Center Distance. To investigate the effect of center distance on ground settlement, four different examples are analyzed using the proposed approach with the data as follows: $r_0 = 1$ m, $r_m = 20$ m, $m = n = 0$, $R = 3$ m, $\Delta R_1 = \Delta R_2 = 0.0156$ m, $H = 20$ m, and $L = 10$, 20, 40, and 60 m, respectively. The results of settlement for different center distances are shown in Figure 17.

In Figure 17, the surface settlements induced by tunneling with $L = 10$ m are larger than those in examples 2, 3, and 4 (i.e., $L = 20$, 40, and 60 m, resp.) under the condition of same pile's coordinates. The smaller the center distance is, the more obvious the interaction effect of double tunnels on surface settlement is. The effect of piles on settlement will enhance with decreasing of center distance.

5.4. Effect of the Position and Size of Piles. Substituting the parameters $R = 3$ m, $\Delta R_1 = \Delta R_2 = 0.0156$ m, $L = 40$ m, and $H = 20$ m, the coordinates and radii of piles are shown in Table 3. The results are shown in Figure 18.

As it is shown from the results depicted in Figure 18, the effect of pile on settlement is greatest when pile is located at the neutral axis of tunnel. The effect will decrease with the increase of distance between pile and the neutral axis of tunnel. In the light of examples 3 and 4 in Figure 18, the scope

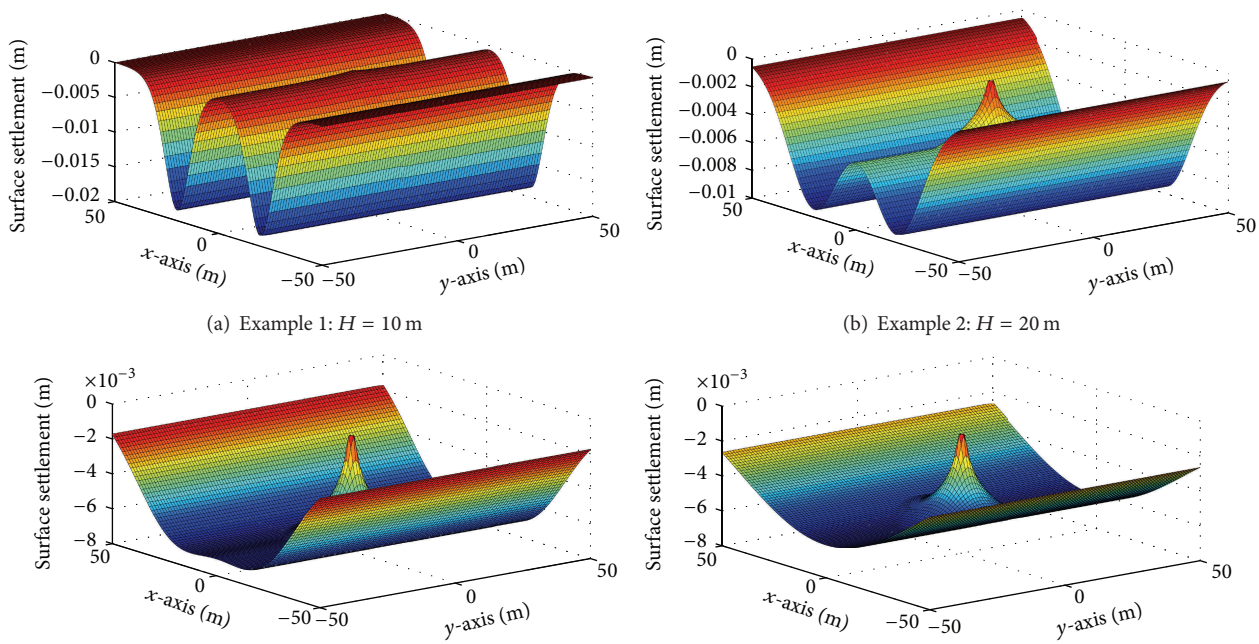

(a) Example 1: $H = 10$ m

(b) Example 2: $H = 20$ m

(c) Example 3: $H = 30$ m

(d) Example 4: $H = 50$ m

Figure 15: Surface settlement induced by the metro tunnels excavation considering the pile effects with different buried depths.

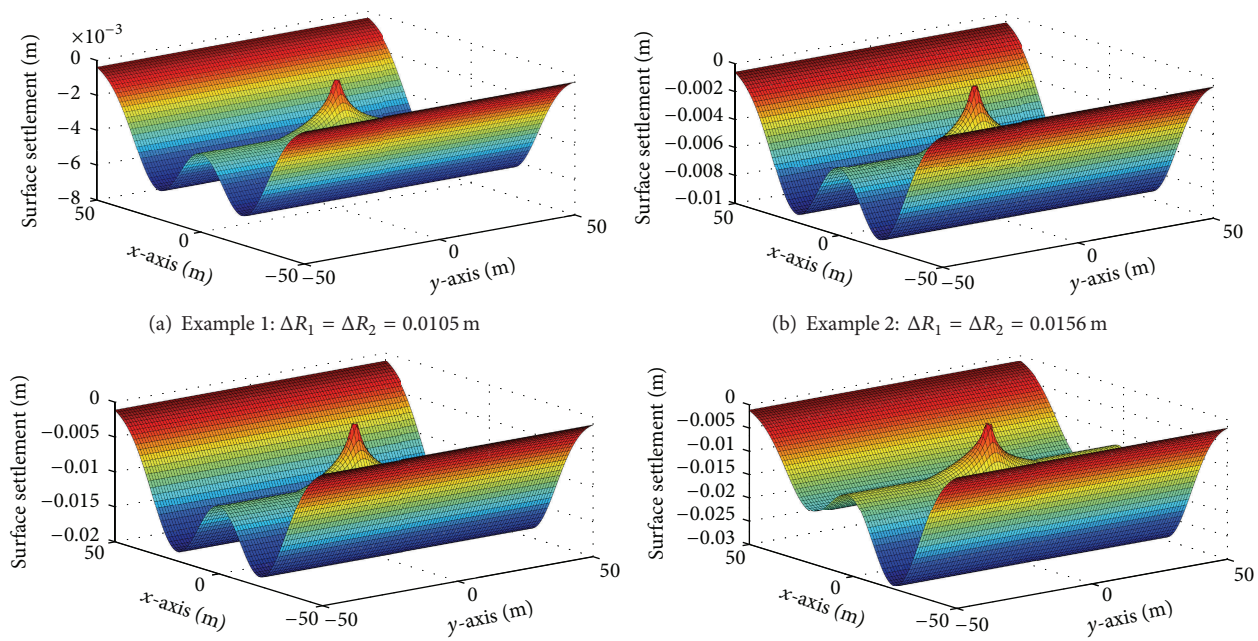

(a) Example 1: $\Delta R_1 = \Delta R_2 = 0.0105$ m

(b) Example 2: $\Delta R_1 = \Delta R_2 = 0.0156$ m

(c) Example 3: $\Delta R_1 = \Delta R_2 = 0.0310$ m

(d) Example 4: $\Delta R_1 = 0.031$ m, $\Delta R_2 = 0.0489$ m

Figure 16: Surface settlement induced by tunnels excavation considering the pile effects with different convergences in 3D.

of effected area on surface settlement will increase with r_0 increasing.

5.5. Effect of Group Piles. To study the influence of group piles, the predictions of settlement induced by double opening considering the effect of two piles are conducted in this section. Taking the parameters $R = 3$ m, $\Delta R_1 = \Delta R_2 = 0.0156$ m, $L = 40$ m, and $H = 20$ m, the parameters of piles and interaction coefficients are shown in Table 4. The results of four examples are presented in Figure 19.

Figure 19(a) illustrates that the interaction of piles can be neglected when S is larger than the influence radius of piles.

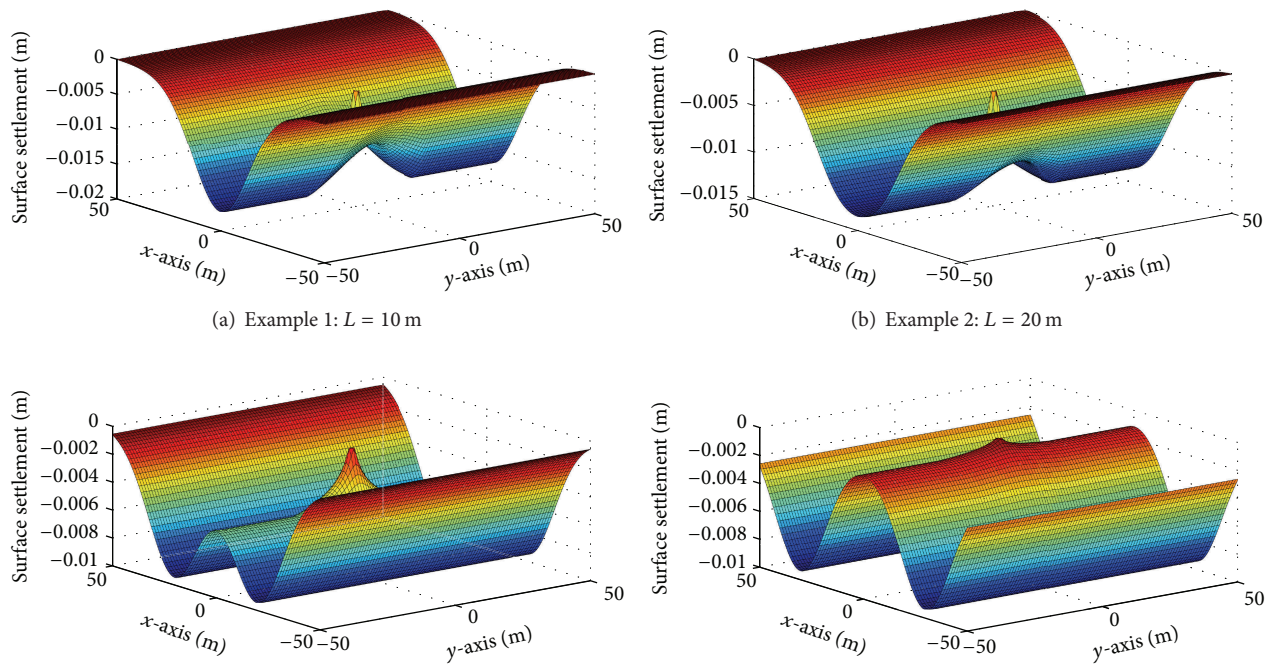

(a) Example 1: $L = 10$ m

(b) Example 2: $L = 20$ m

(c) Example 3: $L = 40$ m

(d) Example 4: $L = 60$ m

Figure 17: Surface settlement induced by tunnels excavation considering the pile effects with different center distances in 3D.

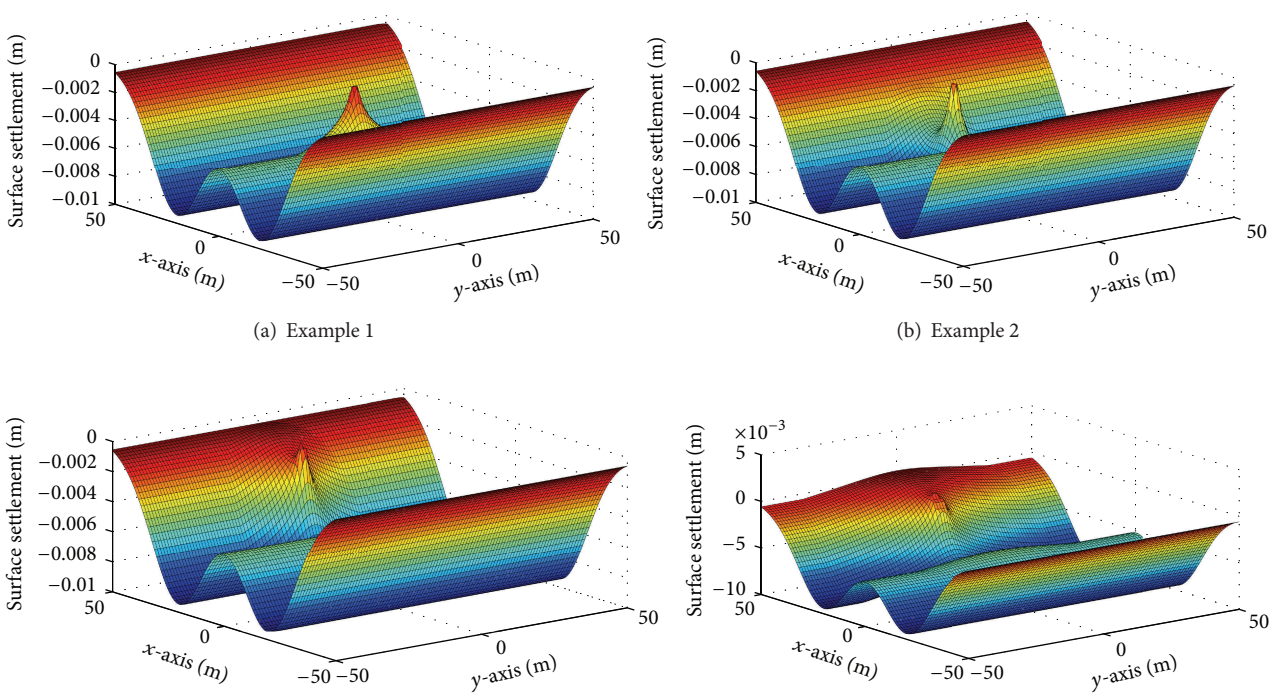

(a) Example 1

(b) Example 2

(c) Example 3

(d) Example 4

Figure 18: Surface settlement induced by tunnels excavation considering the pile effects with different locations and sizes of piles in 3D.

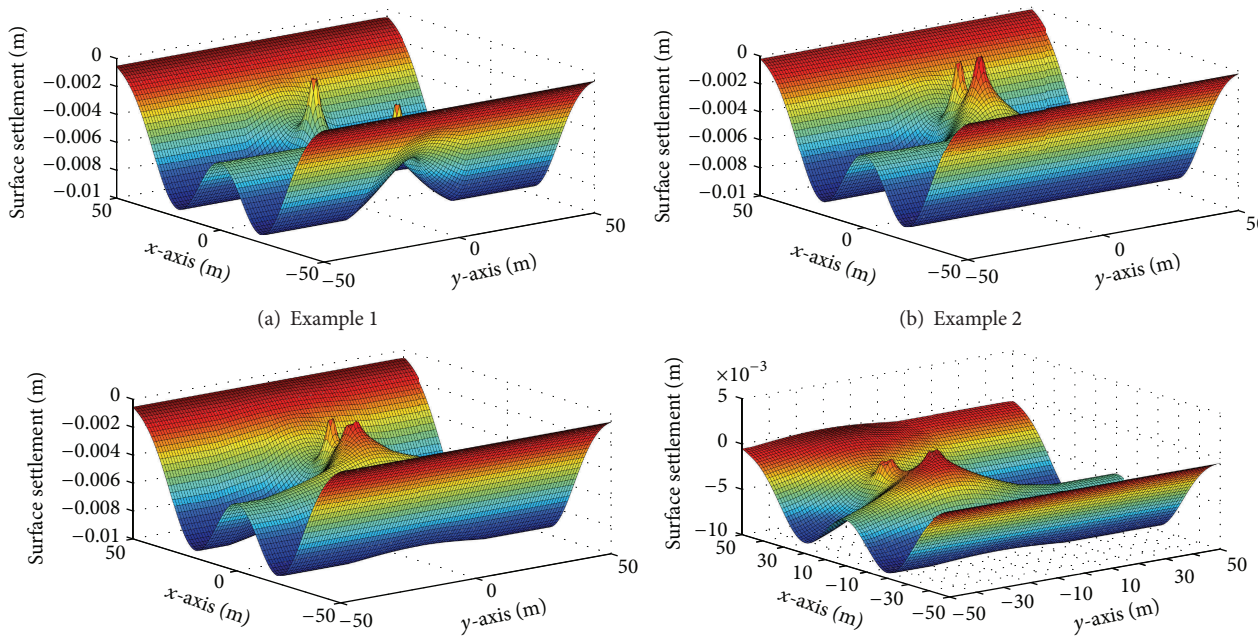

(a) Example 1 (b) Example 2

(c) Example 3 (d) Example 4

Figure 19: Surface settlement induced by tunnels excavation considering group piles effect in 3D.

From examples 2, 3, and 4, it can be found that the larger pile radius results in the wider affected area and the greater interaction between piles on the affected scope.

6. Conclusions

(1) Based on stochastic medium theory and the shear displacement method, the 3D model for predicting the ground surface settlement induced by circular tunneling through piles is proposed, and the prediction approaches are obtained in this study. The prediction of surface displacement which is induced by double metro tunnels opening with the influence of group piles is presented for the engineering example in the city of *Changsha*, China. The effectiveness and validation of the proposed prediction approaches are proved by the engineering example and numerical model.

(2) The presented models and prediction approaches can be applied to calculate the ground surface settlement due to tunneling. The effect of piles is also considered in this study, especially for group piles. However, the effects of water and adjacent buildings on settlement are not considered in this study. The prediction of surface settlement considering these complex factors will be studied in the future.

Notations

d_0: Width or outside diameter of the pile [L]
E: Elastic modulus of the rock mass [FL^{-2}]
f_m: Interaction coefficients of group piles [-]
G: Shear modulus [FL^{-2}]
H: Depth from the center of circular tunnel to surface [L]
L: Center distance of tunnels [L]
m, n: Coordinates of pile's center [-]
r_0: Radius of pile [L]
r_m: Influence radius of pile [L]
R: Tunnel radius [L]
S: Center-to-center spacing between piles in the direction of loading [L]
U_{ex}, U_{ey}: Horizontal displacements [L]
W: Surface settlement [L]
x, y, z: Global coordinate [L]
ΔR: Radical convergences [L]
β: Angle of influence zone [-]
ξ, ζ, η: The local coordinate [L]
τ_0: Friction resistance [-]
τ: Shear stress [-]
γ: Shear strain [-]
φ: Internal friction angle [-]
ν: Poisson ratio [-].

Competing Interests

The authors declare that they have no competing interests.

Acknowledgments

The authors are grateful to Project 973 Program (2013CB036004), the National Natural Science Foundation of China (no. 51208523), the Fundamental Research Funds for the Central Universities of Central South University

(2016zzts395), and the China Postdoctoral Science Foundation (no. 2003034468) for the financial support.

References

[1] X.-L. Yang, "Seismic displacement of rock slopes with nonlinear Hoek-Brown failure criterion," *International Journal of Rock Mechanics and Mining Sciences*, vol. 44, no. 6, pp. 948–953, 2007.

[2] X. L. Yang, "Upper bound limit analysis of active earth pressure with different fracture surface and nonlinear yield criterion," *Theoretical and Applied Fracture Mechanics*, vol. 47, no. 1, pp. 46–56, 2007.

[3] J. F. Zou and S. S. Li, "Theoretical solution for displacement and stress in strain-softening surrounding rock under hydraulicmechanical coupling," *Science China Technological Sciences*, vol. 58, no. 8, pp. 1401–1413, 2015.

[4] Z. Jin-Feng and S. Yu, "Theoretical solutions of a circular tunnel with the influence of the out-of-plane stress based on the generalized Hoek–Brown failure criterion," *International Journal of Geomechanics*, 2015.

[5] J. F. Zou and Z. He, "Numerical approach for strain-softening rock with axial stress," *Proceedings of the Institution of Civil Engineers—Geotechnical Engineering*, In press.

[6] J. F. Zou, S. S. Li, Y. Xu, H. C. Dan, and L. H. Zhao, "Theoretical solutions for a circular opening in an elastic–brittle–plastic rock mass incorporating the out-of-plane stress and seepage force," *KSCE Journal of Civil Engineering*, vol. 20, no. 2, pp. 687–701, 2016.

[7] R. B. Peck, "Deep excavations and tunnelling in soft ground," in *Proceedings of the 7th International Conference on SMFE (SMFE '69)*, pp. 225–290, 1969.

[8] Z. Eisenstein, F. El-Nahhas, and S. Thompson, "Strain field around a tunnel in stiff soil," in *Proceedings of the 10th International Conference on Soil Mechanics and Foundation Engineering*, vol. 1, Stockholm, Sweden, June 1981.

[9] B. M. New and M. P. O'Reilly, "Tunneling-induced ground movements, predicting their magnitude and effects," in *Proceedings of the 4th International Conference on Ground Movement and Structures*, pp. 671–697, Cardiff, Wales, July 1991.

[10] C. Sagaseta, "Analysis of undrained soil deformation due to ground loss," *Geotechnique*, vol. 37, no. 3, pp. 301–320, 1987.

[11] A. Verruijt and J. R. Booker, "Surface settlements due to deformation of a tunnel in an elastic half plane," *Geotechnique*, vol. 46, no. 4, pp. 753–756, 1996.

[12] N. Loganathan and H. G. Poulos, "Analytical prediction for tunneling-induced ground movements in clays," *Journal of Geotechnical and Geoenvironmental Engineering*, vol. 124, no. 9, pp. 846–856, 1998.

[13] J. Litwiniszyn, "Fundamental principles of the mechanics of stochastic media," in *Proceedings of the 3rd Congress on Theoretical and Applied Mechanics*, pp. 93–110, Bangalore, India, 1957.

[14] J. Litwiniszyn, "The theories and model research of movements of ground masses," in *Proceedings of the European Congress on Ground Movement*, pp. 202–209, University of Leeds, Leeds, UK, April 1957.

[15] L. Baochen and L. Dezhang, "The application of stochastic medium theory to the problem of surface movements due to open pit mining," in *Stability in Surface Mining*, chapter 16, pp. 407–416, New York, NY, USA, 1982.

[16] B. C. Liu, "Stochastic medium theory and its application in the settlement problems," *Comprehensive Rock Engineering*, vol. 4, pp. 780–816, 1993.

[17] J. S. Yang, B. C. Liu, and M. C. Wang, "Modeling of tunneling-induced ground surface movements using stochastic medium theory," *Tunnelling and Underground Space Technology*, vol. 19, no. 2, pp. 113–123, 2004.

[18] X. L. Yang and J. M. Wang, "Ground movement prediction for tunnels using simplified procedure," *Tunnelling and Underground Space Technology*, vol. 26, no. 3, pp. 462–471, 2011.

[19] R. W. Cooke, G. Price, and K. Tarr, "Jacked piles in London clay: a study of load transfer and settlement under working conditions," *Geotechnique*, vol. 29, no. 2, pp. 113–147, 1979.

[20] F. Meng, J. S. Zhang, and H. Y. Liu, "Analysis of ground movement in pile driving based on stochastic medium theory," *Applied Mechanics and Materials*, vol. 438-439, pp. 1404–1408, 2013.

[21] Q. Q. Zhang and Z. M. Zhang, "A modified shear displacement method for calculating settlement of single pile," *Advanced Materials Research*, vol. 261–263, pp. 1804–1808, 2011.

[22] K. M. Rollins, R. J. Olsen, J. J. Egbert, D. H. Jensen, K. G. Olsen, and B. H. Garrett, "Pile spacing effects on lateral pile group behavior: load tests," *Journal of Geotechnical and Geoenvironmental Engineering*, vol. 132, no. 10, pp. 1262–1271, 2006.

[23] K. M. Rollins, K. G. Olsen, D. H. Jensen, B. H. Garrett, R. J. Olsen, and J. J. Egbert, "Pile spacing effects on lateral pile group behavior: analysis," *Journal of Geotechnical and Geoenvironmental Engineering*, vol. 132, no. 10, pp. 1272–1283, 2006.

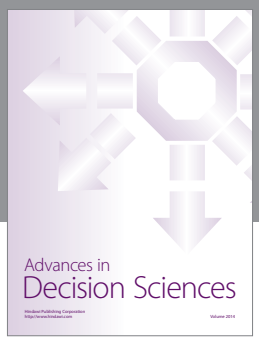

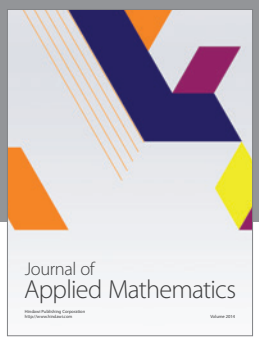

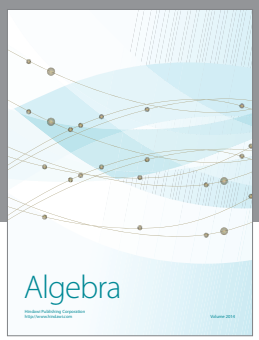

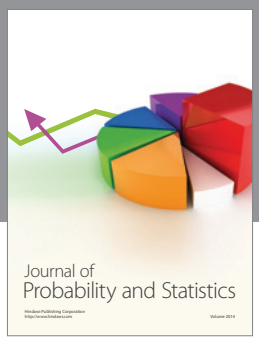

Hindawi

Submit your manuscripts at
http://www.hindawi.com