Hindawi
Mathematical Problems in Engineering
Volume 2018, Article ID 8547141, 14 pages
https://doi.org/10.1155/2018/8547141

Research Article

Reliability Modeling of Electromechanical System with Meta-Action Chain Methodology

Genbao Zhang and Yang Wang

College of Mechanical Engineering, Chongqing University, Chongqing, 400030, China

Correspondence should be addressed to Yang Wang; yangwang_me@foxmail.com

Received 2 August 2017; Revised 17 January 2018; Accepted 13 February 2018; Published 23 April 2018

Academic Editor: Maria Patrizia Pera

Copyright © 2018 Genbao Zhang and Yang Wang. This is an open access article distributed under the Creative Commons Attribution License, which permits unrestricted use, distribution, and reproduction in any medium, provided the original work is properly cited.

To establish a more flexible and accurate reliability model, the reliability modeling and solving algorithm based on the meta-action chain thought are used in this thesis. Instead of estimating the reliability of the whole system only in the standard operating mode, this dissertation adopts the structure chain and the operating action chain for the system reliability modeling. The failure information and structure information for each component are integrated into the model to overcome the given factors applied in the traditional modeling. In the industrial application, there may be different operating modes for a multicomponent system. The meta-action chain methodology can estimate the system reliability under different operating modes by modeling the components with varieties of failure sensitivities. This approach has been identified by computing some electromechanical system cases. The results indicate that the process could improve the system reliability estimation. It is an effective tool to solve the reliability estimation problem in the system under various operating modes.

1. Introduction

During recent decades, the electromechanical systems have been widely used in the industrial field. Therefore, the importance of the reliability of electromechanical systems has increased accordingly. On the other hand, the growing complexity of systems has made the job of reliability modeling more challenging. Many qualitative and quantitative techniques have been proposed to analyze the reliability. Traditional methods are effective under the hypothesis that system reliability can be described by macroscopic stochastic models while pure probability models only describe the stochasticity of failures in system level without considering failure mechanism. This paper is proposed to identify the connection between macroscopic system failure probability and microscopic failure cause. System operation information and structure information are integrated into the model to describe the state changes for a given system. In fact, macroscopic system operation is the input of the microscopic failure processes of each component in the system. On the other hand, the microscopic failure processes make up the macroscopic stochastic model. Herein, meta-action structure chain and operating series chain are proposed in this paper to combine these two aspects.

System reliability modeling has been widely used in researches in recent years [1–7]. In the previous research, the failure modes and effects analysis (FMEA) has been often used to determine the criticality and frequency of failure. Yang et al. [8] presented cubic transformed functions of FMEA. Kim et al. [9] summarized the limitations of the FMEA methods. Besides, fault tree analysis (FTA) is always utilized to calculate the probability of failures [10–16]. Majdara and Wakabayashi [17] put forward a component-based modeling of systems for the automated fault tree generation. Lindhe et al. [18] optimized the FTA with the approximate calculations.

In addition, the fuzzy set theory and Bayesian approach have been widely used especially in the cases that the

systems have small sample [19–21]. Marquez et al. [19] utilized Bayesian to propose improved reliability. Bae et al. [20] utilized the Bayesian approach to model the two-phase degradation. Sun et al. [21] adopted the fuzzy fault tree analysis to make fault diagnosis for the servo system. These static reliability models have shown advantages in reliability analysis for the electromechanical systems in the industrial fields. However, these methods cannot model the multistate nature of the systems. If system operation does not satisfy the rated conditions, these stochastic models would not be effective. In recent years, the research on dynamic reliability has made a considerable contribution to the system reliability modeling in terms of overcoming the mentioned shortcoming. Wang et al. [22] defined the system status as reliability block diagrams to model different operating regimes of a parallel system. Chiacchio et al. [23] proposed a stochastic automaton model and developed a Simulink environment to integrate the features of a dynamic system. This model considers the multistate operational and failure nature of a system. Compared with static methods, dynamic reliability modeling is much more suitable for industrial application, having a vast research potential.

In this paper, system operation is expressed as state transitions versus time dimension and the state of the system is expressed with all the status of meta-actions. State transitions of the specific meta-action are utilized to combine the information of failure modes. Traditional reliability modeling estimates the system reliability with system operating time. In fact, the operating time of each component in the system has an implicit function to the total operating time of the whole system and some failures are even not sensitive to the operating time (e.g., sensitive to rotation numbers and total travel). System structure information, operating information, and failure information should be integrated into one reliability model to make reliability estimation more practical.

Thus, the impact of the paper can be summarized as follows:

(1) The meta-action chain method is presented, which can be used to integrate the structure information and operating information to estimate the reliability for the electromechanical system. The definition and calculation of the formula are given to support the modeling.

(2) The reliability solving algorithm is designed to solve the Markov transfer matrices and the reliability curve. The discretization approach is used to solve the discontinuous time interval.

(3) The proposed methods in this thesis establish the relationship between the microscopic failure modes and the macroscopic reliability estimation. More information from the accelerated loading experiments should be taken into consideration in the modeling, making the reliability curve more reasonable and precise.

The rest of the thesis is organized as follows: Section 2 introduces some basic theories used in the modeling; the meta-action chain methodology (MCM) is presented in Section 3; Section 4 introduces the reliability estimation for an electromechanical system; In Section 5, an example is presented to illustrate the proposed approach and some comparisons with the existing approaches are discussed; Conclusion is made in the final section.

2. The Meta-Action Theory and Markov Model

The Pedigree-Function-Movement-Action (PFMA) structural decomposition shown in Figure 1 is proposed to study the operation of the electromechanical system [24–27]. Herein, the action is defined as the geometric position variation of a component in the system. The definition of meta-action is a structure-independent action to realize the specific function. Meta-action cannot be further decomposed. The motions of the electromechanical system may be complicated while the meta-actions must be simple. Components in the electromechanical only have two types of meta-action. One is rotation, such as rotations of motor, screw, gear, and shaft. The other is translation, like the translation of nut and piston. This decomposition can establish the motion model for the electromechanical systems.

The meta-action theory has been utilized in the study of precision control and assembly reliability analysis. This method focuses on the minimum fault analytical unit to precisely control the reliability of the electromechanical system as shown in Figure 2 and Figure 3. Furthermore, the meta-action decomposition has established the relationship between the faults and component actions. Compared with traditional modeling, not only the structural information of the system but also the functions of the system are considered in meta-action modeling. Such approach shows great advantage in the reliability analysis and assembly precision analysis for complex electromechanical systems.

Markov method has been widely applied in the research of the random process [28]. Let $\{X_n,\ n = 0, 1, 2, \ldots\}$ denote the nonnegative integer random sequence in the state space $\Omega = \{0, 1, 2, \ldots, N\}$, $\forall N > 0,\ 0 \le n_1 < n_2 < \cdots < n_k < \cdots < n\ i_1, i_2, \ldots, i_{N-1},\ i, j \in \Phi$ in the given condition that the probability $P(X_n = i, X_{n_k} = i_k,\ 1 \le k \le N) > 0$ if $P(X_{n+m} = j \mid X_n = i,\ X_{n_k} = i_k,\ 1 \le k \le N) = P(X_{n+m} = j \mid X_n = i),\ m > 0$ then $\{X_n,\ n = 0, 1, 2, \ldots\}$ is a discrete-time Markov chain. The Markov chain can be used to describe the state transitions of the complex electromechanical systems. This simple stochastic mathematical model has been developed deeply during the recent decades and has become a mature theoretical model.

3. The Meta-Action Chain Methodology

As meta-action focuses on the basic moving unit of the system, this method is used to analyze the system precisely. However, the reliability and precision are controlled by optimizing the sensitive parameters of the single essential meta-action in the former research. The failure mechanism and work mode effect are not included in the traditional modeling. On the one hand, the meta-action chain methodology (MCM) is put forward in this chapter to solve these problems. On the other hand, the traditional Markov chain methods in the reliability research only focus on the failure probability in the

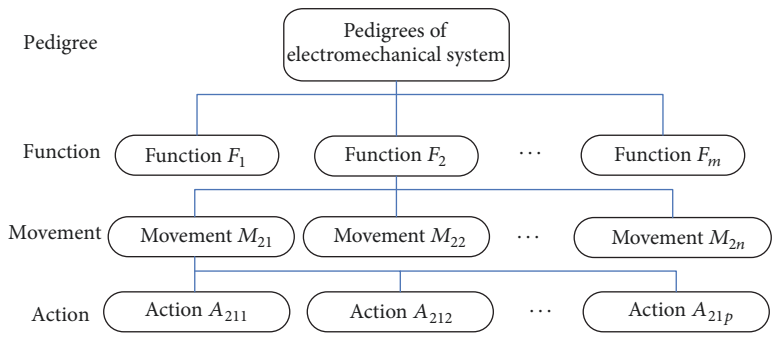

Figure 1: PFMA structural decomposition for electromechanical system.

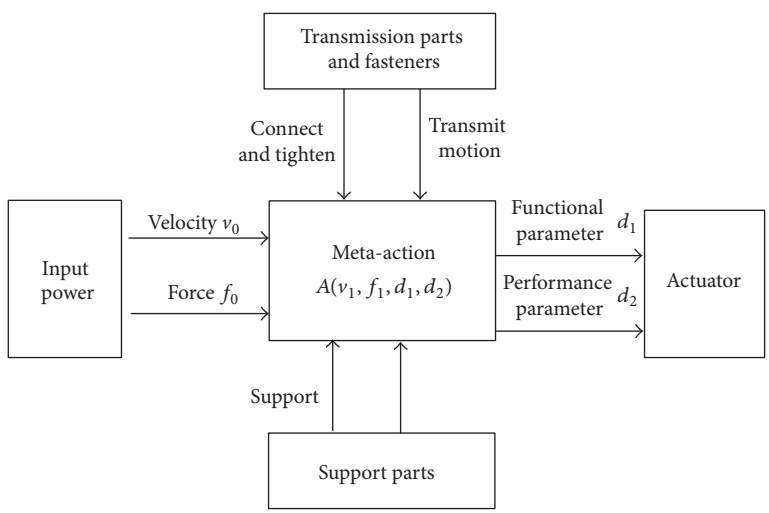

Figure 2: Meta-action assembly unit.

given states of the system. The relationship between the states selection and system operation has not been established. In the MCM model proposed by this study, the system operating states are represented by the meta-actions matrix and the mapping matrix. The meta-actions in each state have their own computing chains to ensure the consistency with the failure mechanism.

3.1. Definition of Meta-Action Chain. The definition of a meta-action chain is a series of ordered meta-actions that is driven by the same power input to describe the states of specific function in given condition and operating mode. Two kinds of information are considered in the meta-action chain. One is structure information and the other is operating state information. Meta-action chain includes two parts, the structure chain and operating series chain. The operating series chain can be mapped into the Markov chain for different working modes.

In structure chain, there are I power inputs (usually motors) denoted as P and meta-actions are denoted as A^s. The structure chain is the universal set of meta-actions and it contains all the elements used in operating chain. The outputs of each line is the actuator denoted as O. The number of outputs O for each input power P_i is l_i. For example, the number of outputs for the first input power is l_1. As the transmission chain may have two or more outputs, the meta-action chain would have branches, shown as $A^s{}_{1i}$, $A^s{}_{1j}$, and $A^s{}_{1k}$ in Figure 4. This structure decomposition is able to express the operation for electronic systems clearly.

To realize specific operation cycle, electromechanical systems work orderly action by action as shown in Figure 5. From function 1 to function F, system states change from S_{11} to S_{FfF}. Here, S_{11} means the first state in function 1 and S_{12} means the second state in function 1. Then, S_{FfF} means the f_Fth state in function F. f_i refers to the number of states in function i. In state S_{11}, there are S_{11} meta-actions operating together. During the operation cycle, all the meta-actions compose a meta-action operating series chain to describe the states that the system changes into. $A_{11,1}$ is another expression of meta-action and refers to the first meta-action in the first state of function 1. For example, $A_{11,1} = A^s{}_{11}$ means that the mentioned meta-action is $A^s{}_{11}$ in the structure.

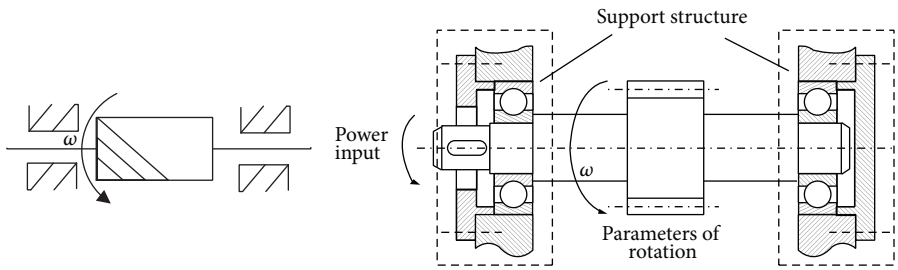

Figure 3: Meta-action of gear shaft rotation assembly unit.

3.2. The Reliability Calculation of MCM. To determine the reliability of each state for the system, the operating meta-action chain is expressed by the Boolean variable matrices. The universal set of the metaactions $A^s{}_U$ is

$$A^s{}_U = \{A^s{}_{11}, A^s{}_{12}, \ldots, A^s{}_{1N1}, A^s{}_{21}, A^s{}_{22}, \ldots, A^s{}_{2N2}, \ldots, A^s{}_{INI}\}. \quad (1)$$

Herein, Ni is the number of the structure meta-actions in the ith power input. Subsequently, the state of the system can be expressed as a one-dimensional matrix.

$$A_{ij,k} = \begin{cases} 1, & \text{the meta-action is operating} \\ 0, & \text{the meta-action is not operating.} \end{cases} \quad (2)$$

For example, if $A^s{}_U = \{A^s{}_{11}, A^s{}_{12}, A^s{}_{13}, A^s{}_{14}, A^s{}_{21}, A^s{}_{22}, A^s{}_{23}, A^s{}_{31}, A^s{}_{32}, A^s{}_{33}$, and $A^s{}_{34}\}$ and $S_{11} = \{A^s{}_{11}, A^s{}_{12}, A^s{}_{14}, A^s{}_{21}, A^s{}_{31}, A^s{}_{33}$, and $A^s{}_{34}\}$, then $M_{S11} = [11011001011]$. The electromechanical system changes from one state to another in the given operating series. If the state changes into the wrong state, the system is considered to have a fault. The reliability of the system is the probability that all the given state series of the system can be reached successfully.

Figure 6 provides an example of four states to show the state transition of the system. The system state changes from S_{11} to S_{22}. If the system changes into the wrong state, a failure will occur. $P^n{}_{ij}$ means the probability that system state changes from state i to state j in n steps. In different running modes and different failure mechanisms, the reliability calculations of meta-actions are different.

Take one column as an example in Figure 7; it represents the states' change process of the specific meta-action.

In different operating modes, the state changes of the meta-actions are different. The operating mode information can be used in the modeling just as the failure mode information shown in Figure 8.

The common failure modes include degradation, switch fault, and alternating stress. The failure mechanism can be reflected on the meta-actions as clearly shown in the figure. If the meta-action is designed to always run during the operation, the column is full of 1 as the normal operation column in the figure. When the degradation failures happen, the continuous state changes from 1 to 0. The second type of failure is the switch fault. The reliability of such kind of meta-action depends on the probability of successful action. The failure occurs when the state is not able to change. The third kind of failure is the alternating stress failure. The state change frequency of such type of meta-action is high, which may cause additional degradation to the function units. Thus, the reliability calculations for the three kinds of meta-actions are different.

In the degradation process, the reliability of meta-action depends on the operating time. The operating time is expressed as the discrete variable. In the given time interval δ, the meta-action state remains unchanged. δ is the sampling interval and is also the resolution of the calculation. The operating time is calculated by the number of time intervals n_d. The switch fault is sensitive to the number of the switch times. The frequency of action is n_s and the failure rate λ is considered as a constant. The alternating stress may cause additional degradation to the function unit. The correction coefficient k_N is used to modify the formula.

PLP (Power Law Process) is utilized to model the failure density function in the degradation process.

$$\begin{aligned} f_{\text{de}}(t) &= \alpha\beta t^{\beta-1}, \quad \alpha > 0, \quad \beta > 0; \quad t \geq 0 \\ F_{\text{de}}(t) &= 1 - P_{\text{de}}(T > t) = 1 - \int_0^t f_{\text{de}}(t)\, dt; \end{aligned} \quad (3)$$

α is the size parameter, β is the shape parameter, $F_{\text{de}}(t)$ is the degradation failure probability, and T is the time between failures.

The failure rate of switch failure λ is considered as constant during the operation as the statistic result shows that it is low and changes little.

$$\begin{aligned} \lambda_{\text{sw}}(t) &= \lim_{\Delta t \to 0} \frac{1}{\Delta t} P_{\text{sw}}(t < T < t + \Delta t \mid T > t) \\ F_{\text{sw}}(n\delta) &= F_{\text{sw}}[(n-1)\delta] \cdot (1 - \lambda_{\text{sw}} \cdot \delta). \end{aligned} \quad (4)$$

LND (Logarithmic Normal Distribution) is used to model the probability density function in the alternating stress process.

$$\begin{aligned} f_{\text{as}}(t) &= \frac{1}{t \cdot k_N \sigma \sqrt{2\pi}} e^{-(\ln t - k_N \mu)^2 / 2k_N^2 \sigma^2} \\ k_N &= \sqrt[m]{\frac{N_0}{N}}. \end{aligned} \quad (5)$$

The correction coefficient k_N depends on the standard cycle times N_0, the index of stress state m, and the cycle times

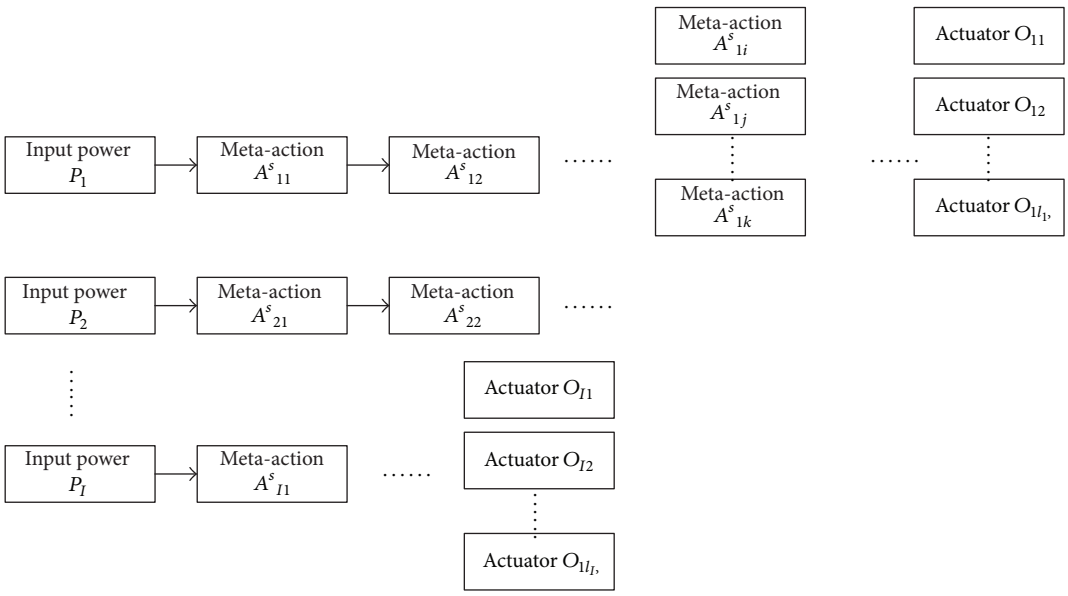

Figure 4: Meta-action structure chain.

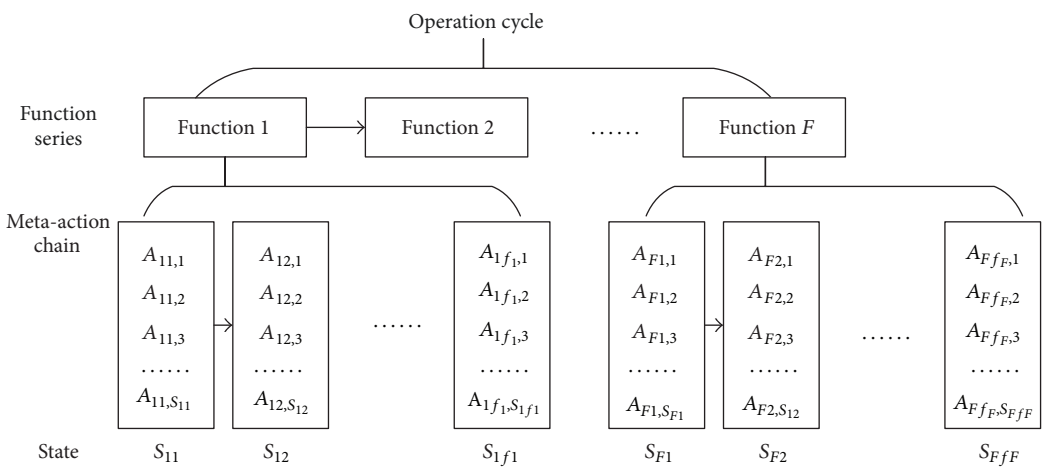

Figure 5: Meta-action operating series chain.

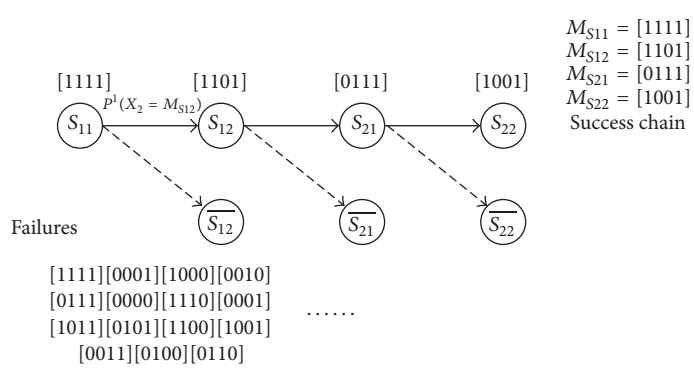

Figure 6: State transition directed graph.

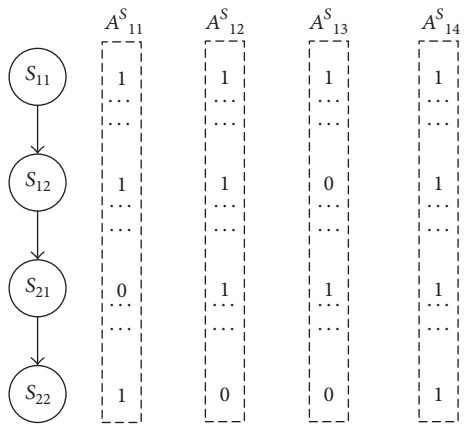

Figure 7: States change of specific meta-action.

Table 1: Failure modes of each meta-action.

Meta-action	Degradation	Alternating	Switch
$A^s{}_{11}$	Y	Y	Y
$A^s{}_{12}$	Y	Y	N
$A^s{}_{13}$	Y	Y	N
$A^s{}_{14}$	Y	Y	N
$A^s{}_{15}$	Y	Y	N
$A^s{}_{21}$	N	N	Y
$A^s{}_{22}$	Y	N	Y
$A^s{}_{23}$	Y	Y	Y
$A^s{}_{24}$	Y	N	N
$A^s{}_{25}$	Y	N	N
$A^s{}_{31}$	Y	N	Y
$A^s{}_{32}$	Y	N	N

N. Usually, $N_0 = 10^7$ and $m = 9$. μ is logarithm to the standard cycle time T_0 and σ is variation.

On the other hand, the reliability of the whole system at time t is expressed as the product of reliability of all the meta-actions. Herein, the reliability model of the system is considered as a series model. Different failure modes happen independently.

$$\begin{aligned} R(t) &= \prod_{j=1}^{I}\prod_{i=1}^{N_j} R_{A_{ji}}(t) \\ R_{A_{ji}}(t) &= \left[1 - F_{\text{de}}^{A_{ji}}(t)\right]\cdot\left[1 - F_{\text{sw}}^{A_{ji}}(t)\right] \\ &\quad \cdot\left[1 - F_{\text{as}}^{A_{ji}}(t)\right]. \end{aligned} \tag{6}$$

Reliability transfer matrix T of each meta-action at time t is calculated in the Markov chain form.

$$T^{A_{ji}} = \begin{matrix} p_{00}^{A_{ji}} & p_{01}^{A_{ji}} & \cdots & p_{0n_d}^{A_{ji}} \\ p_{10}^{A_{ji}} & p_{11}^{A_{ji}} & \cdots & p_{1n_d}^{A_{ji}} \\ \vdots & \vdots & \ddots & \vdots \\ p_{n_d0}^{A_{ji}} & p_{n_d1}^{A_{ji}} & \cdots & p_{n_dn_d}^{A_{ji}} \end{matrix}. \tag{7}$$

$p_{uv}^{A_{ji}}$ refers to the probability that meta-action A_{ij} translates from state u to state v.

A flow chart is shown in Figure 9 to illustrate the calculation algorithm.

4. Reliability Estimation for the Electromechanical System with MCM

The subsystem of a CNC machine tool is used to illustrate the method proposed by this thesis. The structure is presented in Figure 10.

The subsystem is used to realize the indexing rotation function of the rotary table. And the meta-action structure chain is established in Figure 11.

The universal set of meta-actions $A^s{}_U$ is

$$\begin{aligned} A^s{}_U = \{&A^s{}_{11}, A^s{}_{12}, A^s{}_{13}, A^s{}_{14}, A^s{}_{15}, A^s{}_{21}, A^s{}_{22}, A^s{}_{23}, A^s{}_{24}, \\ &A^s{}_{25}, A^s{}_{31}, A^s{}_{32}\}. \end{aligned} \tag{8}$$

A typical work circle of the system concludes 2 functions, including the exchanging worktable and indexing table. The operating series chains of the functions are shown in Figure 12.

Figure 13 is a timing sequence diagram of the system. This figure reflects the time variation of the rotation angle of the worktable in a given working condition. θ is the rotation angle of the worktable. S is the load mass of the system. P is the hydraulic pressure. V is the rotational speed.

The operation time of this cycle is 1 hour (3600 seconds) and the worktable needs to be exchanged before each cycle in 5 minutes (300 seconds). Thus, the sampling interval δ in 1 second is selected and a 3900×12 operating states matrix M. $n_d = 3900$ is created as shown in Figure 14.

The failure modes of each meta-action can be determined by the operating states matrix and the previous failure data. Table 1 presents the failure modes of each meta-action. Table 2, Table 3, and Table 4 present distribution function parameters of each meta-action.

Pseudocodes of the solving algorithm are as follows:

for $t = 0,\ t < n_d \cdot \delta,\ t = t + \delta$;

for $j = 1,\ j < I,\ j++$;

for $i = 1,\ i < N_j,\ i++$;

if switch (A_{ji}) then $N_{A_{ji}}^{\text{sw}}++$;

if alternating stress (A_{ji}) then $N_{A_{ji}}^{\text{as}}++$;

$k_N(t);\ F_{\text{de}}^{A_{ji}}(t);\ F_{\text{sw}}^{A_{ji}}(t);\ F_{\text{as}}^{A_{ji}}(t);$

$p_{t-\delta,t}^{A_{ji}};\ T^{A_{ji}};\ R_{A_{ji}}(t);$

$R(t)$;

end;

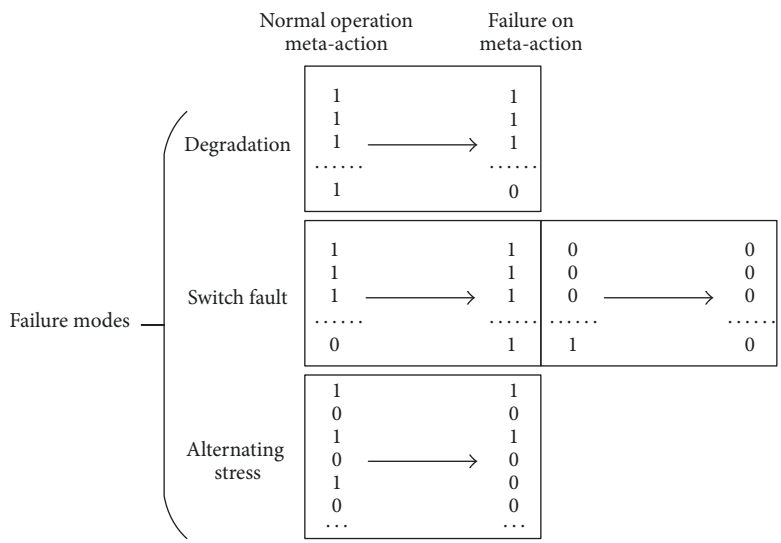

Figure 8: Failure modes on different meta-actions.

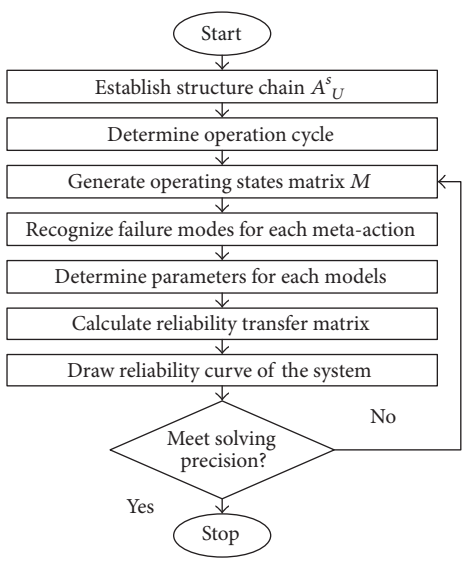

Figure 9: Flow chart of reliability calculation.

5. Numerical Example

The original failure data of the given system are obtained from experiments, customer survey, and customer service data. The parameters of reliability models are determined by the fitting probability density function. They are listed in Table 1. Herein, time t is calculated by the hour.

5.1. The Reliability Estimation for the Standard Operating Mode. At the beginning of the curve, the reliability of the system decreases smoothly as the main failure mode is degradation. After 3000 hours, the number of alternating stress cycles reaches the critical value. Thus, the reliability of the system decreases sharply for the reason that the main failure mode changes into the alternating stress. This curve is smooth and the turning point is clear. The solving accuracy is acceptable.

The traditional reliability estimation models the system reliability curve with Weibull distribution as shown in Figure 15. The test result under the significance level of 5% is ksstat = 0.0740 < cv = 0.1112, indicating that the hypothesis is not rejected. The shape parameter k is 1.8035 and the scale parameter λ is 8125.8331.

Compared with the Weibull distribution, the MCM curve contains more failure modes information. In fact, in the given working condition, alternating stress failures occur more frequently than degradation failures after 3000 hours. On the other hand, the Weibull distribution curve is still smooth after the occurrence of the critical value. The traditional modeling methods cannot describe such kind of trend. If the MCM

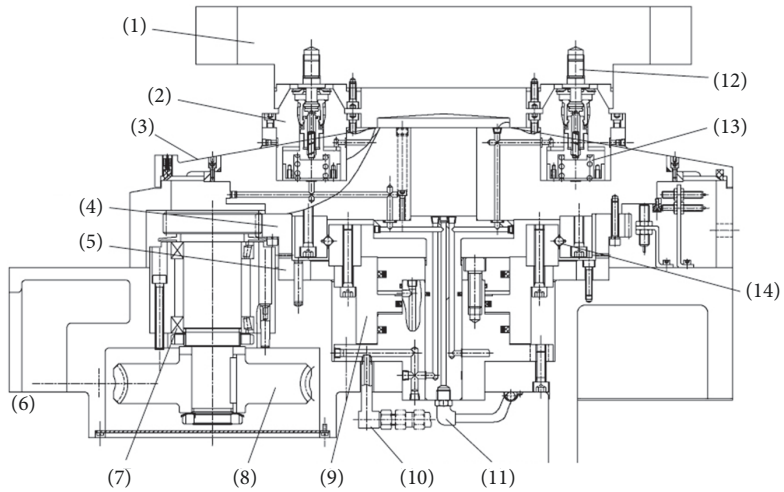

Figure 10: NC rotary table structure diagram. (1) Worktable, (2) taper, (3) cover, (4) upper teeth, (5) lower teeth, (6)motor, (7) bearing of gear shaft, (8) worm gear, (9) lift cylinder, (10) oil circuit for locking hydraulic cylinder, (11) oil circuit for lift cylinder, (12) pull screw, (13) spring, and (14) bearing of revolution body.

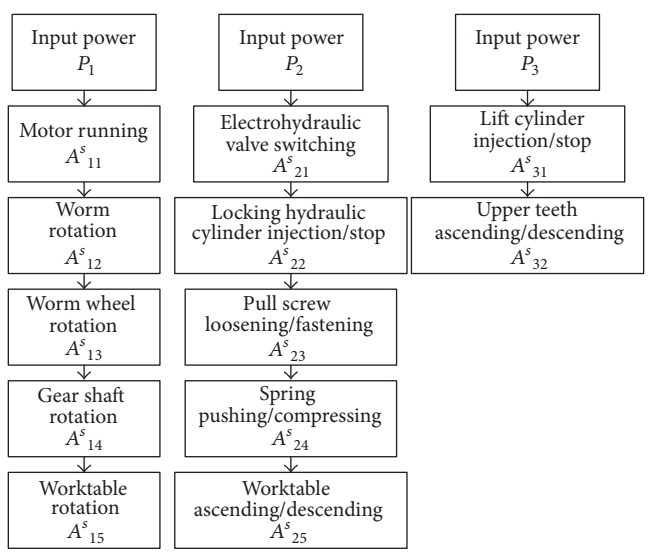

Figure 11: Meta-action structure chain of NC rotary table.

method is set as the benchmark, a cumulative relative error of Weibull distribution is shown as follows:

$$\varepsilon_{\text{rel}} = \sum_{i=1}^{N} \frac{\left| R_{\text{MCM}}^{(i)} - R_{\text{Weibull}}^{(i)} \right| / R_{\text{MCM}}^{(i)}}{N} = 0.0198. \quad (9)$$

This value shows the difference between the two methods directly. Generally, the two methods can reflect the overall trend of the failure rate of the given system. According to some specific details, the maximum error of these two methods is observed in $\varepsilon_{\max} = 0.0581$. And the proposed MCM method result shows more realistic behavior than the traditional Weibull distribution.

5.2. Reliability Estimation for Different Operating Modes. The system reliability in different operating modes is estimated to show the failure effects from each operating parameter. In other operating modes, the timing sequence diagrams of the system are different from the standard operating mode. Hence, the operating states matrices are also different. Three typical operating modes are utilized to illustrate the MCM model as Figure 16 presents.

In operating mode 2, the degradation time of the system decreases into half of the standard and the number of alternating stress cycle numbers decreases into quarter. In operating mode 3, the number of the alternating stresses decreases into half while in operating mode 4, the alternating stress cycle number increases to 2.5 times.

The results in Figure 17 clearly show the dynamic trend of system reliability. In operating mode 2, system reliability decreases slowly and smoothly. The failure rates of both degradation and alternating stress keep in a low level. The reliability

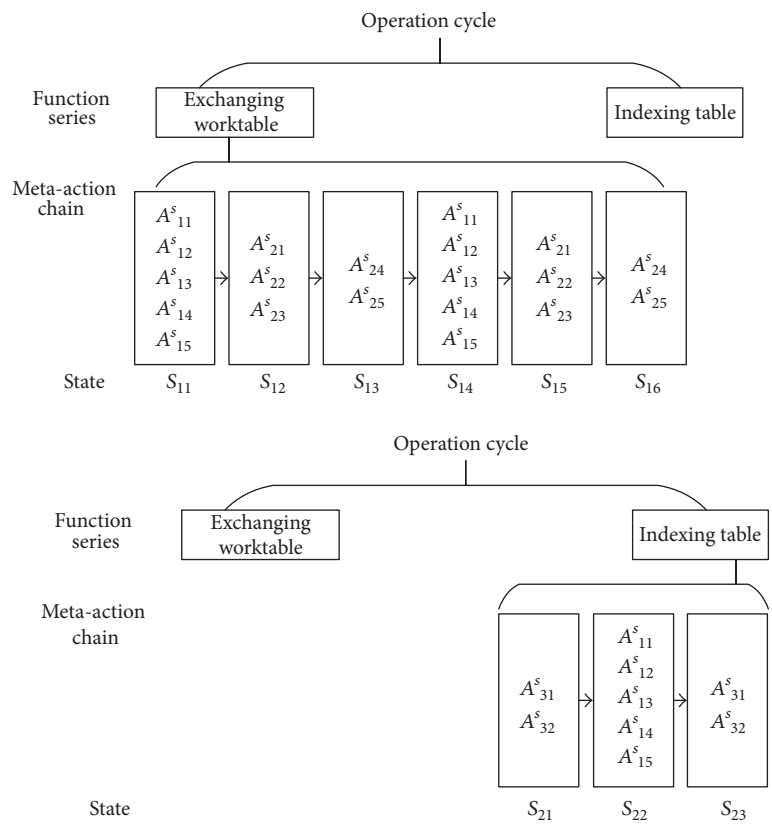

Figure 12: Operating series chains of the functions. S_{11}: worktable returns home. S_{12}: electrohydraulic valve switches. S_{13}: worktable ascends. S_{14}: worktable rotates 180°. S_{15}: electrohydraulic valve switches. S_{16}: worktable descends. S_{21}: upper teeth ascend. S_{22}: index table. S_{23}: upper teeth descend.

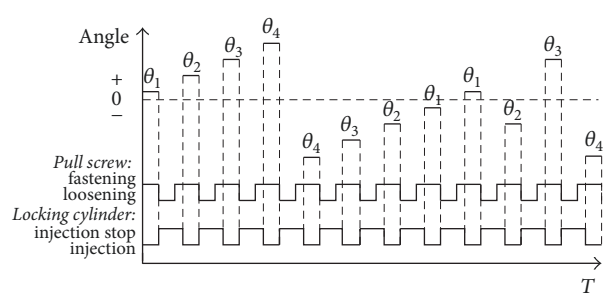

Figure 13: Timing sequence diagram of the system. $\theta_1 = 5^\circ$, $\theta_2 = 10^\circ$, $\theta_3 = 15^\circ$, $\theta_4 = 20^\circ$, $S = 500$ kg, $P = 6.5$ MPa, and $V = 1.2$ r/min.

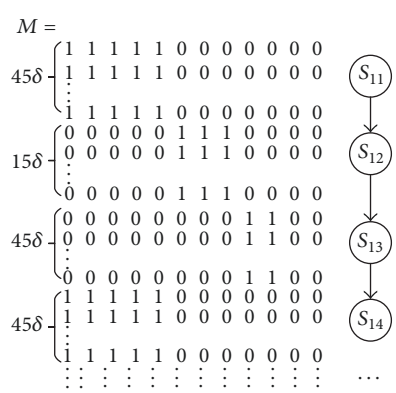

Figure 14: Operating states matrix M.

Table 2: Degradation failure distribution function parameters of each meta-action.

Meta-action	α	β
$A^s{}_{11}$	$1.2e-7$	1.21
$A^s{}_{12}$	$2.3e-7$	1.43
$A^s{}_{13}$	$7.2e-7$	1.12
$A^s{}_{14}$	$2.1e-7$	1.44
$A^s{}_{15}$	$1.5e-7$	1.25
$A^s{}_{22}$	$1.8e-7$	1.31
$A^s{}_{23}$	$4.3e-7$	1.35
$A^s{}_{24}$	$6.8e-7$	1.17
$A^s{}_{25}$	$7.7e-7$	1.03
$A^s{}_{31}$	$5.6e-7$	1.24
$A^s{}_{32}$	$3.3e-7$	1.12

Table 3: Switch failure rate of each meta-action.

Meta-action	λ
$A^s{}_{11}$	$8.1e-7$
$A^s{}_{21}$	$7.3e-7$
$A^s{}_{22}$	$4.4e-7$
$A^s{}_{23}$	$9.7e-7$
$A^s{}_{31}$	$6.3e-7$

Table 4: Alternating stress failure distribution function parameters of each meta-action.

Meta-action	μ	σ
$A^s{}_{11}$	9.5	2.8
$A^s{}_{12}$	10	2.3
$A^s{}_{13}$	9.9	3.1
$A^s{}_{14}$	10.1	3.4
$A^s{}_{15}$	10.2	3.2
$A^s{}_{23}$	9.8	2.9

curve of mode 2 is smooth. The degradation failure processes of mode 3 and mode 4 are the same as the standard work mode. Thus, the fronts of three curves are superimposable. In mode 4, the reliability curve decreases sharply after 2800 hours as the alternating stress failure mode reaches the critical value. The curve in mode 3 keeps smooth.

The operating modes influence the system reliability evidently. However, the traditional reliability estimation only focuses on system reliability in the particular working condition and operating mode. Operating parameters and structure information are not used. This limits the application of the modeling. The meta-action chain method uses the structure chain and operating chain to solve the problem.

5.3. Reliability Estimation for Other Electromechanical Systems. Figure 18 is the structure of a lifting part of tray automatic exchanging device.

As the function of this system is not complex (only exchanging tray), its failure rate is sensitive to the exchange frequency. According to the former failure data, only three

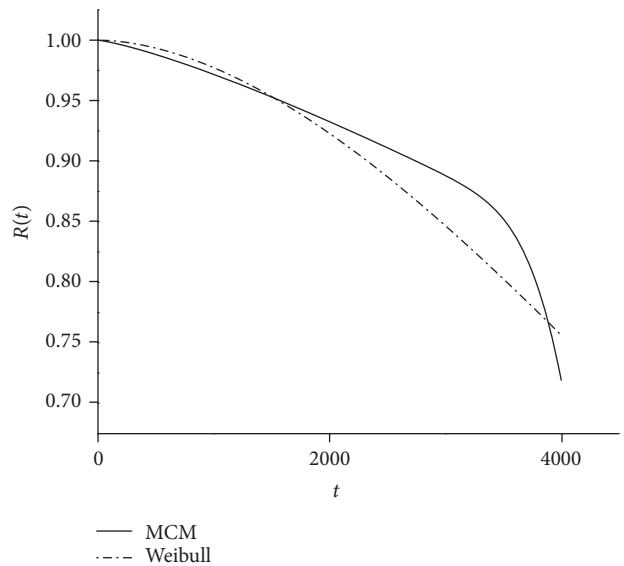

Figure 15: Reliability estimation for the NC rotary table with MCM and Weibull distribution.

Table 5: Failure modes of the lifting part.

Meta-action	Failures	Failure modes
Rack moving: $A^s{}_{11}$	Stuck rack	Degradation
Gear shaft rotation: $A^s{}_{12}$	Broken shaft	Alternating stress
	Worn shaft	Degradation
Lift hydraulic cylinder moving: $A^s{}_{13}$	Stuck cylinder	Switch

Table 6: Cumulative relative errors and maximum errors.

Exchange frequency	ε_{rel}	ε_{max}
8 min^{-1}	0.0032	0.0087
10 min^{-1}	0.0044	0.0070
12 min^{-1}	0.0108	0.1481

meta-action failures were observed during the service life as shown in Table 5.

Both the MCM and Weibull distribution are utilized to estimate the system under the y 8 min^{-1}, 10 min^{-1}, and 12 min^{-1} exchange frequency. The results are presented in Figure 19.

Cumulative relative errors and maximum errors are presented in Table 6.

As the failure mechanisms of this example are simpler than the former one, there exists the difference between the two methods, as shown in Table 6. With the increment of the exchange frequency, the sensitivity of system failure changes from time dimension to the combination of time and exchange numbers. At a low exchange frequency, there is little difference between the MCM and Weibull distribution for the reason that system failure is sensitive to the time dimension. Both of the two methods can reflect such kind of trend. However, as the exchange frequency increases, the traditional Weibull distribution needs to be refreshed frequently to

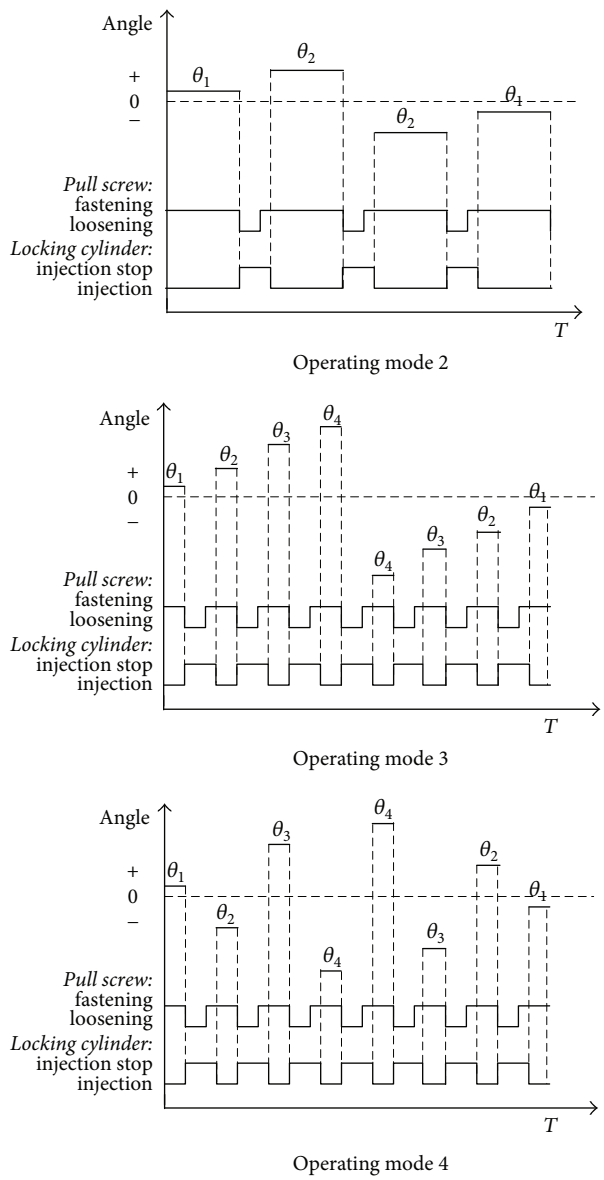

Figure 16: Timing sequence diagrams of the system. $\theta_1 = 5^\circ$, $\theta_2 = 10^\circ$, $\theta_3 = 15^\circ$, $\theta_4 = 20^\circ$, $S = 500$ kg, $P = 6.5$ MPa, and $V = 1.2$ r/min.

adjust the changeable failure mechanism. For instance, in the frequency of 10 min^{-1}, at 2000 h, the shape parameter k is 1.6133 and the scale parameter λ is 8625.2314, while at the 3000 h shape parameter, k is 1.8221 and the scale parameter λ is 7636.5287. On the other hand, MCM is much more stable as the independent input data of each meta-action are more than the data of the system operation. Besides, system failure data and meta-action data are combined as the input of MCM instead of the only system failure. For these reasons, MCM can estimate the system dynamic reliability precisely.

6. Conclusions

This paper presents the meta-action chain method to identify the connection between microscopic failure mechanism and microscopic system reliability calculation. The main scientific novelties are the modeling technique of the meta-action structure chain and operating series chain, reliability calculation modeling with Markov transferring matrices, and solving algorithm for industrial application.

The meta-action chain modeling technique defines system operation according to the states of each meta-action instead of the traditional reliability block diagram. The transitions of these states cause failures directly and the failure mechanism could be researched independently as failure sensitivity is much clearer. On the other hand, this method remains consistent with the traditional reliability modeling methods. Existing researches could be further developed and expanded by using microscopic failure data to obtain more precise and practical results.

Reliability calculation modeling uses the discretization approach to solve the discontinuous time interval. Solving

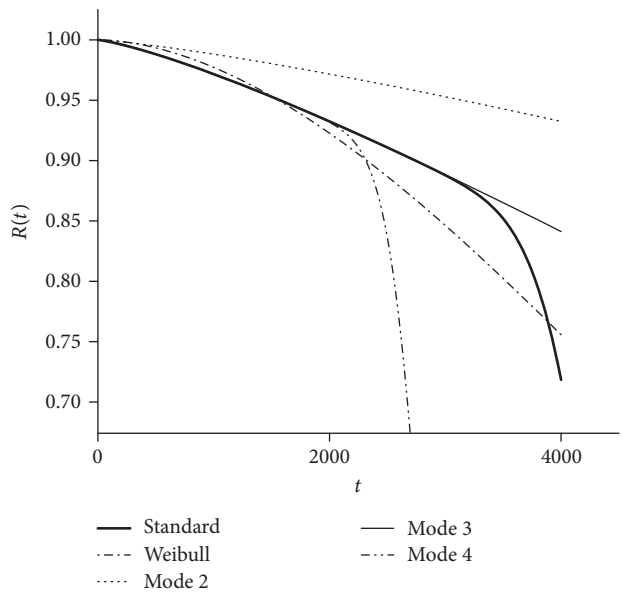

Figure 17: The reliability estimation for the NC rotary table in different operating modes with MCM.

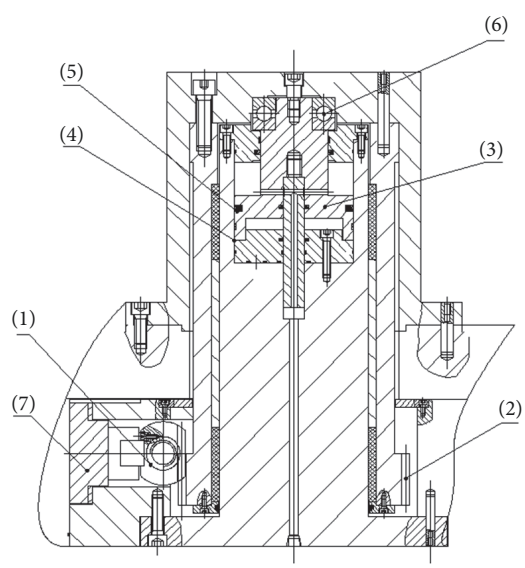

Figure 18: Structure sketch of the lifting part of a tray automatic exchanging device. (1) Rack, (2) gear shaft, (3) lifting piston, (4) lift hydraulic cylinder, (5) hydraulic cylinder seals, (6) end bearing, and (7) Slider.

algorithm and numerical examples are presented to illustrate the model. Case study shows that this algorithm is easy to realize and is appropriate for industrial application. In standard operating mode, the main failure mode of the given system changes from degradation to alternating stress after the critical value (3000 hours) and reliability decrease sharply. Meta-action method can express this trend instead of the totally smooth reliability curve calculated by the traditional Weibull distribution. Besides, reliability estimations for the system under different operating modes are also presented to prove the effectiveness of the proposed method. The system maintenance strategy would benefit from the results as more precise failure mode information can be acquired from the reliability curve.

The disadvantage of this method is that the state definition of each action should be discussed further. For example, the worm rotation with a 500 N load is much different from the one with a 1000 N load. In this paper, the states of these two situations are all 1. Future researches aim to use states matrices to describe the states of each meta-action instead of

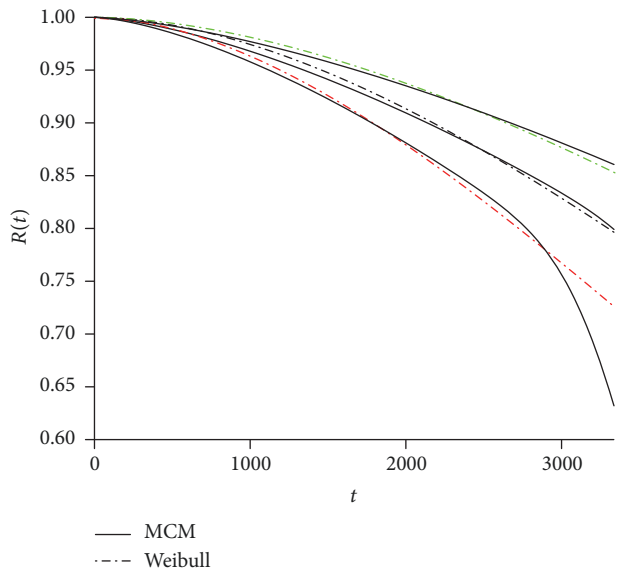

Figure 19: The reliability estimation for the lifting part of a tray automatic exchanging device.

Boolean variable. States transition should be described more precisely and the failure mechanism information should be integrated more accurately.

Conflicts of Interest

The authors declare that they have no conflicts of interest.

Acknowledgments

This project is supported by National Major Scientific and Technological Special Project for "High-Grade CNC and Basic Manufacturing Equipment," China (nos. 2013ZX04011-013 and 2013ZX04012-051).

References

[1] Y. Zhang and Z. Sun, "The reliability syllabus of mechanical products," *Jixie Gongcheng Xuebao/Journal of Mechanical Engineering*, vol. 50, no. 14, pp. 14–20, 2014.

[2] L. Xie, "Issues and commentary on mechanical reliability theories, methods and models," *Jixie Gongcheng Xuebao/Journal of Mechanical Engineering*, vol. 50, no. 14, pp. 27–35, 2014.

[3] A. Z. Keller, A. R. R. Kamath, and U. D. Perera, "Reliability analysis of CNC machine tools," *Reliability Engineering & System Safety*, vol. 3, no. 6, pp. 449–473, 1982.

[4] L. Huang, D. Liu, W. Yue, and X. Yin, "Reliability model reconstruction and simulation for mechanical equipment undergoing reassembly and maintenance," *Jixie Gongcheng Xuebao/Chinese Journal of Mechanical Engineering*, vol. 44, no. 6, pp. 224–230, 2008.

[5] N. Rasmekomen and A. K. Parlikad, "Maintenance optimization for asset systems with dependent performance degradation," *IEEE Transactions on Reliability*, vol. 62, no. 2, pp. 362–367, 2013.

[6] T. Li, Q. Jia, G. Chen, and H. Sun, "Motion reliability modeling and evaluation for manipulator path planning task," *Mathematical Problems in Engineering*, vol. 2015, Article ID 937565, 2015.

[7] D. W. Coit, J. L. Evans, N. T. Vogt, and J. R. Thompson, "A method for correlating field life degradation with reliability prediction for electronic modules," *Quality and Reliability Engineering International*, vol. 21, no. 7, pp. 715–726, 2005.

[8] Z. Yang, Y. Zhu, H. Ren, and Y. Zhang, "Comprehensive reliability allocation method for CNC lathes based on cubic transformed functions of failure mode and effects analysis," *Chinese Journal of Mechanical Engineering*, vol. 28, no. 2, pp. 315–324, 2015.

[9] K. O. Kim, Y. Yang, and M. J. Zuo, "A new reliability allocation weight for reducing the occurrence of severe failure effects," *Reliability Engineering & System Safety*, vol. 117, pp. 81–88, 2013.

[10] B. Kaiser, C. Gramlich, and M. Förster, "State/event fault trees-A safety analysis model for software-controlled systems," *Reliability Engineering & System Safety*, vol. 92, no. 11, pp. 1521–1537, 2007.

[11] R. Remenyte-Prescott and J. D. Andrews, "An efficient real-time method of analysis for non-coherent fault trees," *Quality and Reliability Engineering International*, vol. 25, no. 2, pp. 129–150, 2009.

[12] K. D. Rao, V. Gopika, V. V. S. Sanyasi Rao, H. S. Kushwaha, A. K. Verma, and A. Srividya, "Dynamic fault tree analysis using Monte Carlo simulation in probabilistic safety assessment," *Reliability Engineering & System Safety*, vol. 94, no. 4, pp. 872–883, 2009.

[13] G. Merle, J.-M. Roussel, J.-J. Lesage, and A. Bobbio, "Probabilistic algebraic analysis of fault trees with priority dynamic gates and repeated events," *IEEE Transactions on Reliability*, vol. 59, no. 1, pp. 250–261, 2010.

[14] J. Magott and P. Skrobanek, "Timing analysis of safety properties using fault trees with time dependencies and timed statecharts," *Reliability Engineering & System Safety*, vol. 97, no. 1, pp. 14–26, 2012.

[15] H. Xu, G. Li, and J. Liu, "Reliability analysis of an autonomous underwater vehicle using fault tree," in *Proceedings of the 2013*

IEEE International Conference on Information and Automation, ICIA 2013, pp. 1165–1170, China, August 2013.

[16] A. Toppila and A. Salo, "A computational framework for prioritization of events in fault tree analysis under interval-valued probabilities," *IEEE Transactions on Reliability*, vol. 62, no. 3, pp. 583–595, 2013.

[17] A. Majdara and T. Wakabayashi, "Component-based modeling of systems for automated fault tree generation," *Reliability Engineering & System Safety*, vol. 94, no. 6, pp. 1076–1086, 2009.

[18] A. Lindhe, T. Norberg, and L. Rosén, "Approximate dynamic fault tree calculations for modelling water supply risks," *Reliability Engineering & System Safety*, vol. 106, pp. 61–71, 2012.

[19] D. Marquez, M. Neil, and N. Fenton, "Improved reliability modeling using Bayesian networks and dynamic discretization," *Reliability Engineering & System Safety*, vol. 95, no. 4, pp. 412–425, 2010.

[20] S. J. Bae, T. Yuan, S. Ning, and W. Kuo, "A Bayesian approach to modeling two-phase degradation using change-point regression," *Reliability Engineering & System Safety*, vol. 134, pp. 66–74, 2015.

[21] F. Sun, C. Li, Y. Nie, and F. Duan, "The Method of Fault Diagnosis for Servo System Based on Fuzzy Fault Tree Analysis," in *Proceedings of the 2015 3rd International Conference on Mechanical Engineering and Intelligent Systems*, Yinchuan, China, August 2015.

[22] L. Wang, L. Cui, and M. Yu, "Markov repairable systems with stochastic regimes switching," *Journal of Systems Engineering and Electronics*, vol. 22, no. 5, pp. 773–779, 2011.

[23] F. Chiacchio, D. D'Urso, L. Compagno, M. Pennisi, F. Pappalardo, and G. Manno, "SHyFTA, a Stochastic Hybrid Fault Tree Automaton for the modelling and simulation of dynamic reliability problems," *Expert Systems with Applications*, vol. 47, pp. 42–57, 2016.

[24] Y. Ran, G. Zhang, and L. Zhang, "Quality characteristic association analysis of computer numerical control machine tool based on meta-action assembly unit," *Advances in Mechanical Engineering*, vol. 8, no. 1, 2016.

[25] D. Li, G. Zhang, M. Li, J. Lou, and H. Zhao, "Assembly reliability modeling technology based on meta-action," in *Proceedings of the 13th CIRP Conference on Computer Aided Tolerancing, CAT 2014*, pp. 207–215, China, May 2014.

[26] D. Li, M. Li, G. Zhang, Y. Wang, and Y. Ran, "Mechanism analysis of deviation sourcing and propagation for meta-action assembly unit," *Jixie Gongcheng Xuebao/Journal of Mechanical Engineering*, vol. 51, no. 17, pp. 146–155, 2015.

[27] E. T. Hua, K. Zhou, and Y. L. Fei, "Multi-objective optimization for automotive door parameters based on grey theory," *Computer Integrated Manufacturing Systems*, vol. 18, no. 3, pp. 486–491, 2012.

[28] D. W. Stroock, *An introduction to Markov processes*, vol. 230 of *Graduate Texts in Mathematics*, Springer-Verlag, Berlin, 2005.


Advances in Operations Research
Advances in Decision Sciences
Journal of Applied Mathematics
The Scientific World Journal
Journal of Probability and Statistics
International Journal of Mathematics and Mathematical Sciences
Hindawi
Submit your manuscripts at
www.hindawi.com
Journal of Optimization
International Journal of Engineering Mathematics
International Journal of Analysis
Journal of Complex Analysis
Advances in Numerical Analysis
Mathematical Problems in Engineering
International Journal of Differential Equations
Discrete Dynamics in Nature and Society
International Journal of Stochastic Analysis
Journal of Mathematics
Journal of Function Spaces
Abstract and Applied Analysis
Advances in Mathematical Physics