Hindawi
Mathematical Problems in Engineering
Volume 2021, Article ID 5713902, 5 pages
https://doi.org/10.1155/2021/5713902

Research Article

Computational Method and Simulation of Reliability for Series, Parallel, and *k*-Out-of-*n* Systems with Interval Parameters

Yongfeng Fang,[1,2] **Kong Fah Tee**,[3] **Zhengwei Cheng**,[2] **and Xu Yong**[2]

[1]*School of Physics and Electronic Information Engineering, Ningxia Normal University, Guyuan 756000, China*
[2]*Schoool of Mechanical Engineering, Guizhou University of Science and Engineering, Bijie 551700, China*
[3]*School of Engineering, University of Greenwich, Kent, UK*

Correspondence should be addressed to Yongfeng Fang; fangyf_9707@126.com

Received 17 May 2021; Revised 27 May 2021; Accepted 16 August 2021; Published 15 September 2021

Academic Editor: Chengwei Fei

For series, parallel, and *k*-out-of-*n* voting system reliability calculation methods, the six σ principles have been proposed in this study to derive the interchange relationship between interval parameters and random parameters. The interval reliability index can be expressed in the function of the random reliability index. The interval reliability index can then be transformed into a random reliability index. The computational method of the reliability for series, parallel, and *k*-out-of-*n* voting systems with interval parameters is established. Finally, it has been shown that the proposed method is rational, practical, and applicable with two engineering practical simulations.

1. Introduction

In real-world engineering practice, it is very difficult to collect enough and accurate whole service life data for engineering structures, machinery and systems, etc., and the random reliability methods often fail to meet the actual needs. The literature [1–3] points out that the random reliability methods are often used in reliability assessment, but in practice, there should be other more effective approaches to supplement the deficiencies of random reliability methods. When the random reliability methods are unable to fit the models, the reliability problems should be solved using the interval, fuzzy, or convex set models to describe the uncertainty parameters [4–7]. Structural nonprobabilistic reliability models based on the interval theory have been proposed, and the structural nonprobabilistic reliability indices have been analyzed under interval loads [8].

In most real-life engineering problems, structures and machinery are not isolated but exist in the form of a system. The main common systems are series, parallel, and k/n system (SPKS). In the paper by Jiang et al. [9], the SPKS are introduced, and the reliability computational methods are presented, respectively. The random reliability method and interval reliability method are compared [10]. It is believed that the two reliability methods have their advantages and can complement each other in reliability calculation. The conversion of interval and random reliability methods has been studied [11, 12]. Different measure spaces are transformed into a unified random space. The structural reliability is computed by using the random reliability theory, and the accuracy of the calculation can be improved [13].

In the paper by Fang et al. [14, 15], the dynamic reliability of the repairable k/n vote is studied, and its reliability computational model is proposed. The reliability and maintenance of SPKS are also studied, and the optimal maintenance plan with repair time is proposed [16]. Load and strength with interval parameters will normally be encountered during the service period of engineering systems. The random reliability calculation method has also not been applied to SPKS reasonably. At present, there are limited studies on this topic.

Based on the above literature review, the computational method for interval reliability of SPKS will be studied in this paper. The interval parameters will first be transformed into random parameters; then, the random reliability of each link within the SPKS will be obtained, and finally, the random

reliability of the whole SPKS will be computed. Two numerical examples are used to illustrate the proposed method for practicability and effectiveness.

2. Series, Parallel, and k/n Systems with Random Parameters

A system is denoted as S_s. There are n links within the system, and the ith link (i from 1 to n) is subjected to the load of which the mean is denoted as μ_{Li} and the standard deviation is σ_{Li}. The mean of the strength for the ith link (i from 1 to n) is denoted as μ_{qi}, and the standard deviation is σ_{qi}.

The reliability index of the ith link is denoted as β_i, and the reliability (probability of failure) is denoted as P_i. Based on the configuration of the system, the reliability of the series system (P_{ss}), parallel system (P_{ps}), and k/n system (P_{ks}) can be calculated as follows:

$$P_{\mathrm{ss}} = \prod_{i=1}^{n} P_i, \tag{1}$$

$$P_{\mathrm{ps}} = 1 - \prod_{i=1}^{n} (1 - P_i), \tag{2}$$

$$P_{\mathrm{ks}} = \sum_{m=k}^{n} C_n^m P_i^m (1 - P_i)^{n-m}. \tag{3}$$

3. Reliability Computation of Series, Parallel, and k/n Systems with Interval Parameters

3.1. Basic Theory. A system with interval parameters is denoted as S_I. There are m links within the system, and the ith link (i is from 1 to m) is subjected to the load which contains interval parameters too. The interval number is given as $x_{Li}^I = [\underline{x_{Li}}, \overline{x_{Li}}]$, where $\underline{x_{Li}}, \overline{x}_{Li} \in R$ and $\underline{x_{Li}} \le \overline{x}_{Li}$. $\underline{x_{Li}}$ is the lower bound of the interval and $\overline{x}_{Li}$ is the upper bound of the interval.

Its interval mean and deviation of the load can be calculated as follows:

$$x_{Li}^c = \frac{\left(\underline{x_{Li}} + \overline{x}_{Li}\right)}{2}, \tag{4}$$

$$x_{Li}^r = \frac{\left(\overline{x}_{Li} - \underline{x_{Li}}\right)}{2}. \tag{5}$$

Similarly, the strength of the -th link (i is from 1 to m) with interval parameters is given as $x_{qi}^I = [\underline{x_{qi}}, \overline{x_{qi}}]$, where $\underline{x_{qi}}, \overline{x}_{qi} \in R$, and $\underline{x_{qi}} \le \overline{x}_{qi}$. Its interval mean and deviation of the strength can be calculated as follows:

$$x_{qi}^c = \frac{\left(\underline{x_{qi}} + \overline{x}_{qi}\right)}{2}, \tag{6}$$

$$x_{qi}^r = \frac{\left(\overline{x}_{qi} - \underline{x_{qi}}\right)}{2}. \tag{7}$$

Based on the load and strength of the ith link with interval parameters, its reliability computational equation is shown as follows:

$$\eta = \begin{cases} \dfrac{x_{qi}^c - x_{Li}^c}{x_{qi}^r + x_{Li}^r}, & x_{qi}^c > x_{Li}^c, \\ 0, & \text{others}. \end{cases} \tag{8}$$

If $\eta_i > 1$, the ith link in the system is reliable. However, if $\eta_i < -1$, the ith link in the system is not reliable. If $-1 \le \eta_i \le 1$, the higher the value of η, the more reliable the link will achieve.

3.2. Proposed Reliability Computational Approach. For SPKS with random and interval parameters, the following relationship for the ith link subjected to the load can be established using the 6 σ rule:

$$\underline{x_{Li}} = \mu_{Li} - 6\sigma_{Li}, \tag{9}$$

$$\overline{x}_{Li} = \mu_{Li} + 6\sigma_{Li}. \tag{10}$$

Based on equations (4) and (5), equations (9) and (10) can be rearranged as follows:

$$x_{Li}^c = \mu_{Li} = \frac{\left(\underline{x_{Li}} + \overline{x}_{Li}\right)}{2}, \tag{11}$$

$$\sigma_{Li} = \frac{x_{Li}^c}{6} = \frac{\overline{x}_{Li} - \underline{x_{Li}}}{12}. \tag{12}$$

The relationship between interval deviation of the load and standard deviation of THE random load parameter can be obtained from equation (12):

$$x_{Li}^r = 6\sigma_{Li}. \tag{13}$$

Similarly, the same relationship can be established using the 6 σ rule for the strength of the ith link with interval and random parameters:

$$x_{qi}^c = \mu_{qi}, \tag{14}$$

$$x_{qi}^r = 6\sigma_{qi}. \tag{15}$$

Then, based on the derived equations (13) and (15), the relationship between the interval reliability index and random reliability index of the ith link within the SPKS can be established by using the first-order second moment (FOSM) method as follows:

$$\eta_i = \frac{\mu_{qi}^c - \mu_{Li}^c}{6\left(\sigma_{qi}^r + \sigma_{Li}^r\right)} \ge \frac{1}{6\sqrt{2}} \frac{\mu_{qi}^c - \mu_{Li}^c}{\sqrt{\left(\sigma_{qi}^r\right)^2 + \left(\sigma_{Li}^r\right)^2}} = \frac{1}{6\sqrt{2}}\beta_i, \tag{16}$$

$$6\sqrt{2}\eta_i \ge \beta_i, \tag{17}$$

Table 1: Parameters of the 4 links of the mechanical system.

Link	$\underline{x}_{Li}$ (MPa)	$\overline{x}_{Li}$ (MPa)	x_{qi} (MPa)	$\overline{x}_{qi}$ (MPa)
1	30	35	45	65
2	10	45	40	70
3	0	45	40	70
4	30	45	45	65

Table 2: Reliability of the 4 links of the mechanical system.

Link	1	2	3	4
Reliability P_{Ii}	1	1	0.99999	1

Table 3: Reliability of the series, parallel, and k/n systems.

System	Series system	Parallel system	3/4 system
Reliability P_I	0.99999	1	0.99999

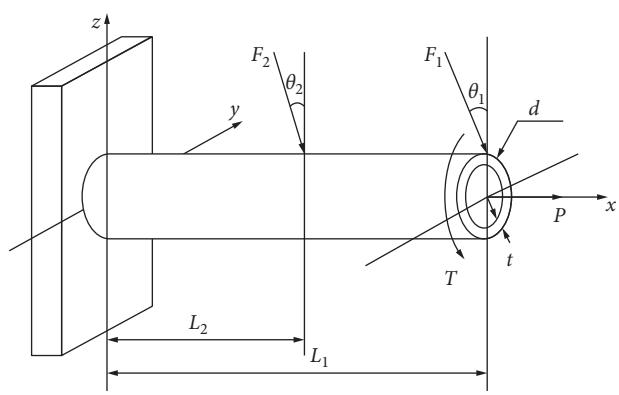

Figure 1: Hollow cylindrical cantilever beam.

Table 4: Parameters of the hollow cylindrical cantilever beam.

Variable	Distribution	Parameter 1	Parameter 2
t (mm)	Normal	5	0.1
d (mm)	Normal	42	0.5
L_2 (mm)	Uniform	59.75	60.25
F_1 (N)	Gumbel	3000	300
F_2 (N)	Gumbel	3000	300
P (N)	Normal	12000	1200
T (Nm)	Normal	90	9
L_1 (mm)	Interval	119.75	120.25
Θ_1 (°)	Interval	0	10
Θ_2 (°)	Interval	5	15
U (MPa)	Normal	300	30
S (MPa)	Normal	200	20
Θ (°)	Interval	0	1.9
τ (MPa)	Normal	100	10
w (mm)	Interval	0.10	0.18

Table 5: Reliability-based on strength, stiffness, shear, torsion, and deflection of the beam.

	Strength	Stiffness	Shear	Torsional angle	Deflection
Reliability	0.99519	0.99999	0.99999	0.99993	0.99891
MC	0.99518	0.99999	0.99999	0.99994	0.99891

Table 6: Reliability of three different systems of the beam.

System type	Series system	Parallel system	3/5 system
Reliability	1	0.99401	0.99907

$$\eta_i = \frac{\mu_{qi}^c - \mu_{Li}^c}{6\left(\sigma_{qi}^r + \sigma_{Li}^r\right)} \le \frac{1}{6}\frac{\mu_{qi}^c - \mu_{Li}^c}{\sqrt{\left(\sigma_{qi}^r\right)^2 + \left(\sigma_{Li}^r\right)^2}} = \frac{1}{6}\beta_i, \quad (18)$$

$$6\eta_i \le \beta_i, \quad (19)$$

$$0.1667\beta_i \le \eta_i \le 0.1178\beta_i. \quad (20)$$

For the sake of conservatism, the interval reliability index can be reduced to

$$\eta_i = 0.1667\beta_i. \quad (21)$$

Equation (21) shows that the interval reliability index corresponds to the random reliability index of the ith link. This index is conservative which is useful in engineering practice. In addition, equation (19) can explain why the system is safe when $\eta_i > 1$, why the system is a failure when $\eta_i < -1$, why the system is more reliable when η is larger, and why the system may be safe or fail when $-1 \le \eta_i \le 1$. It can also be used to determine the degree to which the system may be safe.

The reliability (probability of failure) P_{Ii} of the ith link is calculated using the reliability index as follows:

$$P_{\mathrm{Ii}} = \Phi\left(\beta_i\right), \quad (22)$$

where Φ is the standard normal distribution.

Based on equations (1)–(3), the reliability (probability of failure) of SPKS with interval parameters can be obtained once the reliability P_{Ii} of the ith link has been calculated from equation (22). Based on the configuration of the system, the reliability of the series system (P_{sI}), parallel system (P_{pI}), and k/n system (P_{kI}) with interval parameters can be calculated as follows:

$$P_{\mathrm{sI}} = \prod_{i=1}^{n} P_{\mathrm{Ii}}, \quad (23)$$

$$P_{\mathrm{pI}} = 1 - \prod_{i=1}^{n} \left(1 - P_{\mathrm{Ii}}\right), \quad (24)$$

$$P_{\mathrm{kI}} = \sum_{m=k}^{n} C_n^m P_{\mathrm{Ii}}^m \left(1 - P_{\mathrm{Ii}}\right)^{n-m}. \quad (25)$$

4. Numerical Example

4.1. Example 1. A mechanical system consists of four links. The parameters of load and strength of these four links are interval parameters, and the values are shown in Table 1. After applying the proposed approach, the reliability of each link is shown in Table 2. The reliability of the mechanical system, when the system has been designed as series, parallel, and 3/4 systems, is shown in Table 3.

It can be seen from Table 3 that the reliability of the series system is the lowest with 0.999999, and the reliability of the parallel system is the highest with the value of 1. This result is consistent with the system reliability obtained based on the random parameters.

4.2. Example 2. A hollow cylindrical cantilever beam is shown in Figure 1 [11]. Its parameters are shown in Table 4. S is the allowable yield strength, U is the allowable strength, θ is the allowable torsional angle, τ is the allowable shear stress, and w is the allowable deflection of the hollow cylindrical cantilever beam. Parameters 1 and 2, as shown in Table 4, are the positional and scale parameters for the Gumbel distribution, respectively. For the normal distribution, parameters 1 and 2 are the mean and standard deviation, respectively. For the uniform distribution and interval distribution, parameters 1 and 2 are the lower and upper bounds, respectively.

Five criteria are considered in this example, which are strength, stiffness, shear force, torsional angle, and deflection. The reliability of the cantilever beam based on these criteria in this paper is shown in Table 5. If only considering one of the five failure criteria, it is a parallel system. However, by considering all these five criteria, it is a series system. If three of them do not fail, then the cantilever beam does not fail. Obviously, the cantilever beam is a 3/5 voting system. The reliabilities of these systems are shown in Table 6. Each criterion has been calculated by the Monte Carlo (MC) method with 10^6 samples, respectively, and the reliability results are shown in Table 6.

The reliability of the hollow cylindrical cantilever beam based on yield strength has been calculated using the proposed approach and the value is 0.99519. This example has also been calculated in [14] and the result is identical. This validates the proposed approach in reliability estimation. In

addition, the strength, stiffness, deformation, and other factors should be considered comprehensively during its service period. If all factors will not fail, then the cantilever beam can be considered to be reliable. It is reasonable that the hollow cylindrical cantilever beam should be considered as a parallel system, and its reliability is 0.99401.

5. Conclusion

The reliability calculation method for interval parameters within SPKS has been proposed. The interchange relationship of the interval parameters and random parameters has been derived by using the 6σ principle. The relationship between the interval reliability index and the random reliability index has been established. The interval reliability index of individual link within SPKS can be transformed into the random reliability index. Once the reliability of the individual link within the system has been obtained, the reliability of the whole SPKS can be calculated. It has been verified that the proposed method is reasonable, practical, and applicable with two numerical examples.

Data Availability

The data used to support the findings of this study are available from the corresponding author upon request.

Conflicts of Interest

The authors declare that they have no conflicts of interest.

Acknowledgments

This work was supported in part by the Foundation Science Technology of Guizhou, China (Qian Kehe [2018]1055, Qian Jiao Keyan [2018]400, [2017]304, and [2020]157, and Bi Kelianhe G(2019)7).

References

[1] J. Shortridge, T. Aven, and S. Guikema, "Risk assessment under deep uncertainty: a methodological comparison," *Reliability Engineering & System Safety*, vol. 159, no. 3, pp. 12–23, 2017.

[2] T. Khaniyev, M. B. Baskir, F. Gokpinar, and F. Mirzayev, "Statistical distributions and reliability functions with type-2 fuzzy parameters," *Ekspolatacja i Niezawodnosc-Maintenance and Reliability*, vol. 21, no. 2, pp. 268–274, 2019.

[3] D. Meng, T. Xie, P. Wu, C. He, Z. Hu, and Z. Lv, "An uncertainty-based design optimization strategy with random and interval variables for multidisciplinary engineering systems," *Structure*, vol. 32, no. 3, pp. 997–1004, 2021.

[4] Z. Qiu, *Convex Method Based on Non-Probabilistic Set-Theory and its Applications*, National Defense Industry Press, Beijing, China, 2005.

[5] Y. Fang, K. F. Tee, and J. Chen, "Structural dynamic reliability evaluation under consideration of fuzzy strength and fuzzy stress," *Journal of Vibration Engineering and Technologies*, vol. 4, no. 1, pp. 53–58, 2016.

[6] K. F. Tee, A. U. Ebenuwa, and Y. Zhang, "Fuzzy-based robustness assessment of buried pipelines," *Journal of Pipeline Systems Engineering and Practice, ASCE*, vol. 9, no. 1, 2018.

[7] D. Meng, Z. Hu, P. Wu et al., "Reliability-based optimisation for offshore structures using saddlepoint approximation," *Proceedings of the Institution of Civil Engineers - Maritime Engineering*, vol. 173, no. 2, pp. 33–42, 2020.

[8] Z. Qiu and J. Wang, "The interval estimation of reliability for probabilistic and non-probabilistic hybrid structural system," *Engineering Failure Analysis*, vol. 17, no. 5, pp. 1142–1154, 2010.

[9] C. Jiang, G. Y. Lu, X. Han, and L. X. Liu, "A new reliability analysis method for uncertain structures with random and interval variables," *International Journal of Mechanics and Materials in Design*, vol. 8, no. 2, pp. 169–182, 2012.

[10] Y. Fang, W. Tao, and Y. Gao, "Comparison between the structural interval reliability and probabilistic reliability under the big data," *Chinese Quarterly of Mechanics*, vol. 41, no. 3, pp. 582–589, 2020.

[11] X. Yang, Y. Liu, Yi Gao, Y. Zhang, and Z. Gao, "An active learning kriging model for hybrid reliability analysis with both random and interval variables," *Structural and Multidisciplinary Optimization*, vol. 51, no. 11, pp. 1003–1016, 2015.

[12] Y. Fang, J. Xiong, and K. F. Tee, "An iterative hybrid random-interval structural reliability analysis," *Earthquakes and Structures*, vol. 7, no. 6, pp. 1061–1070, 2014.

[13] D. Meng, T. Xie, P. Wu, S.-P. Zhu, Z. Hu, and Y. Li, "Uncertainty-based design and optimization using first order saddlepoint approximation method for multidisciplinary engineering systems," *ASCE-ASME Journal of Risk and Uncertainty in Engineering Systems, Part A: Civil Engineering*, vol. 6, no. 3, pp. 1061–1076, 2020.

[14] K. Davies and A. Dembińska, "On the number of failed components in a k-out-of-n system upon system failure when the lifetimes are discretely distributed," *Reliability Engineering & System Safety*, vol. 188, no. 8, pp. 47–61, 2019.

[15] Y. Fang, W. Tao, and K. F. Tee, "Repairable k-out-n system work model analysis from time response," *Computers and Concrete*, vol. 12, no. 6, pp. 775–783, 2013.

[16] R. Faddoul, W. Raphael, and A. Chateauneuf, "Maintenance optimization of series systems subject to reliability constraints," *Reliability Engineering & System Safety*, vol. 180, no. 11, pp. 179–188, 2018.