Hindawi
Mathematical Problems in Engineering
Volume 2022, Article ID 2882456, 12 pages
https://doi.org/10.1155/2022/2882456

Research Article

Application of Wavelet Packet and Fuzzy Algorithm in Power System Short Circuit Fault Classification

Guangping Qiu

Zhujiang College of South China Agricultural University, Guangzhou, Guangdong, 510900, China

Correspondence should be addressed to Guangping Qiu; s01284540@acad.tri-c.edu

Received 29 March 2022; Revised 2 June 2022; Accepted 8 June 2022; Published 29 June 2022

Academic Editor: Ricardo Fabricio Escobar Jiménez

Short-circuit fault, also known as a lateral fault, is one of the common types of faults in power transmission lines. This paper proposes an accurate method for identifying short-circuit fault types for power transmission line systems. According to the three-phase A, B, and C values, short-circuit faults can be subdivided into ten classes. An MDL power system with controllable short-circuit fault types is designed and tested. The method of using wavelet packet to analyze short-circuit fault waveforms and using the fuzzy controller to analyze eigenvectors is also proposed. Wavelet packet analysis makes up for the defect that wavelet transform usually only decomposes low frequencies and retains high frequency. Therefore, more accurate frequency band information and eigenvectors are obtained through wavelet packet transform, and then, the fuzzy controller is used to identify the eigenvectors, which can effectively detect and discriminate short-circuit fault types. Accurate identification of short-circuit fault types can improve transmission lines' overall operational efficiency and promote the power system's development.

1. Introduction

With the growth of population and the development of industry, the demand for electricity in today's society has increased sharply, and the scale of the power system has become larger and larger. The power system transmission networks should operate efficiently and safely and reduce economic losses, but power system performance is often affected by transmission line failures. The power system consists of five parts: generation, transformation, transmission, distribution, and consumption. The power transmission line is an essential link between power plants and electricity users [1, 2]. As the overhead power transmission lines are exposed for a long time, resulting in equipment aging, equipment insulation failure, the overhead line arc sag is too large to cause a short-circuit, and failures such as downed poles and broken lines caused by lousy weather often occur. Frequent failures can suddenly cause voltage drops that interrupt power interference or transmission interruptions, thereby reducing the stability and reliability of the power system. The main task of restoring a stable power supply is to quickly detect and remove the fault to prevent further spot expansion [3].

Fault analysis is divided into three sections: fault classification, fault detection, and fault localization. Fault classification is the most crucial study field [4]. Short-circuit fault is the primary transmission line fault, which is the most harmful to the power system. It will shorten the life of power equipment, increase power grid losses, and generate electromagnetic interference [5]. Short-circuit faults can be divided into four categories: single-phase grounding short-circuit faults, two-phase short-circuit faults, two-phase grounding short-circuit faults, and three-phase short-circuit faults [6]. The most dangerous is a three-phase short-circuit, whereas the most common is a single-phase grounding short-circuit [7].

Single-phase grounding means that a phase line in a three-phase system is in an equipotential state with the ground. The potential of the phase line is equal to the possibility of the ground, and both are zero.

Two-phase short-circuit means that the two phases in the three-phase system are short-circuited, and the voltage of the two faulted phases is equal.

Two-phase short-circuit grounding refers to that when there are two-phase grounding short-circuits in the three-phase system, the voltage of the faulted two phases is zero.

Three-phase short-circuit means that in a short circuit between three-phase conductors, the sum of the three-phase voltages is zero, and the sum of the currents is zero.

The following ten fault types can be subdivided into four kinds of short-circuit faults, as indicated in Table 1.

The current distance protection method used in the power grid can hardly meet the dynamic working process of the power system, such as power and load fluctuations, especially some high-impedance short-circuit faults, which cannot be identified. Therefore, scholars have introduced intelligent algorithms into power system fault analysis and relay protection and achieved apparent results. The literature [8] proposed using DWT (Discrete Wavelet Transform) in fault analysis and introduced the concepts of wavelet energy entropy, time entropy, and greatest entropy. In the paper, the DB-4 mother wavelet is used for the 3-layer decomposition of three-phase currents, and then the information entropy is classified into faults by LDA (Linear Discriminant Analysis). The phase current is used for fault detection, and the zero-sequence current component is used to distinguish whether the fault is a grounding short-circuit. However, the classification of nonlinear high-impedance faults and CT (Current Transformer) saturation is poor. Reference [9] presented the method of SVM (Support Vector Machines) and WT (Wavelet Transform) to classify fault types and predict the fault location. Wavelet entropy is introduced into WT to reduce the number of eigenvectors firstly, and then the terminal current signal is classified into faults by a multilevel SVM algorithm. This method can improve the classification accuracy, but the fault location error is slightly larger. References [10–13] used wavelet analysis combined with ANN (Artificial Neural Network) to process. First, the fault signal is decomposed by wavelet transform, and then the eigenvalues are extracted and sent to the neural network for training and fault detection. Based on the current waveform analysis and wavelet domain analysis, the fault state and abnormal states such as voltage sag and oscillation can be distinguished. However, if the impedance, phase, or other parameters of the system line are not in the current ANN learning model, fault misclassification will occur. The literature [14] used Fourier transform to calculate the voltage of the transmission line, and then the obtained eigenvalues are utilized by the trained GA-GNN (Genetic Algorithm). This method focused on the training and identifying faults in multiple impedances and initial phases of the bilateral power grid by GA. However, the maximum error percentage is also large, about 7%. Reference [15] verified the feasibility of AIA (Artificial Immune Algorithm) in fault classification through simulation in IEEE 34-bus test system; but different detectors need to be trained; otherwise, the AIA immune system will produce different Fault Sensitivities. Reference [16], the S-transform is used to extract the eigenvalues. The DT (Decision Tree) is used to classify faults initially; the final classification is processed by setting the fuzzy membership functions and fuzzy rules of the fuzzy algorithm. Thanks to the multi-resolution analysis of WT, wavelet analysis can obtain more accurate results and faster response time. WT is widely used in power system short-circuit fault diagnosis. However, WT has its limitations: it only further decomposes the low-frequency part of the signal but ignores the high-frequency part (the detailed part) of the signal. This results in poor time resolution in the low-frequency band and poor frequency resolution in the high-frequency band. Therefore, signals with a large amount of detailed information such as small edges or textures cannot be handled well.

Table 1: Three-phase short-circuit fault types.

Fault type		A	B	C
Single-phase grounding fault	A-G	0	Normal	Normal
	B-G	Normal	0	Normal
	C-G	Normal	Normal	0
Two-phase short-circuit fault	A-B	=	=	Normal
	B–C	Normal	=	=
	C-A	=	Normal	=
Two-phase grounding fault	A-B-G	0	0	Normal
	B–C-G	Normal	0	0
	C-A-G	0	Normal	0
Three-phase short-circuit fault	A-B-C	0	0	0

In this paper, Wavelet Packet analysis is introduced to further decompose the high-frequency parts that are not subdivided in WT. The corresponding frequency band can be selected to match the spectrum of the signal adaptively and have a higher time-frequency resolution. Because the data obtained from wavelet packets is fundamentally fuzzy, fuzzy analysis is the best option [17]. Unlike neural networks, which require stringent data training, fuzzy analysis only needs to set some simple logic rules to obtain results, and whether the neural network algorithm can converge is also a big problem. This method obtains good classification results by modeling power system faults and using wavelet packet analysis combined with a fuzzy algorithm to process ten short-circuit faults in four primary categories.

2. Wavelet Packet Analysis

With the deepening research on the power system, WT has been applied to relay protection, transient analysis, power quality detection, and fault classification. Unlike the traditional Fourier transform, WT provides both time domain and frequency domain signals. Its multi-resolution feature is suitable for analyzing transient signals containing both frequency conversion and low-frequency components.

The WT decomposes the original signal into two parts by a digital filtering technique: approximation data A with low-frequency coefficient and detail data D with high-frequency coefficient. However, the WT only continues to subdivide the low-frequency part, which can be realized by the continuous/discrete wavelet transform formula [18, 19].

Continuous wavelet transform is as follows:

$$\mathrm{CWT}(a,b) = \frac{1}{\sqrt{a}} \int_{-\infty}^{\infty} x(t)\psi\left(\frac{t-b}{a}\right)dt. \quad (1)$$

Discrete wavelet transform is as follows:

$$\mathrm{DWT}(m,k) = \frac{1}{\sqrt{a_0^m}} \sum_n^N x(n)\psi\left(\frac{k - nb_0a_0^m}{a_0^m}\right) b = nb_0a_0^m, \quad (2)$$

where $x(t)$ denotes the original signal; the $\psi(t)$ represents the mother wavelet function, n denotes the discrete-time; a denotes the scaling factor, which is used to scale the mother wavelet function; b denotes the translation factor, that is used to determine the temporal location of $x(t)$; and a_0, b_0 are the initial constants. When a becomes small, the observed range of $x(t)$ becomes narrower. But for $x(\omega)$, the practical content in the frequency domain becomes more expansive, and the center frequency of the observation shifts toward higher frequencies. Conversely, as a becomes more extensive, the time domain range gets more expansive, the frequency domain range becomes narrower, and the observed central frequency shifts toward lower frequencies [15, 20].

The wavelet transform cannot continue to decompose the high-frequency part (the detail part), which makes the frequency resolution of the high-frequency band poor. It cannot represent the detailed information well [21]. However, when a short-circuit fault occurs in the power system, a large amount of detailed information will be present, so the wavelet packet is used to analyze the short-circuit fault in this paper. The wavelet packet decomposes both the low-frequency and high-frequency parts, which can reduce information redundancy and omission and has a good time-frequency localization decomposition ability. The 3-layer decomposition process is demonstrated in Figure 1.

In Figure 1, the low-pass and high-pass filters are used to generate wavelet packets for the next layer, with the amount of 2^k, and k being the layer number of decomposition. Since the signal will be down-sampled by a factor of 2 before passing through the filter at the next level, thus enhancing the frequency resolution. Furthermore, the two wavelet packets obtained after each decomposition only contain half of the input data; no information is lost. The signal comprises varied energies in different frequency bands, and the fault information can be represented using the energy as an eigenvector.

The energy of each frequency band in the wavelet packet decomposition tree can be described as

$$E_i = \sum_{j=1}^{n} |d_n|^2. \quad (3)$$

Here, i is the number of decomposition layers, and j is the number of eigenvectors. Taking the 3-layer decomposition as an example, the eigenvector is constructed as $X' = [E_1, E_2, E_3, E_4, E_5, E_6, E_7, E_8]$. The following equation can calculate the total energy of the signal.

$$E = \sqrt{\sum_{i=1}^{8} |E_i|^2}. \quad (4)$$

The normalized energy eigenvector can be obtained as

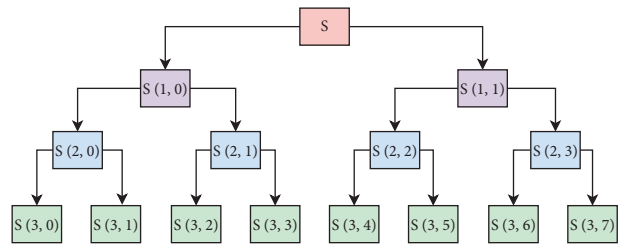

Figure 1: 3-layer wavelet packet decomposition.

$$X = \left[\frac{E_1}{E}, \frac{E_2}{E}, \frac{E_3}{E}, \frac{E_4}{E}, \frac{E_5}{E}, \frac{E_6}{E}, \frac{E_7}{E}, \frac{E_8}{E}\right]. \quad (5)$$

The final eigenvector is used as the input vector for the subsequent fuzzy algorithm control.

3. Fuzzy Algorithm

3.1. Principles of Fuzzy Logic. In addition to true and false binary logic, there are numerous examples where the boundaries cannot be determined, such as "How old is defined as a young person?" "How tall is a tall person? " "How smart is defined as a smart man?" All of these cases are fuzzy. Fuzzy set theory, fuzzy logic, fuzzy reasoning, and fuzzy control were founded by L.A.Zadeh as early as 1965. The basic concept of fuzzy logic is to mimic the human brain's uncertain conceptual judgment and reasoning. The basic idea of fuzzy logic is to imitate the human brain's uncertainty concept, judgment, and reasoning thinking mode. For the description system with an unknown or uncertain model, as well as the control objects with strong nonlinearity and large lag, fuzzy sets, and fuzzy rules are used to reason, express the transitional boundary or qualitative knowledge experience, simulate the human brain mode, and implement fuzzy comprehensive judgment [16, 22, 23]. Fuzzy logic enables artificial intelligence such as computers to think about and reason about fuzzy concepts like "far," "near," "fast," "slow," and other difficulties involving fuzzy ideas in a similar way to human thinking.

3.2. Fuzzy Sets. In formal logic events, such as Boolean logic, the judgment result of any element is yes and no, such as 0 for false and 1 for true. However, in fuzzy logic, the above two results are extended to the concept of fuzzy set, which is defined as

$$A = \{(x, \mu_A(x)) | x \in X\}, \quad (6)$$

where A is the fuzzy set of X and $\mu_A(x)$ is the membership function of A. The range of $\mu_A(x)$ is 0 to 1, corresponding to the degree that x belongs to A, "0" indicates the minimum degree of x belonging to A, and "1" indicates the maximum degree of x belonging to A. A fuzzy set is totally characterized by a membership function (MF).

3.3. Membership Function. In fuzzy logic, the description of a certain situation has no strict boundaries but is measured by the degree of membership. The membership function is a quantitative description of fuzzy elements in fuzzy sets.

Therefore, how to choose the membership function correctly is the key point of using fuzzy theory. Common membership functions include: Gaussian functions (*gaussmf*), Triangular functions (*trimf*), and Trapezoidal functions (*trapmf*). The Triangular membership function or Gaussian membership function is generally used. The Gaussian membership function provides a smooth and even transition, whereas the triangular membership function formula is simple and easy to calculate [24]. In this paper, the triangular function is used to represent the fuzzy input variables of fault classification. The function of triangular membership is written as

$$f(x,a,b,c) = \begin{cases} 0, & x \le a, x \ge c, \\ \dfrac{x-a}{b-a}, & a \le x \le b, \\ \dfrac{c-x}{c-b}, & b \le x \le c, \end{cases} \tag{7}$$

where a and c determine the "legs" of the triangle and b determine the "peaks" of the triangle.

3.4. Fuzzy Rules and Defuzzification. Therefore, it is necessary to define a rule for membership, and the result of this rule should be "true to some extent, and false to a certain extent," and this rule is known as the fuzzy rule. A set of fuzzy logic reasoning systems is composed of many fuzzy rules.

After the input values are transformed into the membership function of each fuzzy set, several undefined values are obtained by fuzzy rules. The obtained undefined values need to be defuzzified so that the obtained undefined values are converted to a clear control signal. Defuzzification is an essential step in the whole fuzzy control system. The commonly used defuzzification methods are MOM (maximum dependency averaging), CENTROID (area center of gravity method), BISECTOR (area equipartition), SOM (maximum subordinate degree subtraction), and LOM (maximum subordinate degree decomposition). The centroid method is the most accurate and the most complex method, which is based on the principle of averaging the different expected values and calculating the sum of the contributions of each sample point to the overall membership function. In the centroid method, the greater the density of the sample taken, the greater the accuracy. The simulation system adopts the centroid method for defuzzification.

The basic fuzzy control system includes three main parts: input fuzzification, fuzzy reasoning, and defuzzification. The working principle can be shown in Figure 2.

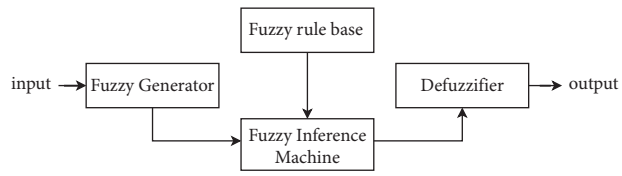

Figure 2: Fuzzy control system.

4. Design for Simulation

4.1. Simulink System Modeling. To study the analysis of power system short-circuit fault types by wavelet packet and fuzzy logic control system proposed in this paper, Synchronous Generator, Power Transformers, Transmission Lines, Load Modules, Three-Phase Fault, and Powergui modules are used to construct the simulation model. Under the International System of Units, the synchronous generator uses the Simplified Synchronous Machine SI Unit module. A, B, and C are the generator stator output voltage electrical connection terminals, which are connected to the three-phase transformer via the transmission line. Because of its simple model and straightforward machine network interface, the simplified synchronous generator module only calculates the second-order model of the rotor dynamics and is frequently utilized in large-scale power system analysis [25]. Three-phase V–I measurement can measure the voltage values and current values. In this paper, the voltage value is measured for fault identification only.

During the simulation, the parameters such as the fault type of the fault point are set by the three-phase line fault module "Three-Phase Fault."

The Simulink simulation model of the power system fault is shown in Figure 3. Simout module (To Workspace) is added in Simulink to make the wavelet packets obtain a data source. Simout's data is kept in "simout.signals.values," which is made up of A, B, and C phase data, therefore it requires simout.signals.values (N) to call the appropriate column: when N is 1, phase A data is called; when N is 2, phase B data is called; when N is 3, phase C data is called. The four categories of short-circuit fault voltage waveforms obtained are shown in Figure 4.

4.2. Wavelet Packet Analysis. DB wavelet basis is used in this paper. The character of the DB wavelet is an irregular phase change, the shortest wavelet with the same vanishing distance order as the orthogonal wavelet. The frequency resolution characteristics of the DB wavelet are outstanding. The time-frequency analysis of fault data signal by the DB wavelet can make the missed frequency range narrow and can retain the energy values of movements in different frequency bands effectively [26].

To compare the analysis effect of wavelet packet transform and wavelet transform on the high-frequency signal of short-circuit fault, the following two groups of simulation examples are given.

The first group of simulation examples is wavelet packet transform: after obtaining the data of the A-phase grounded short-circuit fault derived from the simulation model, a three-layer wavelet packet decomposition tree and data of node diagram are obtained, as shown in Figure 5.

According to the characteristics of the analyzed signal, the wavelet packet further decomposes the high-frequency part without subdivision and adaptively selects the corresponding frequency band to match the signal spectrum, to

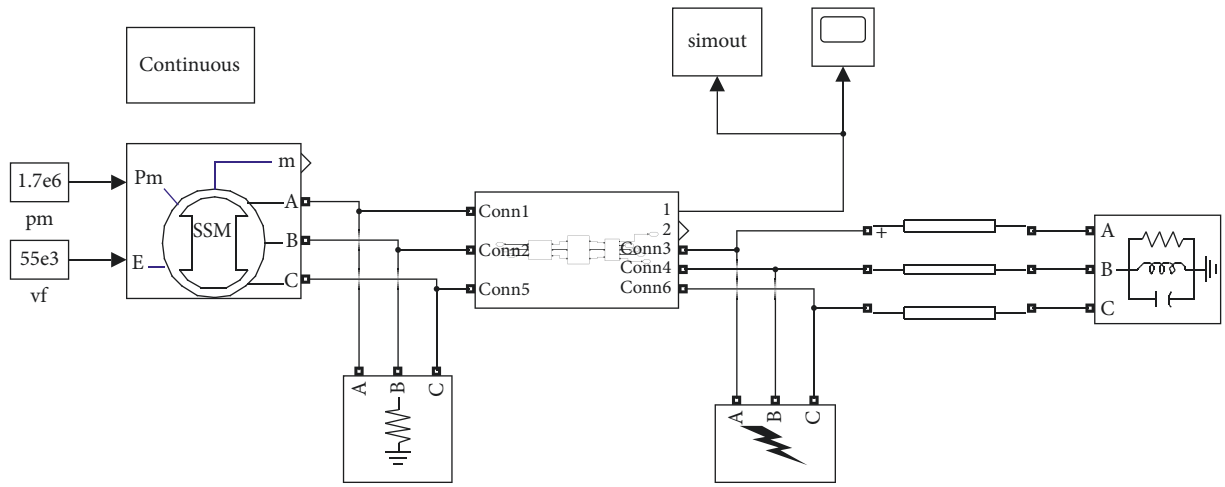

Figure 3: Simulink simulation model for power system faults.

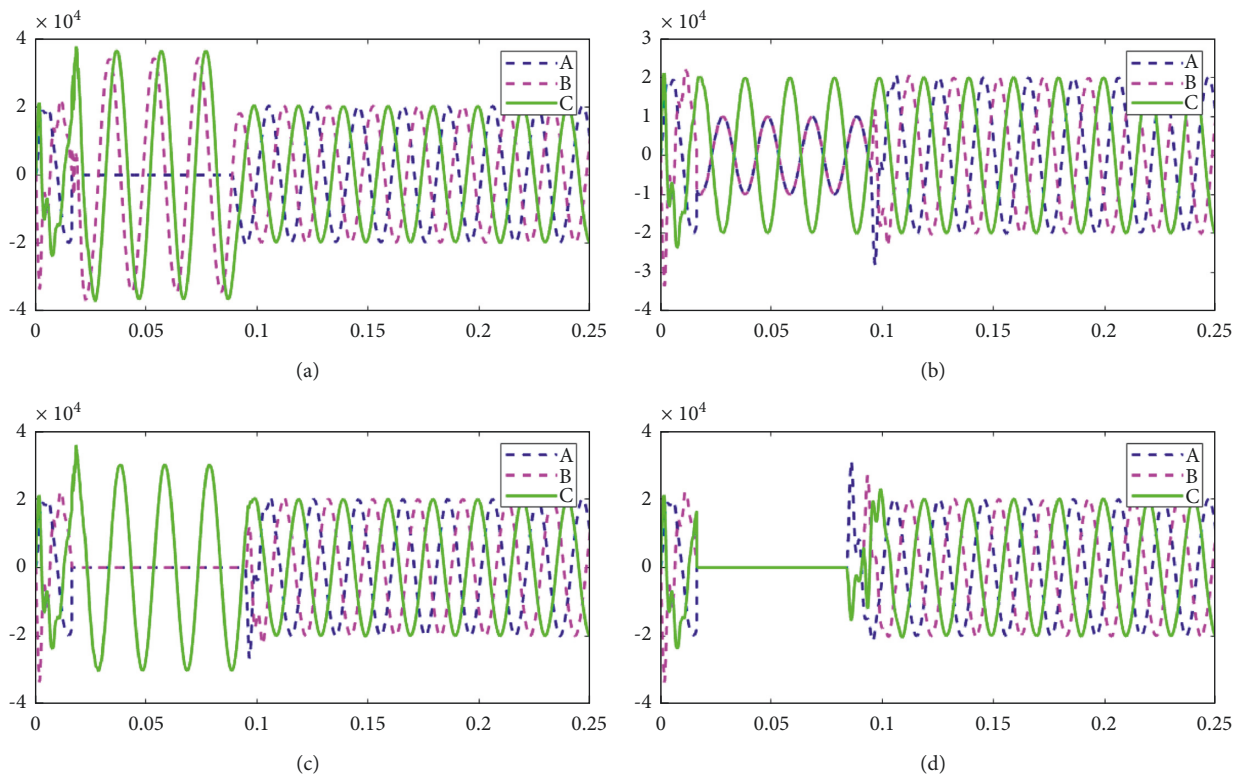

Figure 4: Four types of short-circuit fault voltage waveform. (a) Phase A grounding short-circuit. (b) Phase AB short-circuit. (c) Phase AB grounding short-circuit. (d) Phase ABC short-circuit.

improve the time-frequency resolution. The wavelet packet transform obtains the analysis results within 0.4 seconds. The low-frequency and high-frequency waveforms obtained by the decomposition of the third layer of wavelet packet transform are shown in Figure 6.

The second set of simulation examples is the wavelet transform. The wavelet transform only allows signals with similar frequency and wavelet basis function frequency to pass through. Here, the DB1 wavelet basis function is selected for wavelet transform, and the waveform detection and analysis of the original data of the same group of A-phase ground short-circuit faults are carried out [27]. The signal effect of the high-frequency layer obtained by the three-layer wavelet transform based on the DB1 wavelet basis function is shown in Figure 7.

Compared with the high-frequency effect of the three-layer wavelet packet shown on the right side of Figure 6, the high-frequency part of the wavelet packet transform contains more detailed signals than the high-frequency part of the wavelet transform. The wavelet packet

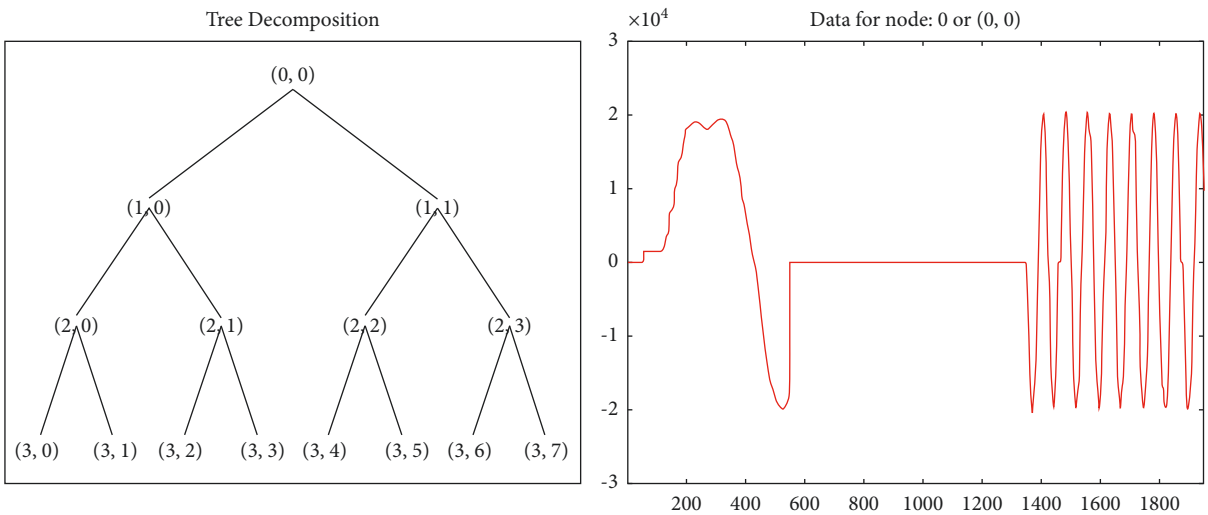

Figure 5: A wavelet packet decomposition tree and data node diagram of phase A grounding short-circuit data.

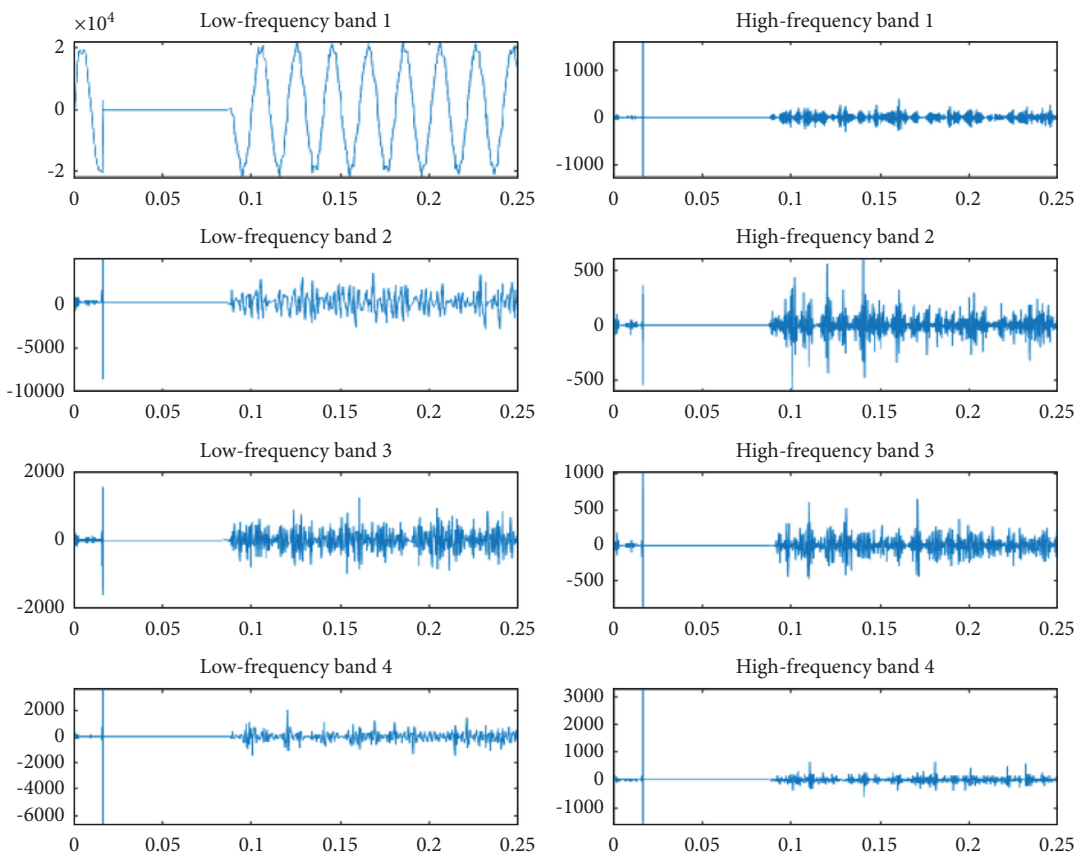

Figure 6: Waveforms of high and low-frequency bands after the third layer of wavelet packet transform decomposition.

decomposition is actually an improvement of the wavelet decomposition, which decomposes the signal's high-frequency components and low-frequency components. Compared with the wavelet transform, it is more precise and comprehensive and can better reflect the full-frequency characteristics of the movement. The feature vector can adaptively select the frequency band and has the attributes of time-frequency localization. The elements correspond to the spectrum to improve the time-frequency resolution of the signal.

Short-circuit faults are instantaneous, so the fault period of this simulation model is set to 0.25 seconds. The wavelet packet transform is used to sample various short-circuit faults of the simulation model. For each group of data from

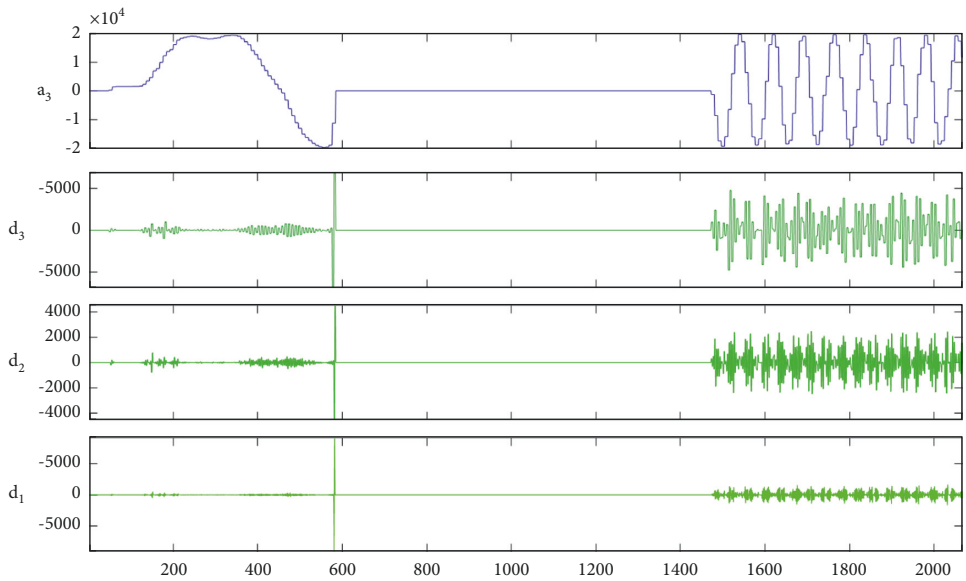

Figure 7: High-frequency waveform of the wavelet transform.

0–0.25 seconds period are sampled 1950 times, through the analysis of the wavelet packet waveform graph, the 600th-800th sampling points in the intercepted data were calculated and analyzed. The data obtained as shown in Table 2:

4.3. Fuzzy Control. The fuzzy controller needs to determine the input, output, membership function, fuzzy rules, and defuzzification method. The fuzzy controller model is shown in Figure 8. The controller is in the form of three inputs and one output. The input variables are the eigenvalues obtained by wavelet packet transform from the values of A, B, and C, and the output variables are the accurate values derived from the fuzzy controller.

The fuzzy set of inputs A, B, and C is {low, medium, and high}, and the fuzzy set of output Fault-type is {single-phase-ground, two-phase, two-phase-ground, three-phase}. The universe is [0, 5], and the quantization level is {0, 0.5, 1, 1.5, 2, 2.5, 3, 3.5, 4, 4.5, 5}. The membership function of the input variable A is shown in Figure 9(a), and the membership function of the output variable Fault-type is shown in Figure 9(b).

By analyzing the voltage value of the three-phase short-circuit fault type in Table 1 and the eigenvalue data obtained by Table 2 wavelet packet analysis, the following rules are obtained [28, 29]:

(1) When one phase in ABC is low, and the values of the remaining two phases are high, it is judged to be single-phase grounding (in Table 1, the value of "low" represents "0," and the value of "high" represents "normal," and the value of "medium" represents " = " the same below);

(2) When the values of ABC are not 0, and two of them have similar data, the data of the third phase is high, it is judged to be a two-phase short circuit.

Table 2: Data sampling.

Short-circuit fault type	A-output	B-output	C-output
AG	0.0000	0.8576	6.4677
BG	4.4352	0.0000	4.7824
CG	4.5897	5.6066	0.0001
AB	1.5825	1.5825	3.1678
AC	1.3326	2.6675	1.3327
BC	2.2888	1.1435	1.1434
ABG	0.0000	0.0000	5.8795
ACG	0.0000	4.1085	0.0001
BCG	3.0958	0.0000	0.0000
ABC	0.0000	0.0000	0.0000

(3) When the two phases of ABC have low data and the third phase is high, it is judged to be a two-phase grounding short circuit.

(4) When the values of ABC are low, it is considered a three-phase short circuit.

According to the above 4 rules, set the compound "and" rule, that is, suppose a_1 holds, and a_2 holds, and,. . ., a_n holds, then c is established, its mathematical expression is [30]

$$\text{IF } a_1 \text{ AND } a_2 \text{ AND } \ldots \text{ AND } a_n \text{ THEN } c. \tag{8}$$

Set the fuzzy rules as follows:

(1) IF A is low AND B is high, AND C is high, THEN Fault-type is a single-phase ground fault

(2) IF A is high AND B is low, AND C is high, THEN Fault-type is a single-phase ground fault

(3) IF A is high AND B is high, AND C is low, THEN Fault-type is a single-phase ground fault

(4) IF A is medium AND B is medium, AND C is high, THEN Fault-type is a two-phase fault

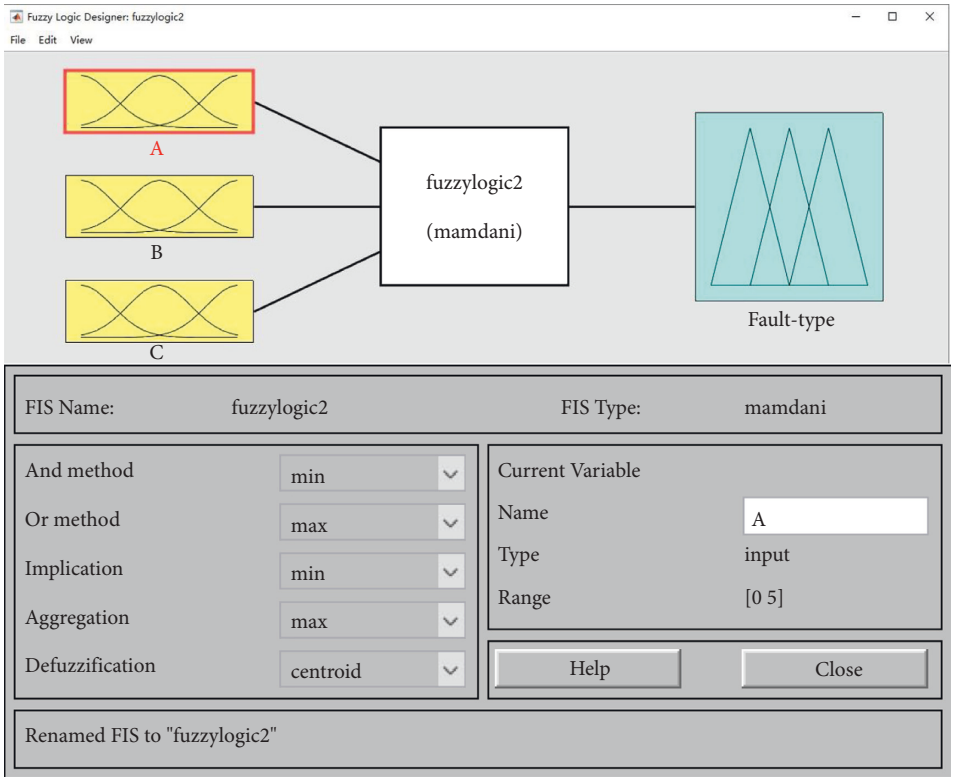

Figure 8: Fuzzy controller design.

(5) IF A is medium AND B is high, AND C is medium, THEN Fault-type is a two-phase fault

(6) IF A is high AND B is medium, AND C is medium, THEN Fault-type is a two-phase fault

(7) IF A is high AND B is low, AND C is low, THEN Fault-type is a two-phase ground fault

(8) IF A is low AND B is high, AND C is low, THEN Fault-type is a two-phase ground fault

(9) IF A is low AND B is low, AND C is high, THEN Fault-type is a two-phase ground fault

(10) IF A is low, AND B is low, AND C is low, THEN Fault-type is a three-phase fault

The fuzzy rules are shown in Figure 10.

Fuzzy logic controller is generated from the membership function and fuzzy rules obtained earlier. The eigenvalues obtained by wavelet packet transform are used as the input variables to establish the fuzzy inference system model. The SIMULINK model of the fuzzy inference system is shown in Figure 11 [31]:

4.4. Discussion

4.4.1. Simulation Results. When the generator and three-phase line fault modules are set in phase modulation operation mode, switch the fault category of the system, and use the sampled wavelet packet eigenvectors as the input of the fuzzy control system. The fuzzy results for each short-circuit category are obtained within 1 second, as shown in Table 3:

The experimental results show the following:

(1) When one of the ABC values is 0 and the rest is "normal," the fuzzy output value is larger than or equal to 2.5, indicating that the type of single-phase grounding fault is determined

(2) When none of the ABC values is 0, and two of the values are approximately equal, the fuzzy output value is 1.8, which is judged as a two-phase short-circuit

(3) The fuzzy output value of 1.5 is found to be a kind of two-phase grounded when two of the ABC values are 0 and the remaining one is normal

(4) When all three ABC values are 0, the fuzzy output value is 0.05, and the three-phase short-circuit type is determined

The experimental results can be summarized: the analysis of high-frequency signals, wavelet packet transform method is superior to wavelet transform; the control effect of fuzzy logic controller depends on the setting of membership function and fuzzy rules. The short-circuit fault can be accurately distinguished by correctly setting the fuzzy controller.

4.4.2. Comparison with Other Technologies. The proposed method has the following advantages over the main methods.

Compared with SVM. SVM is a generalized linear classifier for the binary classification of data based on supervised learning.

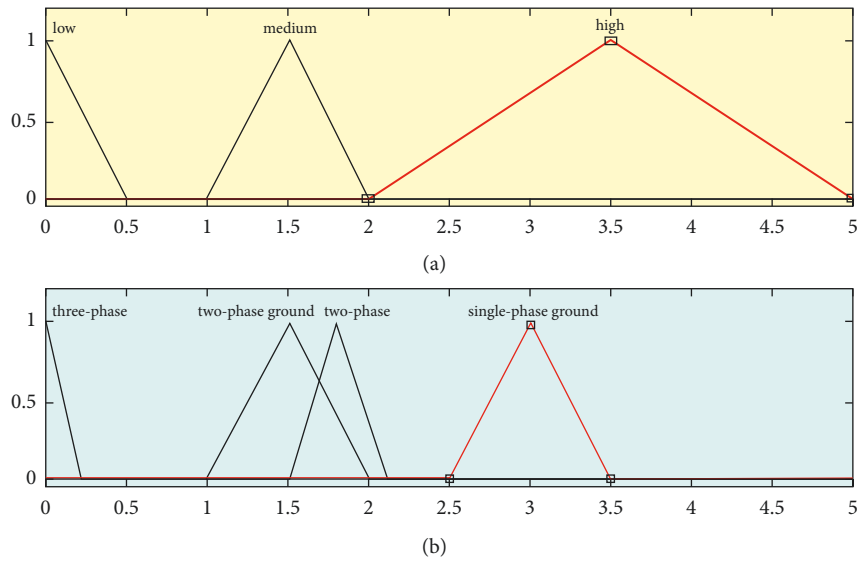

Figure 9: Membership functions. (a) Membership function of the input variable "A." (b) Membership function of output variable "Fault-type."

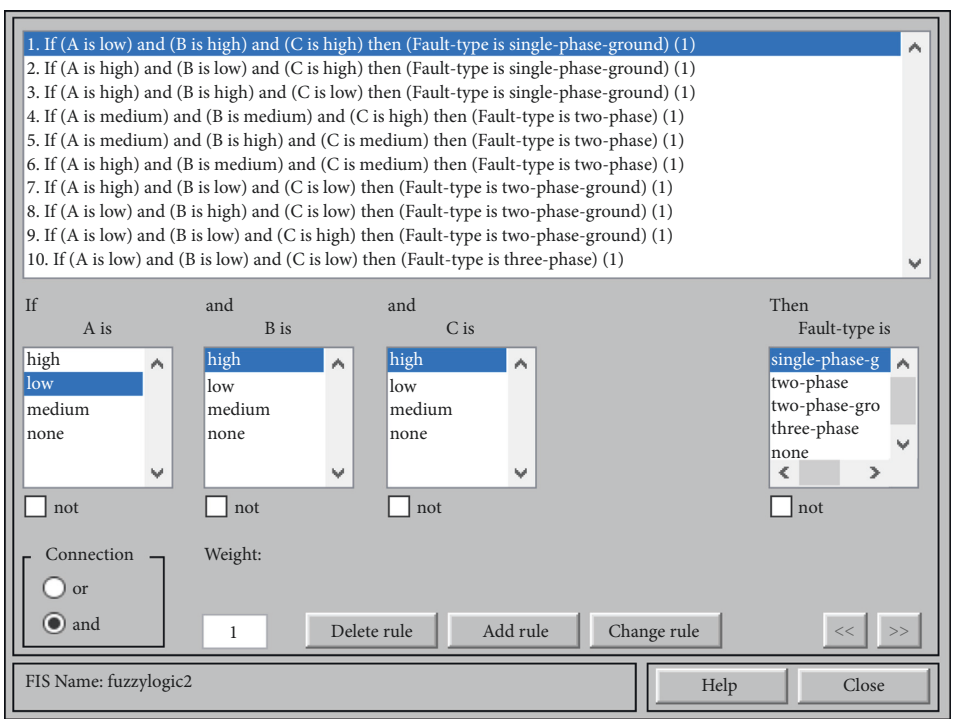

Figure 10: Fuzzy rules design.

Its purpose is to find a hyperplane to segment the samples, and the principle of segmentation is to maximize the interval, which is finally converted into a convex quadratic programming problem. SVM algorithm is applied to pattern recognition problems such as human image recognition and text classification. Compared with the algorithms such as neural networks, SVM has no local minimum issues and can solve the problem of ample feature space. However, conventional SVM supports binary classification only, and there is no general solution to nonlinear problems. Sometimes it is difficult to find a suitable kernel function. In the short-circuit fault problem, if the SVM method is used for classification, multiple hyperplanes need to be constructed for boundary calculation. Training samples need to be divided into training and testing samples, and training the SVM classifier [9, 32]. The proposed method does not need to train samples and does not need to design different classifiers according to fault types. The classification results are intuitive and accurate.

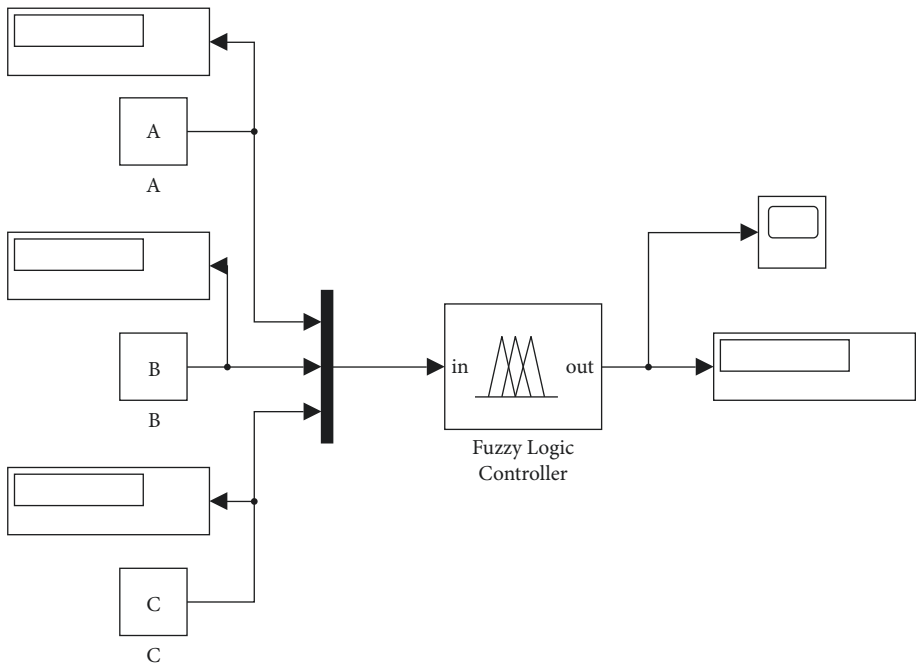

Figure 11: Fuzzy controller Simulink modeling.

Table 3: Fuzzy results.

A-input	B-input	C-input	Fuzzy results	Fault type
0.0000	0.8576	6.4677	≥2.5	
4.4352	0.0000	4.7824	≥2.5	Single-phase grounding fault
4.5897	5.6066	0.0001	≥2.5	
1.5825	1.5825	3.1678	1.8	
1.3326	2.6675	1.3327	1.8	Two-phase short-circuit fault
2.2888	1.1435	1.1434	1.8	
0.0000	0.0000	5.8795	1.5	
0.0000	4.1085	0.0001	1.5	Two-phase grounding fault
3.0958	0.0000	0.0000	1.5	
0.0000	0.0000	0.0000	0.05	Three-phase short-circuit fault

Table 4: Comparison of methods.

SN	Algorithm	Characteristics
1	Wavelet packet + Fuzzy logic	The membership function and fuzzy rules should be set correctly. Without sample training, high calculation efficiency, and high accuracy.
2	DWT + SVM	Fault location error is slightly larger due to training samples, a large amount of calculation, and long computing time.
3	ANN	Need learning training, require many learning samples, and long computing time.
4	GA-GNN	Need learning training, poor scalability, slow convergence, long computing time.

Compared with ANN. There are many types of artificial neural networks which have the advantage of possessing the ability to handle large-scale computations in parallel. However, the key to using artificial neural networks is the impact of the accuracy on the results, so it is vital important to choose the appropriate neural network structure. Secondly, artificial neural networks need learning training. Only by ensuring that many learning samples are obtained, the chance of wrong judgments can be reduced, and the desired results can be obtained [10–13]. In contrast, the proposed method has fewer steps, easy sampling, no need to do learning training, and can get high recognition efficiency.

Compared with GA-GNN. Like ANN, GA-GNN needs a lot of learning and training to achieve classification and isolation of the faulty parts. It needs to select the appropriate activation function and transform the wrong data into matrix form, and the change of weights also greatly influences the results. However, the proposed method with fewer

factors that can affect the accuracy of the results, less computation, and with high accuracy [14].

Compared with the above methods, the' Wavelet Packet + Fuzzy Logic' method used in this paper is more convenient, less computational, requires no additional learning and training, and has fewer influencing factors. It is more effective for power system short-circuit fault classification. Method comparative summary is shown in Table 4.

5. Conclusion

The reliability of power transmission in a power system is affected by various short-circuit faults, so it must be quickly identified and processed. To analyze the influence of the value of the three-phase circuit of the power system on the short-circuit fault type, this paper constructs a controllable power system transmission line simulation system to simulate the short-circuit fault. This paper proposes a hybrid scheme combining wavelet packet transform and fuzzy control. This scheme can analyze the details of high-frequency signals generated by short-circuit faults, and the processing results of eigenvalues are more effective. This method can accurately identify four short-circuit fault types of power system transmission lines and can effectively improve and optimize the monitoring efficiency of the power system state. In the future, we will further study and develop the adaptive fault diagnosis system for short-circuit faults and realize the automatic model of short-circuit fault from fault occurrence data analysis and waveform display to fault classification. The monitoring of short-circuit faults will be faster.

Data Availability

The data used to support the findings of this study are available from the corresponding author upon request.

Conflicts of Interest

The author declares no conflicts of interest.

References

[1] A. Borghetti, M. Bosetti, C. A. Nucci, M. Paolone, and A. Abur, "Integrated use of time-frequency wavelet decompositions for fault location in distribution networks: theory and experimental validation," *IEEE Transactions on Power Delivery*, vol. 25, no. 4, pp. 3139–3146, 2010.

[2] R. Huang, H. Jia, and X. Huang, "A routing algorithm based on weighted graph for power distribution network," in *Proceedings of the Simu Tools*, Chengdu, China, July 2019.

[3] S. Tuyou, W. Jiekang, Y. Weideng, and D. Anan, "Power supply risk assessment method for relay protection system faults," *Archives of Electrical Engineering*, vol. 65, pp. 803–814, 2016.

[4] A. Yadav and Y. J. A. A. N. S. Dash, "An overview of transmission line protection by artificial neural network: fault Detection, fault classification, fault location, and fault direction discrimination," *Advances in Artificial Neural Systems*, vol. 2014, Article ID 230382, 20 pages, 2014.

[5] H. Saber, H. Mostafa, E. S. Eldin, and F. Khalifa, "Testing and evaluation of transmission line relays using advanced tools," *Port-Said Engineering Research Journal*, vol. 18, 2014.

[6] J. Yuan, P. Gan, Z. Zhang, H. Zhou, and L. Wei, "Saturate" core fault current limiters for AC power systems: towards reliable, economical and better performance application," *High Voltage*, vol. 5, 2020.

[7] R. A. Shetzline, "Equivalent single-phase networks for calculating short-circuit currents due to grounds on three-phase star grounded systems," *Transactions of the American Institute of Electrical Engineers*, vol. 43, pp. 875–883, 1924.

[8] A. Yadav and A. Swetapadma, "A novel transmission line relaying scheme for fault detection and classification using wavelet transform and linear discriminant analysis," *Ain Shams Engineering Journal*, vol. 6, no. 1, pp. 199–209, 2015.

[9] S. Ekici, "Support Vector Machines for classification and locating faults on transmission lines," *Applied Soft Computing*, vol. 12, no. 6, pp. 1650–1658, 2012.

[10] A. G. Shaik and R. R. V. Pulipaka, "A new wavelet based fault detection, classification and location in transmission lines," *International Journal of Electrical Power & Energy Systems*, vol. 64, pp. 35–40, 2015.

[11] K. M. Silva, B. A. Souza, and N. S. D. Brito, "fault detection and classification in transmission lines based on wavelet transform and ANN," *IEEE Transactions on Power Delivery*, vol. 21, no. 4, pp. 2058–2063, 2006.

[12] A. Abdullah, "Ultrafast transmission line fault detection using a DWT-based ANN," *IEEE Transactions on Industry Applications*, vol. 54, no. 2, pp. 1182–1193, 2018.

[13] P. Malla, W. Coburn, and K. Keegan, "Power system fault detection and classification using wavelet transform and artificial neural networks," in *Proceedings of the Advances in Neural Networks – ISNN 2019*, pp. 266–272, Moscow, Russia, July 2019.

[14] S. K. Sharma, "GA-GNN (genetic algorithm-generalized neural network)-based fault classification system for three-phase transmission system," *Journal of the Institution of Engineers: Serie Bibliographique*, vol. 100, pp. 1–11, 2019.

[15] D. Sonoda, A. Z. de Souza, and P. M. da Silveira, "Fault identification based on artificial immunological systems," *Electric Power Systems Research*, vol. 156, pp. 24–34, 2018.

[16] S. Samantaray, "A systematic fuzzy rule based approach for fault classification in transmission lines," *Applied Soft Computing*, vol. 13, no. 2, pp. 928–938, 2013.

[17] L. Cai, X. L. Zhu, and T. Chen, "Analysis of multi-source excitation signal based on wavelet packet," in *Proceedings of the 3rd International Conference on Electron Device and Mechanical Engineering (ICEDME)*, Suzhou, China, May 2020.

[18] Z. He, *Wavelet Analysis and Transient Signal Processing Applications for Power Systems*China Electric Power Press, 2016.

[19] Y. W. Jianying Jiao and L. Honglang, "A gas regulator fault detecting method based on acoustic emission technology," in *Proceedings of the Symposium on Piezoelectricity, Acoustic Waves, and Device Applications*, Chengdu, China, October 2017.

[20] S. Li, P. Wang, and L. Goel, "A novel wavelet-based ensemble method for short-term load forecasting with hybrid neural networks and feature selection," *IEEE Transactions on Power Systems*, vol. 31, no. 3, pp. 1788–1798, 2016.

[21] C. Yanga and B. Lan, "Vibration control of piezoelectric flexible manipulator based on machine vision and improved PID," in *Proceedings of the IEEE International Conference on*

Power Electronics, Computer Applications (ICPECA), Shenyang, China, January 2021.

[22] S. Devi, K. Nagendra, S. R. Ola, and O. P. Mahela, "Detection of transmission line faults using discrete wavelet transform," in *Proceedings of the Conference on Advances in Signal Processing (CASP)*, pp. 133–138, IEEE, Pune, India, June 2016.

[23] S. Yanzhi, L. Yuming, C. Long, and C. Chen, "Research and application of clustering optimization algorithm based on fuzzy logic in 5G transmission line natural disaster monitoring," in *Proceedings of the IEEE 9th International Conference on Information, Communication and Networks (ICICN)*, pp. 298–303, Xian, China, November 2021.

[24] A. Rodríguez Ramos, C. Dominguez Acosta, P. J. Rivera Torres et al., "An approach to multiple fault diagnosis using fuzzy logic," *Journal of Intelligent Manufacturing*, vol. 30, pp. 429–439, 2016.

[25] M. Asati and S. Tiwari, "A new approach to powerflow management in transmission system using interline power flow controller," *Electric Power Systems Research*, vol. 108, 2016.

[26] K. Ramchandran and M. J. Vetterli, "Best wavelet packet bases in a rate-distortion sense," *IEEE Transactions on Image Processing*, vol. 2, pp. 160–175, 1993.

[27] B. Nasih and P. D. Assitant, *Application of Wavelet Transform and its Advantages Compared to Fourier Transform*, 2016.

[28] S. Samonto, S. Kar, S. Pal, and A. A. Sekh, "Best fit membership function for designing fuzzy logic controller aided intelligent overcurrent fault protection scheme," *Electrical Energy Systems*, vol. 31, 2021.

[29] M. Montazeri-Gh and S. J. Yazdani, "Application of interval type-2 fuzzy logic systems to gas turbine fault diagnosis," *Applied Soft Computing*, vol. 96, Article ID 106703, 2020.

[30] G. J. Klir and B. Yuan, *Fuzzy Sets and Fuzzy Logic - Theory and Applications*, 1995.

[31] B. Mutlu, E. A. Sezer, and H. A. Nefesliolu, "Transition of vagueness between layers of hierarchical fuzzy systems," in *Proceedings of the International Conference on Soft Computing*, Ho Chi Minh City, Vietnam, June 2014.

[32] C.-W. Hsu and C.-J. Lin, "A comparison of methods for multiclass support vector machines," *IEEE Transactions on Neural Networks*, vol. 13, pp. 415–425, 2002.