Hindawi
Mathematical Problems in Engineering
Volume 2022, Article ID 5752002, 10 pages
https://doi.org/10.1155/2022/5752002

Research Article

Temperature Control Algorithm of Underground Air Conditioning in Station

Lei Zheng,[1,2] **Yucai Zhao**,[2] **Xinchao Hu**,[2] **Wenlong Li**,[2] **Wei Zhou**,[2] **and Yuyue Fang**[2]

[1]*School of Control Science and Engineering, Shandong University, JiNan 250061, China*
[2]*Jicheng Electronics Co., Ltd., JiNan 250100, China*

Correspondence should be addressed to Lei Zheng; zhenglei@ieslab.cn

Received 23 February 2022; Accepted 19 April 2022; Published 31 May 2022

Academic Editor: Gengxin Sun

Aiming at the air-conditioning temperature control of underground station, the air-conditioning temperature controller of underground station is designed based on proportional-integral-differential neural network, the bat algorithm is used to select the initial weights, the radial basis function neural network prediction model is used to optimize the design of the predictor, and the designed control system is simulated on the MATLAB simulation platform. The simulation results show that the dynamic characteristics and steady-state characteristics of the PID controller optimized by bat algorithm are better than those of the PID controller tuned by conventional methods. After optimization by radial basis function neural network prediction model, the rapidity and stability of controller are effectively improved.

1. Introduction

At present, in most underground station air-conditioning control systems, direct open-loop control or closed-loop control with PID is the most common control strategy. When the process model of the controlled object can be obtained by mechanism derivation or easily identified, the controller parameters can be obtained by direct pole-zero assignment or frequency domain analysis, and the conventional control algorithm is effective. However, the air-conditioning control system is a complex nonlinear system, and the PID parameters obtained through empirical tuning are often only suitable for a certain working environment. When the object parameters drift, the parameters of the PID regulator will not change correspondingly, resulting in the decline of control quality. The difficulties in air-conditioning system control are as follows: (1) it is difficult to accurately determine the mathematical model of air-conditioning system under different working conditions; (2) the random interference of people flow and external environment on the controlled indoor environment is hard to predict; (3) the controlled area is large, and there are large inertia characteristics and pure lag links that are difficult to eliminate in control [1, 2].

Over the years, many researchers have done a lot of research work in the direction of stability analysis, parameter tuning, and parameter self-adaptation of PID controller, but few research results have really been extended to engineering projects. According to the development stages, PID parameter tuning can be divided into classical tuning method represented by frequency domain analysis, empirical tuning method represented by Ziegler–Nichols, and intelligent tuning method which is currently popular in research. According to the application form, it can be divided into online setting and offline setting methods. Offline setting method is often to adjust the parameters before the PID controller is put into operation. When the controller is dealing with various working modes, it is necessary to write multiple groups of parameter combinations in the controller and switch according to different external states, so its working mode is limited, and the undisturbed switching problem in different modes needs to be considered. Online tuning method is to introduce the performance index evaluation function into the PID controller during operation, calculate the correction amount according to the performance index function in each control cycle or each specific control cycle, and adjust the parameters of the PID

controller in real time, so that better control effect can be achieved. With the development of science and technology, machine learning technology including the neural network model has been widely used in many fields, such as subway passenger flow optimization [3, 4], taxi demand forecast [5], bicycle station planning [6], and fetal ultrasound standard plane recognition [7]. The main contribution of this paper is to design an adaptive PID controller with excellent performance by combining the characteristics of underground station air conditioning system and neural network related algorithms. Compared with the conventional PID controller, the designed controller can greatly improve the dynamic quality of the controlled object, adapt to the time-varying characteristics of the process, ensure the temperature control system to run in the best state, make the air-conditioning system control more accurate, and achieve the effect of energy saving. At the same time, the system is easy to realize in engineering, debug and put into operation, and has the value of engineering popularization.

2. Design of Temperature Controller for Underground Air Conditioning in Station

2.1. System Structure of Air Conditioning Cold Station. The research object of this paper is the air-conditioning cold station system of underground station. As shown in Figure 1, the air-conditioning cold station system of underground station is composed of cooling tower, cooling water pump, refrigerating units, air-conditioning terminal, etc., which is mainly used to cool the air in the station. The water source of the cooling tower sends the cooled air to the public area through the cooling water pump and refrigerating unit to adjust the temperature in the station.

2.2. Neuron Controller Structure. Neural network has the characteristics of large-scale parallel processing, high fault tolerance and robustness, self-organizing learning, and real-time processing, and can construct effective intelligent controllers for nonlinear and time-varying systems.

Single neuron controller inherits the advantages of conventional PID controller, such as simplicity, practicality, and easy realization through programming in the PLC control system. It has fewer adjustable parameters, easy debugging, and better control quality than conventional PID controller [8]. A classic neuron intelligent controller algorithm is shown in Figure 2:

$$\begin{cases} e(k) = r(k) - y(k) \\ x_1(k) = e(k) - e(k-1) \\ x_2(k) = e(k) \\ x_3(k) = e(k) - 2e(k-1) + e(k-2) \end{cases}. \tag{1}$$

The target function is

$$J_C = \frac{1}{2}[r(k) - y(k)]^2 = \frac{1}{2}e^2(k). \tag{2}$$

The neuron characteristics are as follows:

$$\begin{cases} w_i(k+1) = w_i(k) + \Delta w_i(k) \\ \Delta w_i(k) = -\lambda \dfrac{\partial J_C}{\partial w_i(k)} \end{cases}, \tag{3}$$

where $i = 1, 2, 3$; 取$0 < \lambda < 1$. $x_1(k)$ represents the first-order difference, $x_2(k)$ represents the system error, and $x_3(k)$ represents the error accumulation.

2.3. Bat Algorithm Used to Select Initial Weights

2.3.1. Optimization Mechanism of Bat Algorithm. Bat algorithm is a kind of swarm intelligence optimization algorithm proposed by Xin-She Yang in 2010. In nature, the woven bat emits ultrasonic pulses, and the information of prey is determined by analyzing the ultrasonic waves reflected by objects. Bats randomly change the speed, position, and frequency of ultrasonic waves to search for food in this way. In the process of approaching the prey continuously, the woven bat will weaken the loudness and increase the frequency of ultrasonic pulses, thus confirming that the distance between the woven bat and the prey is decreasing [9].

A large number of studies have shown that compared with particle swarm optimization, genetic algorithm, and other optimization algorithms, the bat algorithm has fewer iterative steps and higher optimization accuracy. Therefore, under ideal circumstances, applying the bat algorithm to offline optimization of PID can often obtain a set of better initial values of PID parameters. In this paper, the bat algorithm is used to determine the initial weights of single neuron, that is, the selection process of initial PID parameters, learning rate, magnification, and other parameters.

The optimization mechanism of the bat algorithm is shown in Figure 3. The ITAE function of the controlled variable is selected as the objective function; according to the object model obtained by the identification algorithm, a set of PID parameters that minimize the ITAE index are obtained through iterative algorithm optimization and then applied to PID control. [9].

2.3.2. Bat Algorithm Optimizes the Calculation Flow of PID. The PID parameter tuning process based on the bat algorithm is shown in Figure 4. Following the foraging process of bats, the frequency, speed, and position of bats are updated as follows:

$$\begin{aligned} f_i &= f_{\min} + (f_{\max} - f_{\min})\beta, \\ v_i^{t+i} &= v_i^t + \left(x_{g\text{best}} - x_i^t\right) f, \\ x_i^{t+1} &= x_i^t + v_i^{t+1}, \end{aligned} \tag{4}$$

where $\beta \in [0, 1]$ is a random number; $f_{\min}$, $f_{\max}$ are the range of frequency f. According to the specific application, it is determined that $x_{g\text{best}}$ is the global optimal solution at the t time [10].

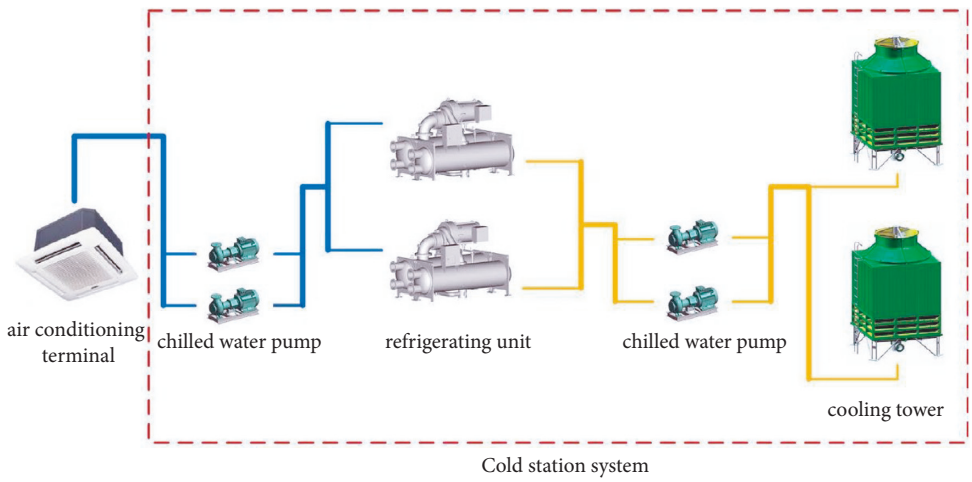

Figure 1: Composition of metro air conditioning cold station system.

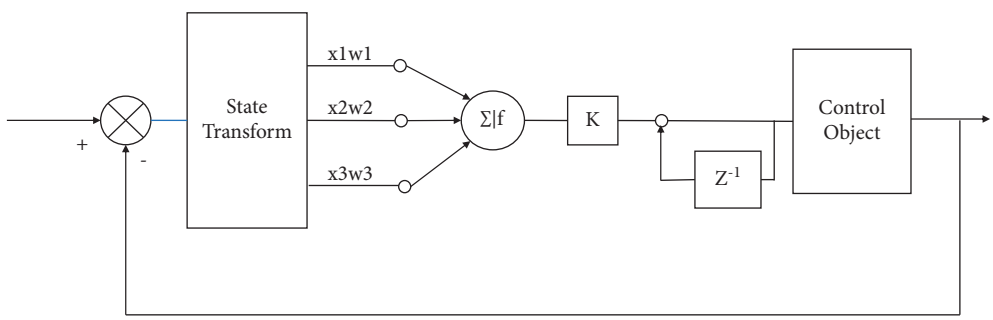

Figure 2: Neuron intelligent controller:

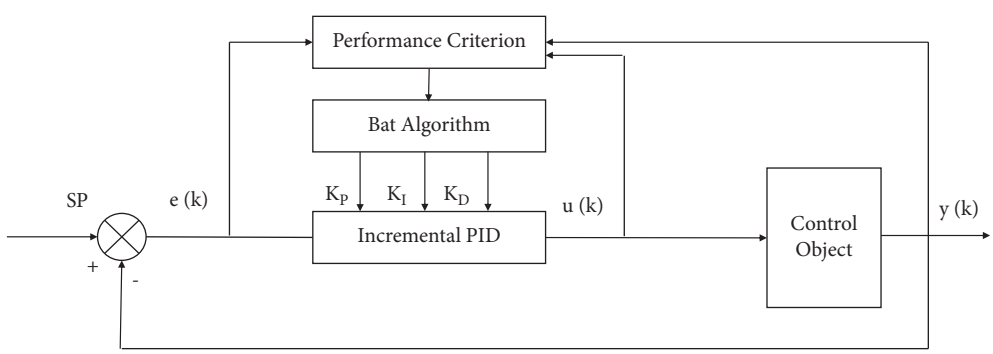

Figure 3: Bat algorithm optimization.

For local optimization, once the current global optimal solution is determined, each bat will make a random movement according to the following formula, thus generating a new set of solutions [11].

$$x_{new} = x_{old} + \varepsilon A^t, \tag{5}$$

where $\beta \in [-1, 1]$ is a random number; A^t is the average loudness of all bats at time t.

2.4. Neural Network Prediction Model. Generally speaking, the control object and control process in industry can be described by the first-order or second-order time-delay model, and the feedback control can be realized by using the method of combining MFAP with PID. The parameters of the autoregressive model based on time series are estimated by the Levinson algorithm in MFAP predictor. MFAP without model predictor can form a local prediction model based on historical data of length m. After giving one of the most advanced prediction values, the predicted value is used to replace the process value at the future sampling time. By linking iterative processes, the optimal P-step advanced prediction value is obtained and assigned to the process value of PID. Neural network has strong nonlinear mapping ability, and neural network has been widely studied and applied in model identification. Relevant literature shows

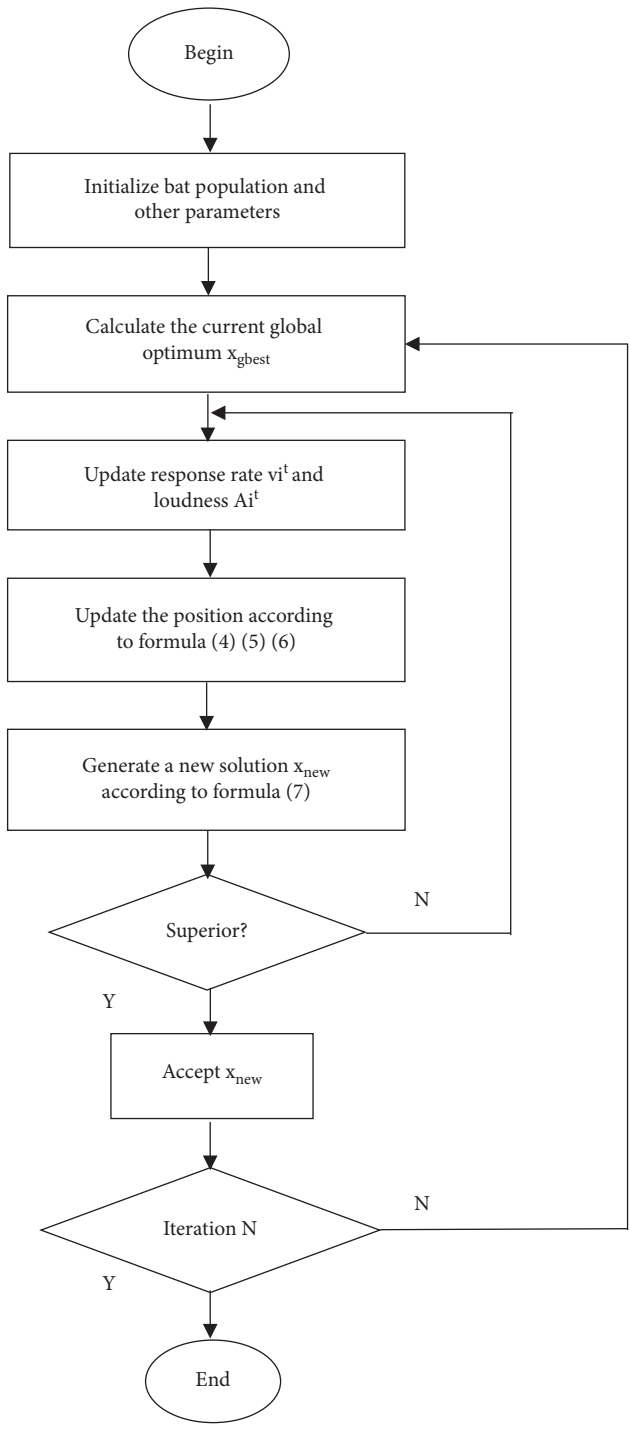

Figure 4: PID parameter tuning process based on bat algorithm.

that compared with the autoregressive (AR) model, the neural network has better accuracy in regression prediction. In this paper, radial basis function (RBF) neural network is selected to identify the controlled process, and the process value of the object is assigned to the process value feedback end of PID, which will make the controller act in advance and the output value change in advance, so that the object can track the set value more quickly and stably, and improve the stability and robustness of the system [12].

Neural network has strong nonlinear mapping ability, and neural network has been widely studied and applied in model identification. Relevant literature shows that compared with the autoregressive model (AR), the neural network has better accuracy in regression prediction. The essence of system identification based on the neural network is to choose a suitable neural network model to approach the actual controlled system and to approach the dynamic system through continuous sample learning. In the design of

the identifier, the main factors that affect its identification accuracy and generalization ability are as follows:

(1) Structural complexity and sample complexity. The dimension of neural network equivalent model should be greater than or equal to that of the sample.

(2) Sample quality. The accuracy and scale of sample data are particularly important to the accuracy of identification network, and the processing of pre-training dataset and the design of filtering algorithm are important contents to be paid attention to.

(3) A priori knowledge. By using prior knowledge, the range of parameters such as order and time delay of the model is limited so as to improve the accuracy of the model and reduce the workload in the pre-training process.

(4) Initial weight. Neural network is sensitive to the setting of initial weights. At the initial stage, it uses smaller random weights for training, and after many trainings, it gets ideal weights.

(5) Study time. By optimizing the calculation process of the neural network, the learning time of the neural network is limited to meet the real-time requirements in the control system.

2.4.1. Design of Predictor Based on RBF Neural Network. In this paper, RBF is selected to identify the controlled process, and the process value of the object is assigned to the process value feedback end of PID, which will make the controller act in advance and the output value change in advance, so that the object can track the set value more quickly and stably, and improve the stability and robustness of the system.

In the application of neural network for system identification, multilayer feedforward neural network (MFN) and radial basis function (RBF) neural network are two common types. Compared with MFN, RBF has faster convergence speed and approximation accuracy because of its simpler network structure and more effective learning algorithm. We select the serial-parallel identification structure [13], and the established multi-input single-output RBF identification model is shown in Figure 5.

RBF neural network has a three-layer network structure, which consists of input layer, hidden layer, and output layer [14]. The input $u(k)$ and output $y(k)$ of the identified system are used as the input of the identification model. The input layer of the network is

$$X(k) = [x_1(k), \cdots, x_2(k)] = \left[y(k-1), \ldots, y\left(k-n_y\right), u(k-1), \ldots, u\left(k-n_u\right)\right]. \tag{6}$$

The forecast output is expressed as

$$\hat{y}(k) = N(X(k), w) = N\left[y(k-1), \ldots, y\left(k-n_y\right), u(k-1), \ldots, u\left(k-n_u\right), w\right]. \tag{7}$$

We adopt performance indicators:

$$J_C = \frac{1}{2}[r(k) - y(k)]^2 = \frac{1}{2}e^2(k). \tag{8}$$

Weight adjustment:

$$\begin{cases} w_i(k+1) = w_i(k) + \Delta w_i(k) \\ \Delta w_i(k) = -\lambda \dfrac{\partial J_C}{\partial w_i(k)} = \lambda[r(k) - (k)]\dfrac{\partial y(k)}{\partial u(k)} x_i(k) \end{cases}, \tag{9}$$

where $i = 1, 2, 3$; $0 < \lambda < 1$. $\partial y(k)/\partial u(k)$ is the Jacobian information of the controlled process, which is obtained according to the online identification output of RBF, that is, $\partial y(k)/\partial u(k) \approx \partial y_m(k)/\partial u(k)$

$$\frac{\partial y_m(k)}{\partial u(k)} = \sum_{j=1}^{m} w_j(k-1) R_j(x(k)) \frac{c_j\left(n_y+1\right)(k-1) - u(k)}{b_j^2(k-1)}. \tag{10}$$

A nonlinear transformation weighted relation is used to modify Ku online;

$$K(k) = K_0(k) + \frac{\xi[r(k) - y(k+d)]^3}{r^3(k)}. \tag{11}$$

2.4.2. Comparison of Prediction Effects between RBF Neural Network and AR Model. At present, many literature studies show that the accuracy of the neural network is far greater

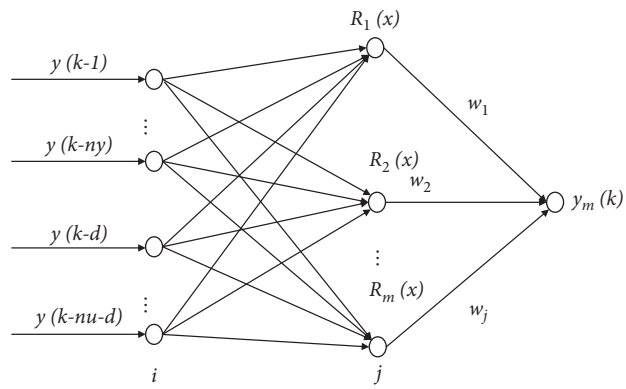

Figure 5: RBF neural network identifier structure.

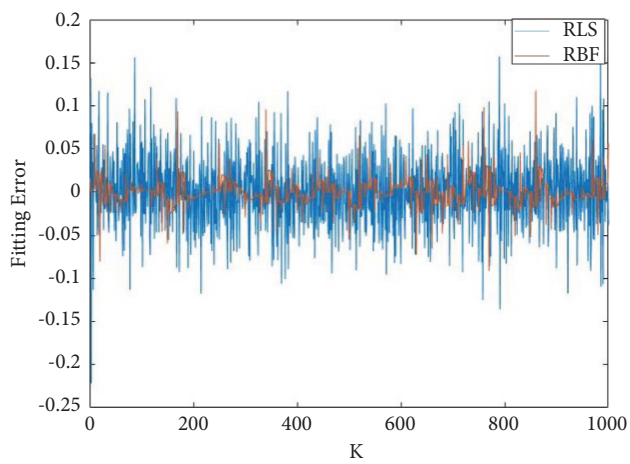

Figure 6: Fitting error, RBF model compared with AR model.

than that of the regression model in nonlinear system identification and prediction [15]. The figure below shows the comparison result of the accuracy of the AR model regression model obtained by using the RBF neural network and AR model in process model identification.

As shown in Figure 6, blue is the prediction result of AR model and red is the prediction result of RBF model. According to the comparison results, it can be seen that the result error based on RBF identification is far less than that of the recursive AR model, which proves that it is reasonable to use RBF as the identification of this process. The RBF identification algorithm designed in the figure adjusts the weight based on the current error, which can be used for local model identification or global identification. When the network scale is the same, the local model has better accuracy, but the generalization ability is poor, the global model has stronger generalization ability, and the prediction accuracy decreases slightly. The loss of accuracy can be compensated by increasing the size of training set and the number of hidden layers [16].

3. Simulation Study

In order to preliminarily verify the effectiveness and superiority of the proposed control algorithm, the algorithm is simulated by MATLAB software. The typical second-order time-delay link $sys(s) = e^{-2s}/0.7s^2 + 0.8s^2 + 0.5$ is selected as the controlled model, the step signal is used as the excitation of the control closed loop, and the white noise signal and the step signal are used for disturbance test, respectively. The experimental results and conclusions are as follows:

3.1. Bat Algorithm Tuning + PID Conventional Method. According to the bat algorithm, the number of iterations is 50, the initial population is 20, and the optimization space is: $Kp \in [0.01, 5]$; $Ki \in [0.01, 15]$; $K\ d \in [0.01, 0.5]$. The input signal is a step signal with amplitude of 1. In order to obtain good dynamic performance and flawless tracking of the signal, the minimum absolute error integral criterion is adopted as the objective function, and the square term of the control quantity is added to the objective function to prevent the control energy from being too large:

$$J = \int_0^\infty w_1|e(k)| + w_2u^2(k) + w_3|e(k)|\mathrm{d}t, \tag{12}$$

where $e(k)$ is the current time error; $U(k)$ is the controller output; w_1, w_2, w_3 are weights, $w_1 = 0.999$, $w_2 = 0.001$, when $e(k) = y(k) - r(k) < 0$, $w_3 = 10$; Otherwise, $w_3 = 0$. That is to

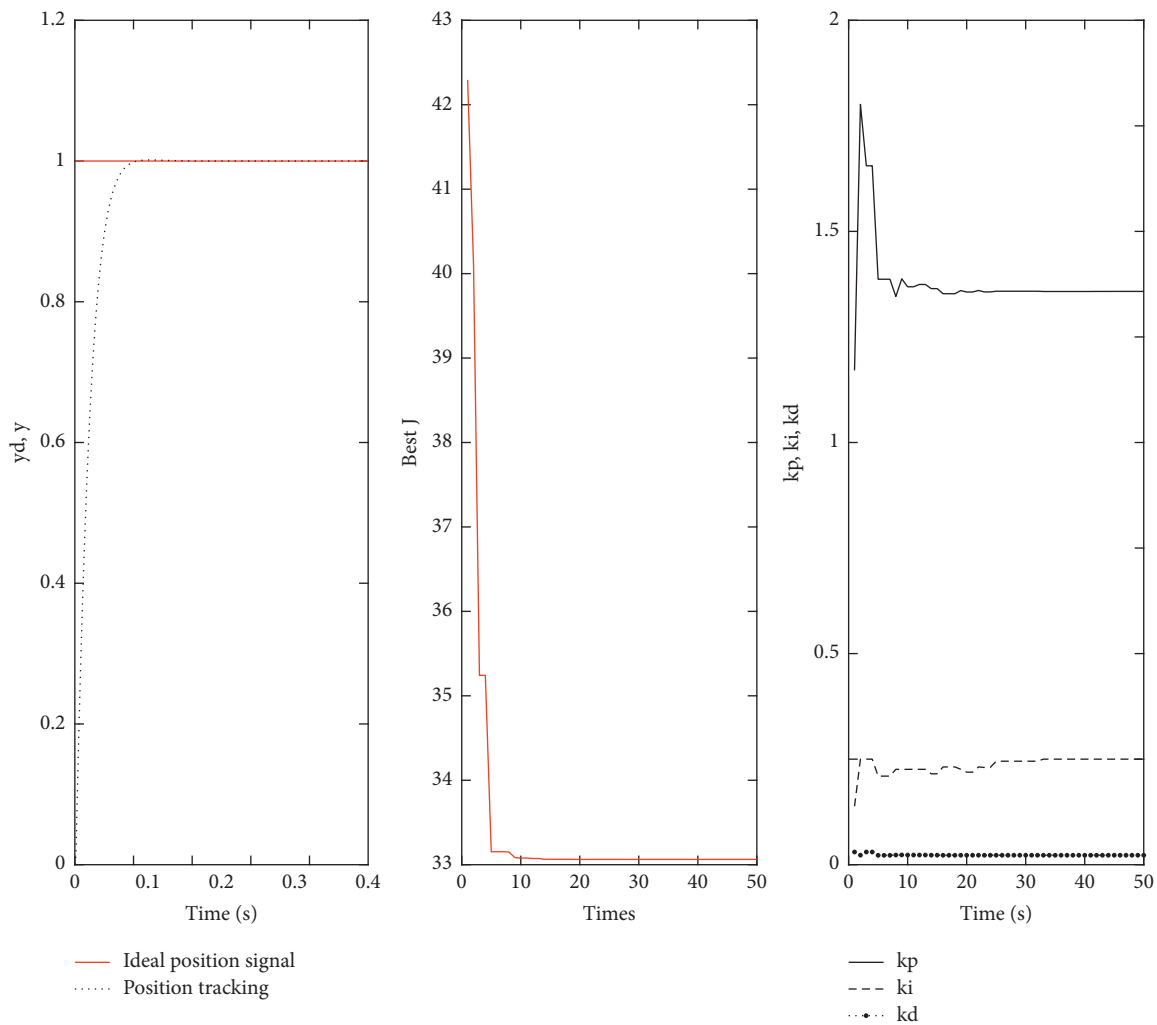

Figure 7: PID setting process curve (step response, energy drop curve, and parameter change curve). According to the attenuation curve, the PID parameters obtained by setting are Kp = 0.2960; Ki = 0.1297; Kd = 0.1689.

say, the overshoot is used as the penalty index for the optimization process to prevent the overshoot of the system from being too large. The number of iterations is 50, and the PID tuning results are $K_P = 1.376, K_I = 0.271, K_D = 0.051$. The setting process is shown in Figures 7 and 8.

10% step interference is added in the 8th simulation, and the result is shown in Figure 9. It can be seen that the performance of the controller optimized by the bat algorithm for PID parameters is far better than that tuned by the conventional method, with shorter rise time and smaller overshoot, and it can be stabilized in a shorter time after disturbance, and its dynamic and steady-state characteristics are better than those of PID tuned by conventional method.

3.2. Bat Algorithm Tuning + Proportional-Integral-Differential Neural Network + Prediction Model Second-Order Time-Delay Model. As shown in Figure 10, the initial weights of single neuron PID use the PID parameters optimized by the bat algorithm as the initial values of w1, 2, and 3, the magnification Ku is set to 1, and the learning rates of Kp, Kd, and Ki are 0.3, 0.35, and 0.33, respectively. Use step signal for excitation, and apply 10% step interference at 80 s. The response curve record is shown in Figure 11.

The control effect of the control system optimized by using proportional-integral-differential neural network (PIDNN) and RBF prediction model is better than that adjusted by conventional methods. The step curve rises faster and there is no overshoot. Through the step interference test, it can be seen that the optimized PID controller has better anti-interference ability, and the controlled quantity can still be quickly restored to a stable state. Compared with traditional methods, the neural network adaptive predictive controller used has the outstanding advantages of less tuning

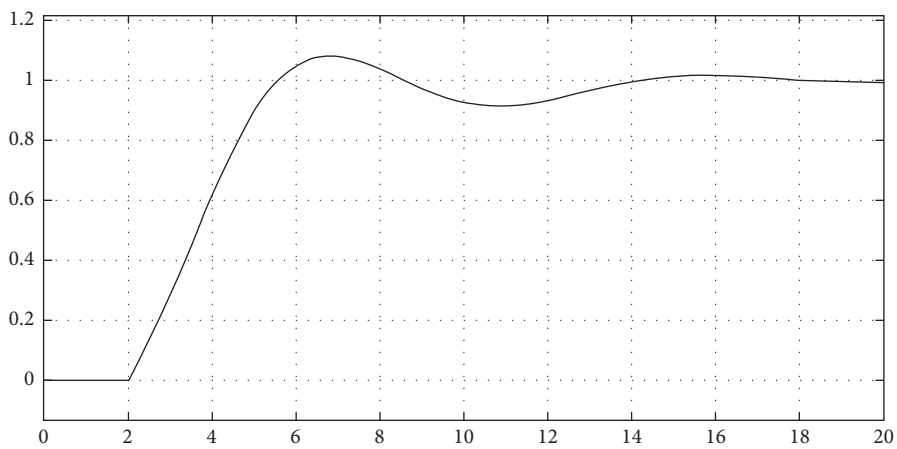

Figure 8: PID response curve of empirical setting method.

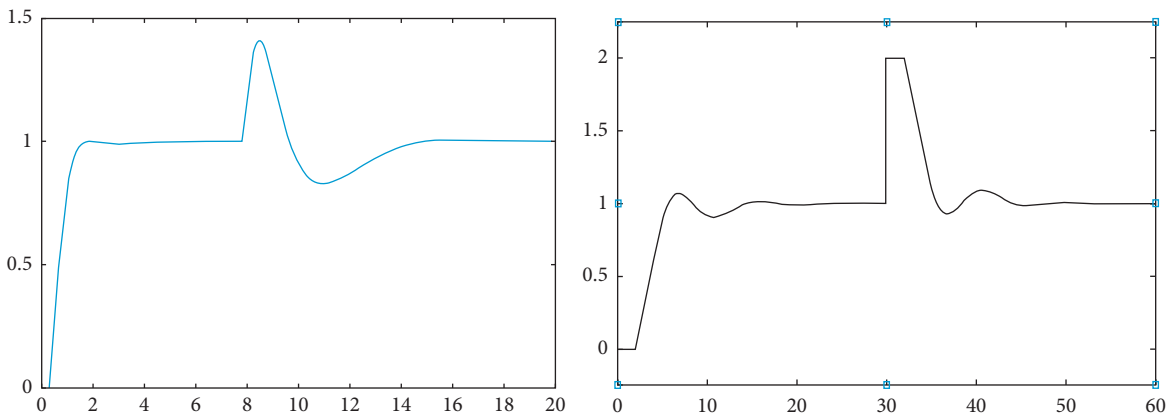

Figure 9: Step interference test.

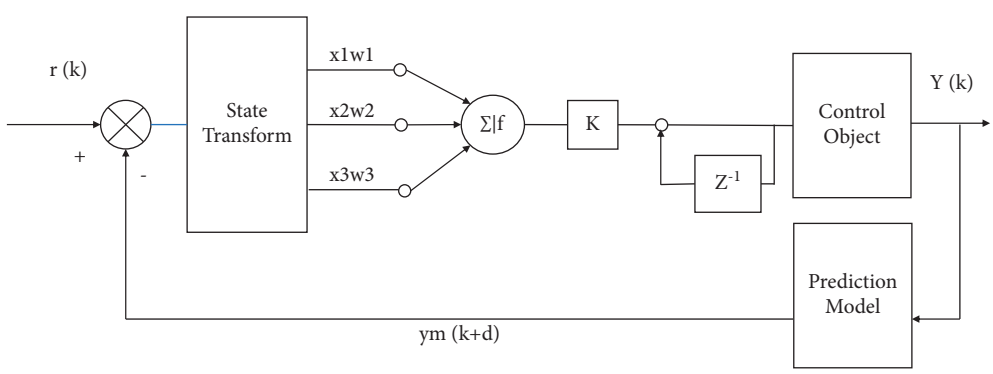

Figure 10: Predictive model controller.

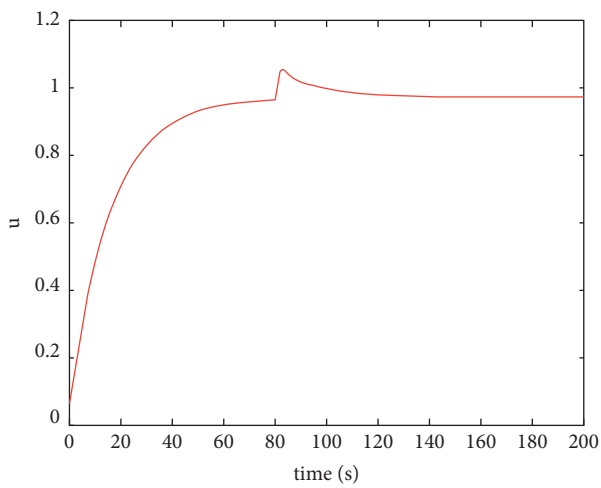

Figure 11: Response curve.

parameters, easy convergence, short transition process, difficult oscillation and divergence, and easy realization of engineering configuration.

4. Conclusions

In this paper, the air-conditioning temperature controller of underground station is designed based on PIDNN, the bat algorithm is used to select the initial weights, the RBF neural network prediction model is used to optimize the design of the predictor, and the designed control system is simulated. The performance of the controller optimized by the bat algorithm for PID parameters is far better than that of the conventional method, and its dynamic characteristics and steady-state characteristics are better than those of the conventional method. The control method proposed in this paper combines RBF neural network controller with PICNN, making full use of the strong adaptive learning characteristics of the neural network. After optimization of PIDNN and RBF predictive model, the control scheme solves the problems of large overshoot and long response time in the air-conditioning temperature control system, eliminates static errors, improves the rapidity and stability, and achieves remarkable application effect.

Data Availability

The dataset used in this paper are available from the corresponding author upon request.

Conflicts of Interest

The authors declare that there are no conflicts of interest.

Authors' Contributions

All authors have seen the manuscript and approved to submit to your journal.

Acknowledgments

This work was sponsored in part by Shandong Provincial Department of Industry and Information Technology Project 202060102367 Name: Research on Key Technologies of Smart Urban Rail Operation and Maintenance System Based on Internet of Things; Shandong Natural Science Foundation No.: ZR2020QE268. Name: Basic Application of ABP-IoT Technology in Subway Tunnel Fans Research on Energy Saving Technology of Environmental Control System, Project No.: 2019-K7-5.

References

[1] Y. Deng, "Research on common problems in design and construction of subway ventilation and air conditioning system," *China New Communications*, vol. 19, no. 3, pp. 102-103, 2017.

[2] L. He, "Energy-saving design of subway ventilation and air conditioning," *China Construction*, vol. 7, no. 3, pp. 98-99, 2014.

[3] J. Zhou, H. Wang, D. Sun, S. Xu, M. Lv, and F. Yu, "Optimization scheme of large passenger flow in huoying station, line 13 of beijing subway system," *Computers, Materials & Continua*, vol. 63, no. 3, pp. 1387–1398, 2020.

[4] W. Li, M. Zhou, and H. Dong, "Classifications of stations in urban rail transit based on the two-step cluster," *Intelligent Automation & Soft Computing*, vol. 26, no. 3, pp. 531–538, 2020.

[5] D. Cao, K. Zeng, J. Wang, and P. Sharma, "BERT-based deep spatial-temporal network for taxi demand prediction," *IEEE Transactions on Intelligent Transportation Systems*, vol. 11, no. 2, pp. 1–13, 2021.

[6] J. Chen, K. Li, K. Li, P. S. Yu, and Z. Zeng, "Dynamic planning of bicycle stations in dockless public bicycle-sharing system using gated graph neural network," *ACM Transactions on Intelligent Systems and Technology*, vol. 12, no. 2, pp. 1–25, 2021.

[7] B. Pu, K. Li, S. Li, and N. Zhu, "Automatic fetal ultrasound standard plane recognition based on deep learning and IIoT," *IEEE Transactions on Industrial Informatics*, vol. 17, no. 11, pp. 7771–7780, 2021.

[8] J. Sun, *Intelligent Temperature Control System of Resistance Furnace Based on Single Neuron PID*, Dalian University of Technology, Liaoning, Dalian, 2008.

[9] L. Lu, G. Zhang, and W.-M. Wong, "PID parameter tuning based on bat algorithm," *Control Engineering*, vol. 24, no. 3, pp. 548–553, 2017.

[10] C. Wu, W. Huang, and H. Meng, "Research on air-fuel ratio control of engine based on bat algorithm tuning PID," *Journal of Suzhou University of Science and Technology (Natural Science Edition)*, vol. 37, no. 3, pp. 80–84, 2020.

[11] X. Yang, "A new metaheuristic bat-inspired algorithm," in *Proceedings of the Nature Inspired Cooperative Strategies for Optimization (NICSO 2010)*, J. R. González, D. A. Pelta, C. Cruz, G. Terrazas, and N. Krasnogor, Eds., , April 2010.

[12] L. Liu, X. Liu, and X. Zhou, "Decoupling method of multivariable system based on fuzzy neural network," *Journal of Ocean University of China*, vol. 43, no. 2, pp. 99–104, 2013.

[13] W. Cai and H. Han, *Research on Port Logistics Demand Forecast Based on BP and RBF Neural Network Combination Model*, pp. 1–7, Journal of Zhengzhou University (Engineering Edition, Zhengzhou, 2020.

[14] W. Yan and X. Zhang, "Speech recognition system based on TMS320C5409," *Journal of Taiyuan University of Technology*, vol. 6, pp. 524–527, 2007.

[15] J. Li, D. Liu, and Y. Zhu, "Decoupling control of VAV air conditioner based on neural network," *Journal of shenyang jianzhu university (Natural Science Edition)*, vol. 29, no. 1, pp. 187–192, 2013.

[16] L. Zheng, G. Li, J. An, and F. Lou, "Mathematical modeling and optimal control of underground ventilation and air conditioning in station," *Mathematical Problems in Engineering*, vol. 2022, Article ID 5032564, 1–16 pages, 2022.