Hindawi
Mathematical Problems in Engineering
Volume 2022, Article ID 7042091, 7 pages
https://doi.org/10.1155/2022/7042091

Research Article

Approximate Solutions of the Jet Engine Vibration Equation by the Homotopy Perturbation Method

M. Abul Kawser[1] and Md Abdul Alim[2]

[1]*Department of Mathematics, Islamic University, Kushtia, Bangladesh*
[2]*Department of Mathematics, Rajshahi University of Engineering & Technology, Rajshahi, Bangladesh*

Correspondence should be addressed to Md Abdul Alim; alim.math.iu@gmail.com

Received 10 October 2022; Revised 24 November 2022; Accepted 8 December 2022; Published 22 December 2022

Academic Editor: Marco Antonio Taneco Hern ndez

In this paper, we consider the jet engine vibration system. With the help of the homotopy perturbation method (HPM), we solve the jet engine vibration (JEV) equation, which is a second-order nonlinear differential equation in the presence of damping and external forces. We compare the results with the corresponding numerical method to show the efficiency and reliability of this method. The findings demonstrate how well HPM works as a solution to these concerns, and it is anticipated that HPM will be used in a variety of new problems.

1. Introduction

Nonlinearity characterizes the majority of scientific issues and physical events. Finding exact analytical answers for these kinds of problems can be challenging, with the exception of a small number of cases. As a result, efforts have been undertaken to create novel methods for getting analytical answers that are reasonably close to the precise solutions [1, 2]. The previous years, several modern methods have been used to find approximate solutions of nonlinear problems, that is the inverse scattering method (ISM) [3], homogeneous balance method (HBM) [4], Hirota's bilinear method (HBM) [5, 6], the natural decomposition method (NDM) [7], Li-He's modified homotopy perturbation method (MHPM) [8], the reduced differential transform method (RDTM) [9, 10], the enhanced homotopy perturbation method (EHPM) [11], Adomian decomposition method (ADM) [12], the variational iteration method (VIM) [13, 14], the homotopy perturbation method (HPM) [15, 16], etc. The HPM provides highly accurate solutions to nonlinear problems, which can easily be understood in comparison to the numerical techniques.

He et al. developed the homotopy perturbation method (HPM). It does not require linearization process and is a powerful, effective, and efficient method for finding solutions to linear and nonlinear differential equations. The fundamental weakness of the classic perturbation method which is a small parameter assumption has been overcome by the HPM. The embedding parameter $p \in [0, 1]$ is changed from 0 to 1 and utilized as an expanding parameter for the tiny parameter in the perturbation method in the homotopy perturbation approach, which results in a homotopy equation. The produced homotopy issue is transformed into an easy-to-solve linear equation when $p = 0$, and when $p = 1$ then back into the original equation. As a result, the solution process gradually transforms a linear equation into a nonlinear equation, and when $p = 1$, it converges to the precise answer. Due to the fact that it is independent of an extremely small equation parameter, the solution holds true for both weak and strong nonlinear instances. He applied successfully this method to solve a variety of nonlinear equations in science and engineering [17–19]. This HPM has already been effectively employed by numerous researchers to resolve numerous linear and nonlinear issues such as solving heat radiation equations [20], KdV PDE studied by Ganji and Rafei [21], nonconservative oscillators [22], Laplace equation [23], time fractional partial integro-differential equations [24], wave equations [25], heat conduction and

convection equations [26], integral equations [27], couple spring mass system [28] and is also applicable in other areas [29–31]. He [32] applied HPM for solving Blasius differential equation [33] and nonlinear boundary value problems. Also, Anjum et al. [34, 35] summarized and perfected HPM in a series of papers, and demonstrated its effectiveness through nonlinear differential equations. In majority of cases, the HPM can present a series of solutions very rapidly. It usually takes a few numbers of iterations to get a very accurate solution. The purpose of this article is to develop the HPM and use it to solve nonlinear ordinary differential equations for jet engine vibration [36].

2. Homotopy Perturbation Method (HPM)

To describe the homotopy perturbation method, we take into consideration the following form of equation:

$$G(v(x)) - f(r) = 0, r \in \Omega. \tag{1}$$

As for the boundary circumstances,

$$B\left(v, \frac{\mathrm{d}v}{\mathrm{d}x}\right) = 0, r \in \Gamma, \tag{2}$$

where $G, L,$ and Γ are the general differential operator, boundary operator, and the boundary of the domain Ω, respectively; and $f(r)$ is a known analytical function. Now, we divide the differential operator G into two parts of linear L and nonlinear N, and then (1) provides

$$N(v(x)) + L(v(x)) - f(r) = 0. \tag{3}$$

The following homotopy is created by the HPM, $u(r, p)$: $\Omega \times [0, 1] \longrightarrow R$, which satisfies

$$\begin{aligned} H(u, p) = (1 - p)[L(u) - L(v_0)] \\ + p[G(u) - f(r)] = 0. \end{aligned} \tag{4}$$

(4) can be written as follows:

$$\begin{aligned} H(u, p) = L(u) - L(v_0) + pL(v_0) \\ + p[N(u) - f(r)] = 0. \end{aligned} \tag{5}$$

Here, v_0 and $p \in [0, 1]$ are an initial approximation and embedding parameters of (1) and satisfies the boundary conditions. We can write the following from (4):

$$\begin{aligned} H(u, 0) = L(u) - L(v_0) = 0, \\ \text{and} \\ H(u, 1) = G(u) - f(r) = 0. \end{aligned} \tag{6}$$

Here, the changes in p from 0 to 1 are those of $u(r, p)$ from $v_0(r)$ to $v(r)$. This system is referred to as the deformation in topological space, and $L(u) - L(v_0)$ and $G(u) - f(r)$ are called homotopy. It can be assumed that the first embedded parameter p can be utilized as a tiny parameter and that the solution to (4) can be characterized as a power series in p in accordance with the theory of homotopy perturbations:

$$u = u_0 + pu_1 + p^2u_2 + p^3u_3 + \cdots\cdots. \tag{7}$$

Assuming $p = 1$ in (7), the (1) has the following solution:

$$v = \lim_{p \longrightarrow 1} u = u_0 + u_1 + u_2 + u_3 + \cdots\cdots. \tag{8}$$

The nonlinear operator $G(u)$ is operating the convergent rate. The (8) is convergence in most cases.

3. The Jet Engine Vibration Model

The jet engine system shown in Figure 1(a) is hidden in the wings of an aircraft. In order to simulate how a jet engine moves horizontally, an elastic beam is used to support a rigid body. The moment of inertia around the center of gravity axis C is J, and the mass of the engine is m. The elastic beam is also modeled by considering it as a massless rod that is hinged at A, and the rotating spring constant κ provides exactly a restoring torque $\kappa\theta$, Figure 1(b) shows the angle θ created by the rod and the vertical line. For small rotations, that is $|\theta| \ll 1$, set the jet engine motion equation with θ to find the frequency of natural vibration.

In the system, the hinge revolves at A. The jet engine's moment of inertia around its axis of mass C is J. Using the parallel axis theorem, the jet engine's moment of inertia around axis A is as follows:

$$J_A = J + mL^2. \tag{9}$$

The jet engine carries gravity mg. We remove the elbow at A and replace it with two parts R_{Ax} and R_{Ay}, which are components of the reaction force. Since the angle θ and the angular acceleration $\ddot{\theta}$ of the system are anticlockwise, the rotating spring provides a clockwise reset torque $\kappa\theta$ and the moment of inertia $J_A\ddot{\theta}$, respectively. Using D'Alembert's principle, from the Figure 1(b) the free body is in dynamic equilibrium.

Hence, $J_A\ddot{\theta} + \kappa\theta + mgL\sin\theta = 0$,

$$\text{i.e.} \frac{J + mL^2}{L}\ddot{\theta} + \frac{\kappa}{L}\theta + mg\sin\theta = 0. \tag{10}$$

The most typical kind of dampening encountered throughout the introductory course is the viscous damping type. The damping force is proportional to the speed. We add viscous damping term $-2\delta\dot{\theta}$ to the (10), where δ is the damping coefficient. Then, the jet engine vibration equation is as follows:

$$\begin{aligned} \frac{J + mL^2}{L}\ddot{\theta} + \frac{\kappa}{L}\theta + mg\sin\theta = -2\delta\dot{\theta}, \\ \text{i.e.} \frac{J + mL^2}{L}\ddot{\theta} + 2\delta\dot{\theta} + \frac{\kappa}{L}\theta + mg\sin\theta = 0. \end{aligned} \tag{11}$$

Adding periodic external force $F\cos\omega t$ to the model, the model takes the following form:

$$\frac{J + mL^2}{L}\ddot{\theta} + 2\delta\dot{\theta} + \frac{\kappa}{L}\theta + mg\sin\theta - F\cos\omega t = 0. \tag{12}$$

Expanding $\sin\theta$ in terms of θ and ignoring the terms higher than θ^3 as θ is very small, we attain the nonlinear jet engine vibration equation of the system as follows:

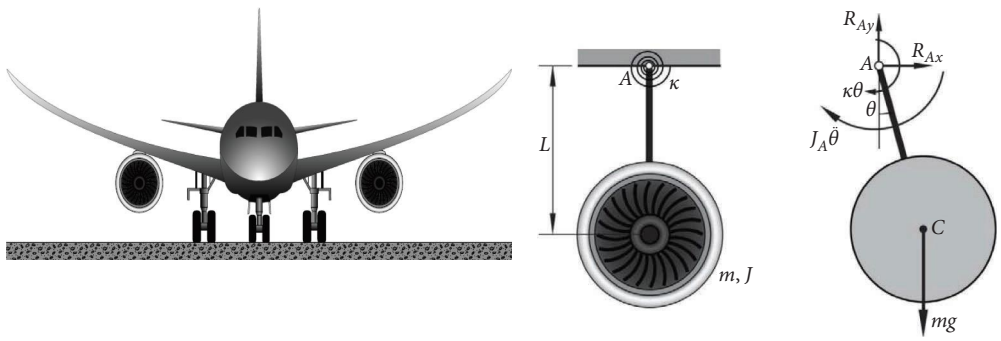

(a) (b)

Figure 1: The jet engine horizontal vibration model.

$$\frac{J+mL^2}{L}\ddot{\theta}+2\delta\dot{\theta}+\left(\frac{\kappa}{L}+mg\right)\theta-\frac{1}{6}mg\theta^3-F\cos\omega t=0. \quad (13)$$

4. Solution to the Problem

According to (4), the homotopy next to (13) is considered to be given by the following equation:

$$\frac{J+mL^2}{L}\ddot{\theta}+2\delta\dot{\theta}+\left(\frac{\kappa}{L}+mg\right)\theta-p\left(\frac{1}{6}mg\theta^3+F\cos\omega t\right)=0. \quad (14)$$

As a power series in p, consider the solution of (13)

$$\theta=\theta_0+p\theta_1+p^2\theta_2+\cdots\cdots. \quad (15)$$

Therefore, substituting (15) into (14) and setting the coefficient of each power of p to zero, the following set of differential equations can be obtained:

$$\begin{aligned} p^0&: \frac{J+mL^2}{L}\ddot{\theta}_0++2\delta\dot{\theta}_0+\left(\frac{\kappa}{L}+mg\right)\theta_0=0, && \theta_0(0)=a,\dot{\theta}_0(0)=0,\\ p^1&: \frac{J+mL^2}{L}\ddot{\theta}_1+2\delta\dot{\theta}_1+\left(\frac{\kappa}{L}+mg\right)\theta_1-\frac{1}{6}mg\theta_0{}^3-F\cos t\omega=0, && \theta_1(0)=0,\dot{\theta}_1(0)=0. \end{aligned} \quad (16)$$

Case 1. In the absence of the periodic external force and damping, that is $F=0\,N, \delta=0\,\mathrm{kgms}^{-1}$ and choosing $J=240\,\mathrm{kg}m^2, m=40\mathrm{kg}, L=2.7\,m, \kappa=4\,\mathrm{kg}m^2s^{-2}$, and $g=9.81\,\mathrm{ms}^{-2}$.

With the initial conditions $\theta_0(0)=a=0.1m$ and $\dot{\theta}_0(0)=0\mathrm{ms}^{-1}$.

For these values, the above two equations give the following:

$$\begin{aligned} \theta_0&=0.01\cos 1.41t,\\ \theta_1&=0.000005(\cos 1.41t-\cos 4.24t)+0.000088t\sin 1.41t. \end{aligned} \quad (17)$$

So, the approximate solution of (13) is

$$\begin{aligned} \theta=&\,0.100005\cos 1.41t-0.000005\cos 4.24t\\ &+0.000088t\sin 1.41t. \end{aligned} \quad (18)$$

Case 2. In the absence of the periodic external force, that is $F=0\,N$, and choosing $J=250\,\mathrm{kg}m^2, m=50\,\mathrm{kg}, L=2.5\,m, \delta=18\,\mathrm{kg}ms^{-1}, \kappa=5\,\mathrm{kg}m^2s^{-2}$, and $g=9.81\mathrm{ms}^{-2}$.

With the initial conditions: $\theta_0(0)=a=0.5\,m$ and $\dot{\theta}_0(0)=0\,\mathrm{ms}^{-1}$.

Consequently, the initial two solutions of (13) take the following structures:

$$\begin{aligned} \theta_0&=e^{-0.08t}(0.5\cos 1.48t+0.027076\sin 1.48t),\\ \theta_1&=-e^{-0.08t}(0.007171\cos 1.48t-0.07309\sin 1.48t)\\ &\quad+e^{-0.24t}(0.007804\cos 1.48t-0.071842\sin 1.48t\\ &\quad-0.000633\cos 4.43t-0.000157\sin 4.43t). \end{aligned} \quad (19)$$

Hence, the solution of (13) becomes

$$\begin{aligned} \theta=&\,e^{-0.08t}(+0.492829\cos 1.48t+0.100166\sin 1.48t)\\ &+e^{-0.24t}(0.007804\cos 1.48t-0.071842\sin 1.48t\\ &-0.000633\cos 4.43t-0.000157\sin 4.43t). \end{aligned} \quad (20)$$

Case 3. In the absence of the damping, that is $\delta=0\,\mathrm{kgms}^{-1}$ and choosing $J=220\,\mathrm{kgm}^2, m=45\,\mathrm{kg}, L=2\,m, \kappa=3.5\,\mathrm{kgm}^2s^{-2}, g=9.81\,\mathrm{ms}^{-2}, F=5\,N$, and $\omega=30^\circ$.

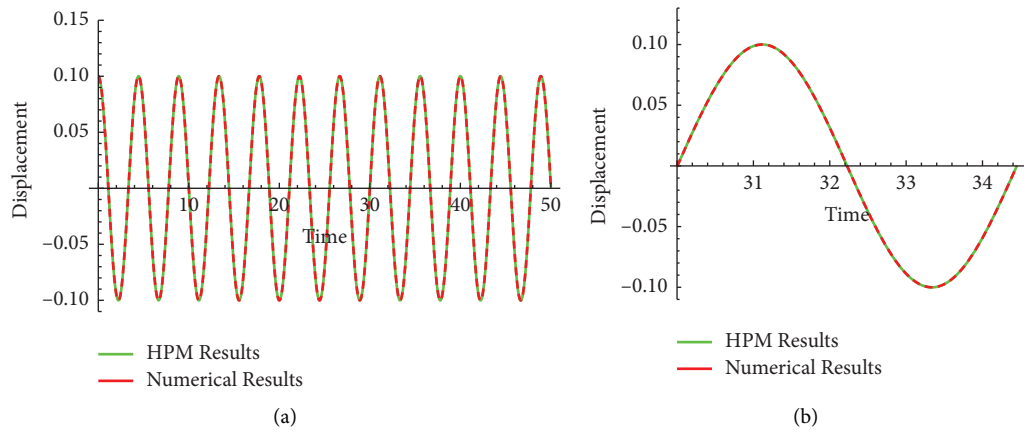

Figure 2: (a) The graphical representation of the nonlinear jet engine vibration system without damping and external driving force and (b) a complete period for Case 1.

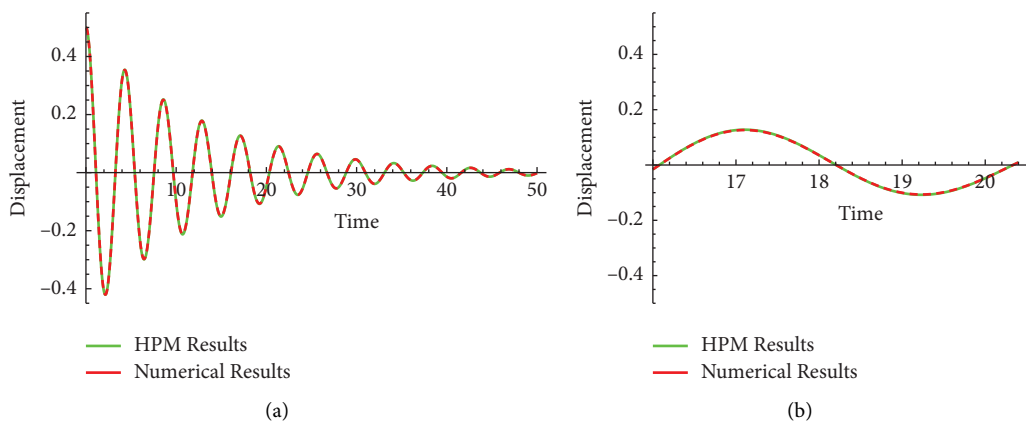

Figure 3: (a) The graphical representation of the nonlinear jet engine vibration system with damping and without external driving force and (b) a complete period for Case 2.

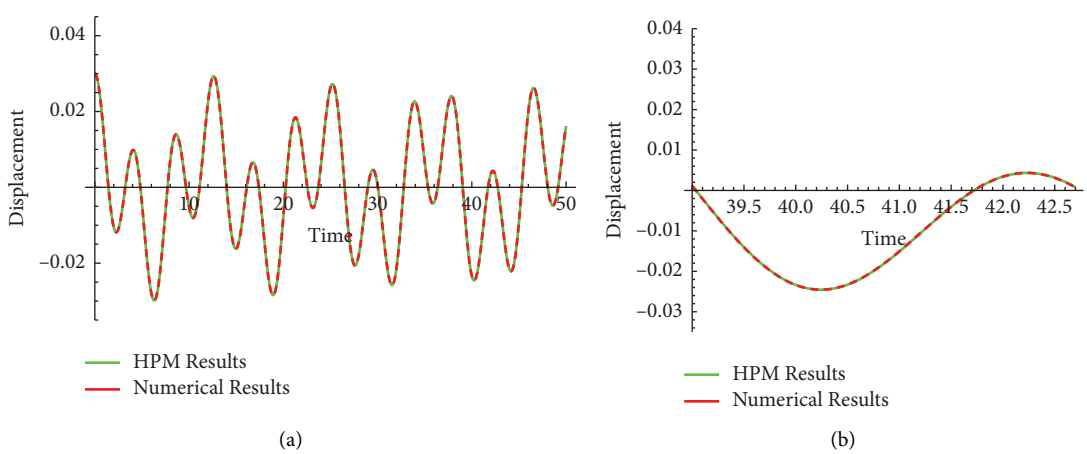

Figure 4: (a) The graphical representation of the nonlinear jet engine vibration system with external driving force and without damping and (b) a complete period for Case 3.

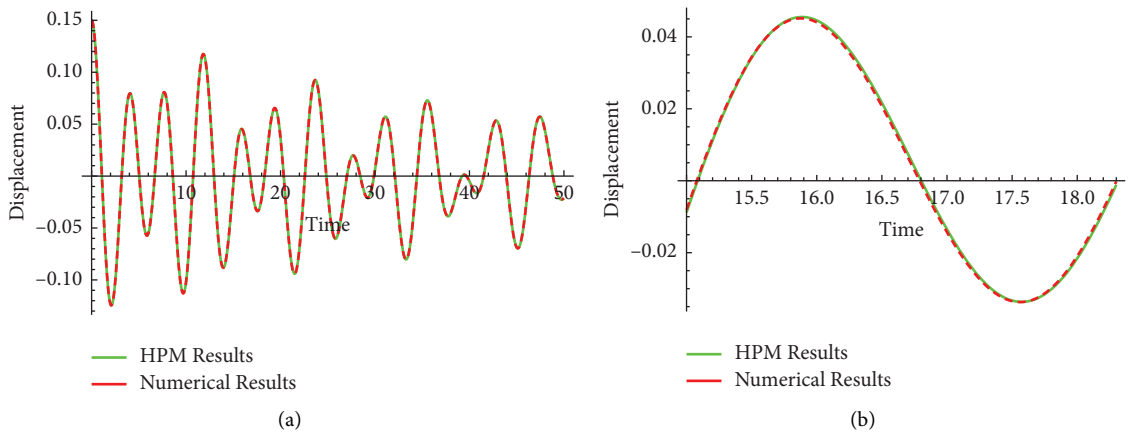

FIGURE 5: (a) The graphical representation of the nonlinear jet engine vibration system with both damping and external driving force and (b) a complete period for Case 4.

With the initial conditions, $\theta_0(0) = a = 0.03\,m$ and $\dot{\theta}_0(0) = 0\,\mathrm{ms}^{-1}$.

For the above values, the following are the first two components for (13):

$$\begin{aligned}\theta_0 &= 0.03\cos 1.49t,\\ \theta_1 &= 0.012874(\cos 0.52t - \cos 1.49t)\\ &\quad + 0.000003t\sin 1.49t.\end{aligned} \tag{21}$$

Hence, the solution of the (13) takes the following form:

$$\begin{aligned}\theta &= 0.017126\cos 1.49t + 0.012874\cos 0.52t\\ &\quad + 0.000003t\sin 1.49t.\end{aligned} \tag{22}$$

Case 4. In the presence of the periodic external force and damping, we choose $J = 200\,\mathrm{kgm}^2$, $m = 56\,\mathrm{kg}$, $L = 2.25\,m$, $\delta = 6\,\mathrm{kgms}^{-1}$, $\kappa = 3\,\mathrm{kgm}^2 s^{-2}$, $g = 9.81\,\mathrm{ms}^{-2}$, $F = 12\,N$, and $\omega = 60^\circ$.

With the initial conditions, $\theta_0(0) = a = 0.15\,m$ and $\dot{\theta}_0(0) = 0\,\mathrm{ms}^{-1}$.

Therefore, the first two solutions of (13) by the homotopy perturbation method are

$$\begin{aligned}\theta_0 &= e^{-0.03t}(0.15\cos 1.6t + 0.002617\sin 1.6t),\\ \theta_1 &= 0.03803\cos 1.05t + 0.001517\sin 1.05t - e^{-0.03t}(0.038223\cos 1.6t - 0.004386\sin 1.6t)\\ &\quad + e^{-0.08t}(0.00021\cos 1.6t - 0.006031\sin 1.6t - 0.000017\cos 4.8t - 0.000001\sin 4.8t).\end{aligned} \tag{23}$$

Thus, the solution of (13) given by the homotopy perturbation method is as follows:

$$\begin{aligned}\theta &= 0.03803\cos 1.05t + 0.001517\sin 1.05t + e^{-0.03t}(0.111777\cos 1.6t + 0.007003\sin 1.6t)\\ &\quad + e^{-0.08t}(0.00021\cos 1.6t - 0.006031\sin 1.6t - 0.000017\cos 4.8t - 0.000001\sin 4.8t).\end{aligned} \tag{24}$$

All the above solutions are shown in Figures 2–5 by comparing with the numerical solutions and also to show the accuracy of the results, we have magnified a complete period of each figure. Figures are given as follows:

5. Results and Discussion

The general solution has been found by successfully utilizing the HPM for undamped and damped cases in the absence and presence of external forces of the nonlinear model equation. To test the accuracy of the general solutions, we have graphically compared the solutions for all the cases with the numerical results for different sets of initial values. In order to show how strong the accurateness of the obtained solutions by both methods is, we have shown graphically a complete cycle of a special part of each figure. We have used the realistic values for damping constant, forcing constant, gravitational force, etc., to compare the solution curves with the curves of numerical results for the time period, $t = 0$ to $t = 50$. All these comparative graphical

representations have been displayed in Figures 2–5, which show nice agreement with the numerical results and strongly support the correctness of our outcomes.

6. Conclusion

The jet engine vibration (JEV) system's nonlinear ordinary differential equation has been effectively solved explicitly and approximately for a number of examples in this study using He's homotopy perturbation technique (HPM). For this system the HPM gives expected results corresponding to the numerical solutions obtained by "NDSolve" in Mathematica. This method requires less calculation, easier to use, accelerates convergence to the solution and all in all is very simple. According to this research, we can emphatically say that the HPM is actually a powerful analytical method for solving any type of nonlinear problems. We ensure that this method is appropriate and gives very accurate results.

Data Availability

No underlying data were collected or produced to support the findings of this study.

Conflicts of Interest

The authors declare that they have no conflicts of interest.

References

[1] J.-H. He, "A review on some new recently developed nonlinear analytical techniques," *International Journal of Nonlinear Sciences and Numerical Stimulation*, vol. 1, no. 1, pp. 51–70, 2000.

[2] A. H. Nayfeh, *Introduction to Perturbation Techniques*, John Wiley & Sons, Hoboken, NJ, USA, 2011.

[3] G. Biondini and G. Kovačič, "Inverse scattering transform for the focusing nonlinear Schrödinger equation with nonzero boundary conditions," *Journal of Mathematical Physics*, vol. 55, no. 3, Article ID 31506, 2014.

[4] M. H. M. Moussa and R. M. El Shikh, "Two applications of the homogeneous balance method for solving the generalized Hirota-Satsuma coupled KdV system with variable coefficients," *International Journal of Nonlinear Science*, vol. 7, no. 1, pp. 29–38, 2009.

[5] M. Alquran and R. Alhami, "Analysis of lumps, single-stripe, breather-wave, and two-wave solutions to the generalized perturbed-KdV equation by means of Hirota's bilinear method," *Nonlinear Dynamics*, vol. 109, no. 3, pp. 1985–1992, 2022.

[6] S. T. R. Rizvi, A. R. Seadawy, F. Ashraf, M. Younis, H. Iqbal, and D. Baleanu, "Lump and interaction solutions of a geophysical Korteweg–de Vries equation," *Results in Physics*, vol. 19, Article ID 103661, 2020.

[7] M. S. Rawashdeh and S. Maitama, "Solving PDEs using the natural decomposition method," *Nonlinear Studies*, vol. 23, p. 1, 2016.

[8] N. Anjum, J. H. He, Q. T. Ain, and D. Tian, "Li-He's modified homotopy perturbation method for doubly-clamped electrically actuated microbeams-based microelectromechanical system," *Facta Universitatis – Series: Mechanical Engineering*, vol. 19, no. 4, pp. 601–612, 2021.

[9] K. A. Gepreel, "Improved general mapping deformation method for nonlinear partial differential equations in mathematical physics," *Journal of Applied Mathematics*, vol. 2013, no. 2, Article ID 258396, 9 pages, 2013.

[10] M.. Rawashdeh, "Approximate solutions for coupled systems of nonlinear PDES using the reduced differential transform method," *Mathematical and Computational Applications*, vol. 19, no. 2, pp. 161–171, 2014.

[11] Ji-H. He and Y. O. El-Dib, "The enhanced homotopy perturbation method for axial vibration of strings," *Facta Universitatis – Series: Mechanical Engineering*, vol. 19, no. 4, pp. 735–750, 2021.

[12] A. A. Hamoud and K. P. Ghadle, "Modified Laplace decomposition method for fractional Volterra-Fredholm integro-differential equations," *Journal of Mathematical Modeling*, vol. 6, no. 1, pp. 91–104, 2018.

[13] Ji-H. He, "Variational iteration method—some recent results and new interpretations," *Journal of Computational and Applied Mathematics*, vol. 207, no. 1, pp. 3–17, 2007.

[14] D. D. Ganji, H. Tari, and M. B. Jooybari, "Variational iteration method and homotopy perturbation method for nonlinear evolution equations," *Computers & Mathematics with Applications*, vol. 54, no. 7-8, pp. 1018–1027, 2007.

[15] D.-H. Shou, "The homotopy perturbation method for nonlinear oscillators," *Computers & Mathematics with Applications*, vol. 58, no. 11-12, pp. 2456–2459, 2009.

[16] J.-H. He and Y. O. El-Dib, "Homotopy perturbation method with three expansions," *Journal of Mathematical Chemistry*, vol. 59, no. 4, pp. 1139–1150, 2021.

[17] J.-H. He, "Homotopy perturbation technique," *Computer Methods in Applied Mechanics and Engineering*, vol. 178, no. 3-4, pp. 257–262, 1999.

[18] J.-H. He, "The homotopy perturbation method for nonlinear oscillators with discontinuities," *Applied Mathematics and Computation*, vol. 151, no. 1, pp. 287–292, 2004.

[19] J.-H. He, "A coupling method of a homotopy technique and a perturbation technique for non-linear problems," *International Journal of Non-Linear Mechanics*, vol. 35, no. 1, pp. 37–43, 2000.

[20] D. D. Ganji and A. Rajabi, "Assessment of homotopy–perturbation and perturbation methods in heat radiation equations," *International Communications in Heat and Mass Transfer*, vol. 33, no. 3, pp. 391–400, 2006.

[21] D. D. Ganji and M. Rafei, "Solitary wave solutions for a generalized Hirota–Satsuma coupled KdV equation by homotopy perturbation method," *Physics Letters A*, vol. 356, no. 2, pp. 131–137, 2006.

[22] C.-H. He and Y. O. El-Dib, "A heuristic review on the homotopy perturbation method for non-conservative oscillators," *Journal of Low Frequency Noise, Vibration and Active Control*, vol. 41, no. 2, pp. 572–603, 2022.

[23] A. Sadighi and D. D. Ganji, "Exact solutions of Laplace equation by homotopy-perturbation and Adomian decomposition methods," *Physics Letters A*, vol. 367, no. 1-2, pp. 83–87, 2007.

[24] A. Panda, S. Santra, and J. Mohapatra, "Adomian decomposition and homotopy perturbation method for the solution of time fractional partial integro-differential equations," *Journal of Applied Mathematics and Computing*, vol. 68, no. 3, pp. 2065–2082, 2022.

[25] J.-H. He, "Application of homotopy perturbation method to nonlinear wave equations," *Chaos, Solitons & Fractals*, vol. 26, no. 3, pp. 695–700, 2005.

[26] A. Rajabi, D. D. Ganji, and H. Taherian, "Application of homotopy perturbation method in nonlinear heat conduction and convection equations," *Physics Letters A*, vol. 360, no. 4-5, pp. 570–573, 2007.

[27] D. D. Ganji, G. Afrouzi, H. Hosseinzadeh, and R. Talarposhti, "Application of homotopy-perturbation method to the second kind of nonlinear integral equations," *Physics Letters A*, vol. 371, no. 1-2, pp. 20–25, 2007.

[28] M. A. Alim, Pundra University of Science and Technology, M. A. Kawser, and M. M. Rahman, "Asymptotic solutions of coupled spring systems with cubic nonlinearity using homotopy perturbation method," *Annals of Pure and Applied Mathematics*, vol. 18, no. 1, pp. 99–112, 2018.

[29] M. Sinan, A. Ali, K. Shah, T. A. Assiri, and T. A. Nofal, "Stability analysis and optimal control of Covid-19 pandemic SEIQR fractional mathematical model with harmonic mean type incidence rate and treatment," *Results in Physics*, vol. 22, no. 2021, Article ID 103873, 2021.

[30] B. Raftari and A. Yildirim, "The application of homotopy perturbation method for MHD flows of UCM fluids above porous stretching sheets," *Computers & Mathematics with Applications*, vol. 59, no. 10, pp. 3328–3337, 2010.

[31] J.-H. He, "Comparison of homotopy perturbation method and homotopy analysis method," *Applied Mathematics and Computation*, vol. 156, no. 2, pp. 527–539, 2004.

[32] J.-H. He, "Homotopy perturbation method for solving boundary value problems," *Physics Letters A*, vol. 350, no. 1-2, pp. 87-88, 2006.

[33] J.-H. He, "A simple perturbation approach to Blasius equation," *Applied Mathematics and Computation*, vol. 140, no. 2-3, pp. 217–222, 2003.

[34] N. Anjum and J.-H. He, "Homotopy perturbation method for N/MEMS oscillators," *Mathematical Methods in the Applied Sciences*, 2020.

[35] J.-H. He, "Homotopy perturbation method: a new nonlinear analytical technique," *Applied Mathematics and Computation*, vol. 135, no. 1, pp. 73–79, 2003.

[36] W.-C. Xie, *Differential Equations for Engineers*, Cambridge University Press, Cambridge, UK, 2010.