Hindawi
Scientific Programming
Volume 2023, Article ID 8779142, 10 pages
https://doi.org/10.1155/2023/8779142

Research Article

Could Textual Features Offer Incremental Information to Financial Distress Prediction? Evidence from the Listed Firm in China

Liyuan Zheng,[1] **Pengqun Gao**,[1,2] **Lianghui Feng**,[1] **and Mengjiao Wang**[1]

[1]*School of Business, Hohai University, Nanjing, Jiangsu 211100, China*
[2]*Jiangsu Open University, Nanjing, Jiangsu 214257, China*

Correspondence should be addressed to Pengqun Gao; pqgao@hhu.edu.cn

Received 3 August 2022; Revised 24 December 2022; Accepted 23 January 2023; Published 22 February 2023

Academic Editor: Dongpo Xu

Both academia and industry believe that introducing textual features into a financial distress prediction model can improve its accuracy. However, the textual features introduced by the research are relatively singular and fail to reflect the overall situation of the text comprehensively and effectively. Based on the traditional Z-score financial indicators model, four textual features of MD&A are introduced, namely, sentiment tone, text readability, forward-looking depth, and performance self-attribution. Using logistic regression, BP neural network, and deep belief network, empirical research draws conclusions from listed companies in China. The results show that the financial distress prediction model of listed companies considering multitextual features can effectively improve the prediction accuracy, and deep belief network has the potential to perform better prediction.

1. Introduction

Listed companies in China face increasingly fierce competition, and failure to compete can lead to financial distress, even bankruptcy. Corporate financial distress causes losses to both economic development and investors [1]. Therefore, both government regulators and investors need to assess the future performance of firms in order to avoid or reduce losses on the basis of more complete, true, and accurate information [2]. However, it is difficult for them to make accurate judgments or reasonable and appropriate investment decisions based only on the numerical financial information disclosed by listed companies. It is becoming increasingly important for investors and regulators to derive effective information value from nonfinancial information [3]. Compared with other information sources such as media, news, and Twitter, corporate annual reports contain more effective information and are closely related to asset cost, market, and stock price fluctuations [4, 5]. Therefore, the use of corporate annual reports is still the main source of information for predicting corporate operating conditions, investment risks, etc. [6].

The progression from financial health to financial distress is a gradual deterioration process with clear signs [7]. It is believed that financial distress can be predicted by constructing indicators that can indicate whether financial distress will occur by applying statistical analysis or machine learning techniques [8]. In terms of constructing predictive indicators, there has been an evolution from a single dimension of financial indicators to a multidimensional indicator system that includes the firm dimension [9, 10], the market dimension [11, 12], the macroeconomic dimension [13, 14], and so on. However, more indicators in the system do not always lead to better results because accounting information in financial reports reflects the impact of the market, macroeconomics, corporate governance, and other factors on companies [15]. Therefore, some studies rely on textual information, which occupies a large space in companies' annual reports, to obtain additional information. However, these articles mainly focus on a single textual feature, such as sentiment tone, text readability, and so on, ignoring the fact that textual information displays multiple features simultaneously and that these features exert

influence as a whole [16, 17]. For example, Zhou et al. found that the effect of sentiment tone depends on the veracity of the text information [18]. Meanwhile, studies place most emphasis on text and ignore the effect of numerical financial indicators on prediction. For example, Mayew et al. only considered the effect of the views of the management team and the sentiment tone of the MD&A [19]. Thus, there is an important gap in the corporate financial distress prediction literature regarding the integration of financial and textual dimensions in predicting corporate distress [20]. The research question is whether text can provide useful incremental information beyond numerical financial measures in predicting distress, i.e., whether predictive accuracy may be improved if textual features are considered simultaneously.

The application of prediction techniques also has a significant impact on the accuracy of predicting financial distress [7]. Ding and Lv [21] found that the prediction accuracy of a model built on the same data was quite different when different prediction techniques were applied. Scholars first use multivariate discriminant and logistic regression methods and then resort to neural network algorithms, support vector machines, expert systems, genetic algorithms, and other artificial intelligence methods. Among these methods, technologies based on neural networks have better predictive performance [22], especially deep learning methods [23]. There are three basic algorithmic structures in deep learning: the deep belief network (DBN), the convolutional neural network (CNN), and the deep neural network (DNN). DNN and CNN have already been introduced in corporate financial distress prediction and have shown good prediction performance [24, 25]. Recently, deep belief network has received attention in prediction because it combines the characteristics of deep learning and feature learning and is able to quickly analyse a large amount of data [26]. For example, Haris et al. [27] improved the prediction accuracy of the remaining life of a supercapacitor using DBN technology. However, deep belief networks have not yet been used to predict financial distress. Therefore, the second question is whether the deep belief networks could perform better.

Therefore, this article first combines the four textual features that have received the most attention in the literature into the Z-score model, which is a classic and fundamental financial distress model, to test whether textual features could provide additional information other than numerical indicators. Second, this article applies 3 prediction technologies, namely logistic regression, BP neural network, and deep belief network, to test whether the introduction of textual features could improve the prediction accuracy. The contribution of this study is threefold. First, considering that there is a critical gap in the literature on predicting corporate financial distress regarding the integration of financial and textual dimensions to predict corporate distress, this study combining textual features with classical numerical financial indicators could make a little contribution to filling the gap. Second, most of the literature that combines textual features and numerical financial indicators only focuses on a single textual feature. However, a single textual feature cannot correctly represent all the textual features used by management teams, and a single textual feature may also have different effects under the influence of other textual features. This study considers four textual features that have been frequently tested in the literature and could fill the gap left by focusing on a single textual feature. Third, some studies have proved that deep belief network technology could achieve better prediction accuracy than BP neural network, but few financial distress prediction literature have applied deep belief network. This study, which tests whether a deep belief network is more suitable for predicting financial distress, is one of the studies that try to introduce new technologies into financial forecasting and explore more application scenarios for these new technologies.

2. Literature Review

Reviewing the literature on predicting corporate financial distress, we find that financial indicators have always been the main explanatory variables [28]. Initially, studies used a single financial indicator and then gradually expanded to less than 10 financial indicators. For example, Casey and Bartczak used only the operating cash flow ratio to predict financial distress [29], and Beaver identified the power of the ratio of cash flow to total debt to predict financial distress [30]. Altman then developed the classic Z-score model, which includes working capital/total assets, retained earnings/total assets, earnings before interest and taxes/total assets, market value, equity/book value of total debt, and sales/total assets [31]. Mselmi et al. [14] and Ohlson [32] used 6 and 9 indicators, respectively.

In recent years, the prediction model has become more complex. The number of financial indicators gradually increases from 13 used by Xiao et al. [33] to 32 used by Chen et al. [34]. And the prediction model expands from a single financial dimension to a corporate governance dimension [9, 10], a market dimension [11, 12], and a macroeconomic dimension [13, 14]. Faced with an increasing number of indicators, Rose and Giroux compared the means of one hundred and thirty indicators commonly used in research and found that only thirty-four indicators were predictive [35]. This suggests that the number of indicators is not a necessity for predicting financial distress because the selection of these indicators is not rigorous and the risk information contained in different variables may overlap or even conflict [15]. In addition, accounting information in financial reports has reflected the impact of market, macroeconomic, corporate governance, and other factors on firms [15]. Bhagat and Bolton [36] only used the ratio of EBIT to total assets, the ratio of financial expenses to total assets, and the ratio of retained earnings to total assets to build a highly accurate prediction model. Therefore, some scholars turn to other sources of information, such as the text that occupies a large space in company annual reports, to find additional information [37].

Among large text information, studies believe that corporate annual reports contain more effective information and are closely related to asset cost, market, and stock price

fluctuations [4, 5], compared with other information sources such as media news and Twitter. MD&A is the most important part of corporate annual reports because it reflects the opinions and attitudes of managers towards further development. Mayew et al. found that the view on the company's going concern of the management team and the sentiment tone of MD&A can predict the company's going concern status [19], indicating that MD&A sentiment tones can send messages to the market [38]. Caserio et al. found managers in financially troubled companies tend to use more positive words and future-oriented tones for impression management than managers in healthy companies [39]. Liu and Chen confirmed that the sentiment tone improves the accuracy of the credit risk warning model [40]. Chen further confirmed that sentiment tone is an important supplement to numerical accounting information and found that management negative tones have a higher information value than net tones [41]. Most of these studies considered only a single textual feature, particularly sentiment tone. However, the single textual features examined in previous articles cannot correctly demonstrate all textual features applied by management teams [16, 17], and a single text feature may also have different effects under the influence of other text features. Zhou et al. found that the effect of the sentiment tone depends on the truthfulness of the textual information [18]. Although Jiang and Feng considered several textual features [17], their work failed to consider the effect of sentiment tones on the prediction accuracy of the corporate financial distress model.

After reviewing the related literature, we find that some studies try to build a more complex numerical indicator system containing financial, market, governance, and macroeconomic dimensions, and some studies focus only on the effect of textual information. Thus, few studies have tried to incorporate financial and text dimensions to predict corporate distress, leaving a critical gap in the corporate financial distress prediction literature regarding the integration of financial and text dimensions to predict corporate distress [20].

3. Establishment of the Corporate Distress Prediction Model

3.1. Selection of Financial Indicators. The selection of financial indicators is important in predicting financial distress. The scientificity, rationality, and appropriateness of financial indicators directly affect the prediction effect [29]. However, there are no unified financial indicators to date [37].

Although financial indicators are becoming increasingly complex, a better prediction effect is not necessary. The selection of these indicators is not rigorous, and the risk information contained in different variables may overlap or even conflict with each other [15]. The selection also has a certain degree of subjectivity, and its applicability to other research backgrounds is insufficient [8].

Among numerous financial indicators, the Z-score model has been proven to have a relatively stable prediction performance [42, 43]. Since the purpose of this study is not to build rigorous financial indicators, the widely used Z-score model was adopted. The Z-score model is presented in Table 1.

3.2. Selection of Textual Features. As for the textual features of MD&A, most scholars currently only study them from a single perspective. For example, scholars such as Liu and Chen [40], Chen [41], and Zhao et al. [44] simply considered the role of sentiment tone in the financial distress prediction model, whereas scholars such as Zhang et al. [45], Kang et al. [46], Li [47], and Wang et al. [48] measure organizational features of text, such as readability and complexity. Other studies, such as those by Sun et al. [49] and Yao and Yang [50], studied the effects of self-attributes. However, these studies do not reflect the overall state of textual features more comprehensively and effectively because management does not adopt a single text feature in isolation [17], and a single textual feature may have different effects under the influence of other textual features [18]. Although Jiang and Feng [17] considered several textual features, their indicators failed to incorporate the important features of sentiment tone, nor did they reflect the effectiveness of the combination of textual features and financial indicators in predicting financial distress.

Through the literature, this study finds that sentiment tone, performance self-attribution, forward-looking depth, and readability are the most studied. At present, none considers the collective effect of the above textual features on corporate financial distress prediction. Therefore, this study introduces them to the traditional Z-score financial indicators to test whether these textual features could significantly contribute to financial distress prediction. The measurement of each textual feature is presented in Table 2.

4. Empirical Study

4.1. Measurement of Textual Features. Measuring sentiment tone, this paper firstly uses the "Chinese Emotion Vocabulary Ontology Library," processed and labelled by Dalian University of Technology, as the thesaurus for textual emotion word recognition in the MD&A. Second, this study counted the frequency of emotional words in MD&A after pretreatment. The value is positive if the emotional words measure the positive emotion of MD&A and negative if the emotional words measure the negative emotion. Third, positive and negative emotion values were added after standardization. The larger the value, the more positive the emotion of the text.

To measure performance self-attribution, this study first identified attribution sentences. Some words in Chinese can express a causal relationship in the text, just like "because," "thus," "cause," and so on. Using these words, the attribution sentences were identified. Second, the attribution sentences were divided into four categories based on performance and attribution: UI (performance increase and internal attribution), DE (performance decline and external attribution), UE (performance increase and external attribution), and DI (performance decline and internal attribution). The number

Table 1: Definition of each indicator in the z-score model.

Code	Indicator	Measurement
X1	Capital accumulation	(Surplus reserve + undistributed profit)/total assets
X2	Liquidity	(Current assets − current liabilities)/total assets
X3	Ability to withstand market shocks	Owner's equity/total liabilities
X4	Profitability	Operating profit/total assets
X5	Capital accumulation	Operating income/total assets

Table 2: Definition and measurement of each text feature.

Textual feature	Measurement	Reference
Sentiment tones (T_{st})	(Positive word frequency − negative word frequency)/total word frequency	[40, 41]
Performance self-attribution (T_{sa})	SSAB = (IP − EP + EN − IN)/(IP + EP + EN + IN)	[17, 49, 50]
Forward-looking depth (T_{de})	Frequency of sentences containing adverb	[17]
Readability (T_{re})	MD&A total word count + average sentence length + the density of adjunctive conjunction	[47]

of sentences in each category was counted. Third, we calculated the performance self-attribution index based on the following formula: SSAB = (IP − EP + EN − IN)/(IP + EP + EN + IN). The larger the SSAB value, the stronger the company's tendency to attribute itself to an increase in performance.

To measure forward-looking depth, this study used the frequency of sentences containing adverbs of degree in MD&A texts to quantify the prospectiveness of MD&A information disclosure.

To measure the readability of text information, this study considers three aspects: total MD&A words, average sentence length, and density of adjunctive conjunctions. First, the longer the information is disclosed, the higher the cost of information processing to understand and obtain effective information. Therefore, the more words and length of MD&A, the more difficult it is for text information to be understood. Meanwhile, the increased length of MD&A is the simplest and most direct way for management to hide important information from annual reports. Second, punctuation marks separate language expressions. In Chinese, the optimal length of a sentence with a complete independent expression function is 7–12 characters, and exceeding this optimal length will cause obstacles to information acquisition. Third, the more complex the logical structure of text information, the more difficult it is for information receivers to obtain and understand the information, and the higher the cost of information processing. This study chose the number of adjunctive conjunctions per 100 words to measure the density of adjunctive conjunctions. The results of the above three variables were added after standardization to measure readability. The larger the value, the lower the text readability.

4.2. Selection of Prediction Methods

4.2.1. Logistic Regression. Logistic regression is a method of solving dichotomies to estimate the likelihood of something. Let the explained variable Y represent whether a listed company in the experimental sample data is in financial trouble; then, Y is a binary variable with a value of 1 or 0. The values of Y are shown below:

Assuming that the probability of a listed company being trapped in financial distress is P, the probability of the company's financial health is $1 - P$. Probability P is affected by the value of X_i, which is a financial distress prediction indicator. β_i is the coefficient of X_i and can be used to explain the relationship between each financial prediction indicator and the financial distress of the company. To avoid the limitation that the upper limit of the dependent variable must be less than 1, a logit expression is constructed by a logarithmic transformation. Based on the above assumptions, the logit model is constructed as follows:

$$In\left(\frac{P_i}{1-P_i}\right) = \alpha + \sum_{i=1}^{n} \beta_i X_i. \quad (1)$$

4.2.2. BP Neural Network. The back propagation (BP) neural network is based on the error back propagation algorithm, and it does not need to determine in advance the mapping relationship between input and output data and their mathematical equations to find the relationship between data. Based on the gradient descent method, the BP neural network minimizes the mean square error between the final real output value and the given output value by mining the relationship between the data so that the real output value can be closest to the given output value.

This study sets the financial distress prediction indicator data as the input and whether the company was in financial distress as the output. Applying the Python version of the BP neural network, we set the number of nodes in the input layer to 10 and the number of nodes in the output layer to 1. After preprocessing and inputting the training sample data, we set the network iteration time to 10000 times and set the learning rate LR to 0.01. After training, the test set was used as the input to obtain the predicted results of this study.

4.2.3. Deep Belief Network. Deep belief networks (DBNs) are neural network models with several hidden layers. The DBN learning process is divided into two steps. One is

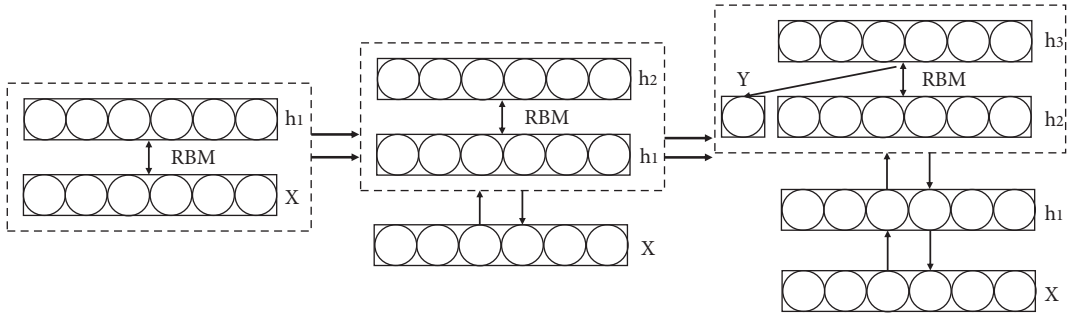

Figure 1: Deep belief networks structure diagram.

unsupervised learning, which extracts input information layer by layer, and the second is supervised learning, which fine-tunes the entire network by setting fixed tags. The DBN reduces the difficulty in determining the parameters of multiple hidden layers in a deep architecture.

The structure of the DBN, which has a deep architecture with three hidden layers, is shown in Figure 1. X represents the input data of the model, and Y represents the tag corresponding to X. Based on the restricted Boltzmann machine (RBM) model, DBN pairs the adjacent network layers, uses the input layer to determine the parameters between the two layers, and then builds the final output layer. Second, greedy and unsupervised learning are used to train the model layer by layer, which can combine the original features of the network model into more compact high-level features. Finally, strategy optimization of the global gradient descent for the entire deep architecture was carried out using the contrast-wake sleep method.

In this paper, an 8-layer RBM was used to train the DBN layer by layer from bottom to top, and Softmax was used as a classifier to train the DBN with preprocessed prediction indicator values and financial distress outcome variables. A weight file that reflects the relationship between the two is obtained. This study used it to test the test set, and the prediction results were obtained.

4.3. Sample Selection. In December 2007, the China Securities Regulatory Commission (CSRC) formulated and issued documents to regulate the contents and methods of information disclosure of listed companies in order to protect the legitimate rights and interests of investors. It is clearly stipulated in the document that MD&A in the report of the board of directors should focus on analyzing matters and factors that are difficult to reflect in the financial information and have a significant impact on the company's future development, operation, and financial conditions. To ensure the quality of the contents discussed and analyzed by the management, 2010 was selected as the starting time to obtain MD&A data. Therefore, this paper selects China's A-share listed companies identified as "ST" for the first time from 2012 to 2021 and then excludes companies in the financial industry and companies marked ST for reasons other than abnormal financial conditions. A total of 325 companies were selected each year, as shown in Figure 2.

According to the industry classification of China's national economy, the sample of 325 companies in financial distress includes 14 categories, as shown in Figure 3. In the sample data, the number of manufacturing (C) ST companies was the highest, with 228 companies, accounting for 69.30%. The accommodation and catering industry (I) and real estate industry (K) each have 16 ST companies, accounting for 4.86% of the sample. The third is transportation, storage, and postal services (F), with 13 ST companies accounting for 3.95%. The fourth is the mining industry (B), with 11 ST companies accounting for 3.34%. The number of ST companies in other industries was less than 10, accounting for 13.37%. This is consistent with the a-share industry structure of China's listed companies.

Since the annual report of the listed company in China is prepared within 4 months from the end of the fiscal year (T-1), the publication of the T-1 annual report of the listed company and whether it is specially treated in T year occur simultaneously. Meanwhile, an enterprise will be specially treated because of two consecutive years of negative net profit, so when the enterprise first appeared, the negative net profit was the time to pay attention to it. If a business maintains a positive net profit, there is no need to worry much about when it turns into a loss. Thus, this study refers to previous studies [40, 41, 49] and selects the financial indicators and MD&A of the second year before the year marked ST of listed companies as the dataset. That is, the year marked ST is recorded as T year, and the data for T-2 years are selected. At the same time, the ratio of the financial distress sample to the financial nondistress sample is selected at 1 : 1 and 1 : 2, respectively. The matching sample was selected from non-ST companies in the same industry as ST companies and with similar assets.

5. Empirical Results and Analysis

In order to clarify the role of textual features in financial distress prediction, the empirical analysis of this paper mainly adopts the out-of-sample prediction method to test, that is, the ST company and its corresponding paired samples from 2012 to 2019 are selected as the training set for judgment and paired samples from 2020 to 2021 as the test set. The empirical analysis is divided into two steps. First, the modeling prediction is only based on the financial ratio variable; second, textual feature variables are added for the modeling prediction. The role of textual

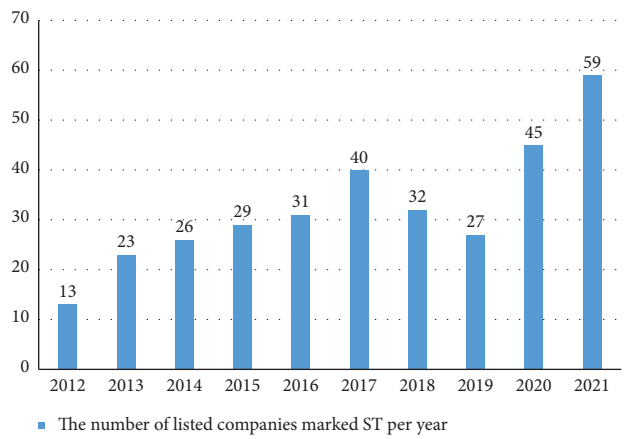

Figure 2: The number of listed companies marked ST per year.

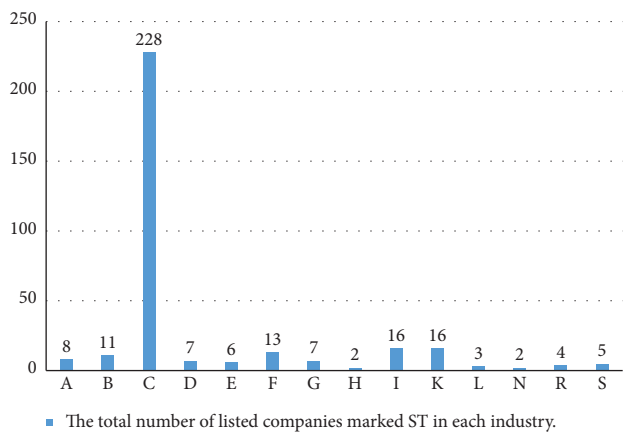

Figure 3: Industry distribution of sample companies in financial distress.

feature variables in financial distress prediction is judged by comparing the changes in model prediction ability brought by the addition of textual feature variables.

5.1. Descriptive Statistical Analysis Results of Each Major Variable. First, a multicollinearity test should be carried out among the explanatory variables in the model to avoid confusion in the regression results and further affect the analysis results of the model. A multicollinearity test was conducted on the explanatory variables of the financial indicators with and without the textual features selected in this study. The statistical results showed that the VIF values of all variables were low; therefore, the multicollinearity problem could be ignored, as shown in Table 3.

Second, the nonparametric Wilcoxon Mann–Whitney test was used to test whether there was a significant difference between the samples of financially distressed firms and those of normal firms, as shown in Table 4. Variables all significantly distinguish between financially distressed and normal firms, indicating that the textual features selected in this study really could add incremental information to predict financial distress.

5.2. Results Based on Logistic Regression. Table 5 shows the out-of-sample prediction results after the financial distress prediction model is constructed by the logistic regression method. When the textual features were added, the prediction accuracy improved at a ratio of 1 : 1, the first type of error was reduced, and the AUC was significantly improved. When the sample ratio was 1 : 2, the addition of textual features improved the accuracy and AUC, reduced the first type of error, and slightly improved the overall accuracy and AUC. It can be seen that when the logistic regression modeling is adopted, the textual features can provide certain incremental information to improve the fit degree and prediction ability of the financial distress prediction model, but the effect will be weakened after the expansion of the sample proportion.

5.3. Results Based on the BP Neural Network. Table 6 shows the out-of-sample prediction results of the financial distress prediction model constructed by the BP neural network. When the sample ratio is 1 : 1, the addition of textual features improves the overall accuracy and significantly reduces the first and second errors. The AUC has also improved to a certain extent. When the sample ratio was 1 : 2, the addition of textual features improved the overall accuracy; the first type of error was significantly reduced, the second was slightly reduced, and the AUC was slightly increased.

5.4. Results Based on the Deep Belief Network. Table 7 shows the out-of-sample prediction results of the financial distress prediction model established by the deep belief network. When the sample ratio is 1 : 1, the addition of textual features improves the overall accuracy to some extent, the first type of error is significantly reduced, and the AUC is slightly improved. When the sample ratio is 1 : 2, the addition of textual features improves the overall accuracy, which significantly reduces the first type of error and improves AUC.

6. Discussion

At present, there are many related studies on financial distress prediction for listed companies. However, the most relevant research focuses on the influence of different financial indicators of listed companies on financial distress prediction. With the development of natural language processing and other technologies, the textual features of MD&A have received increasing attention and are widely used in financial prediction. This study focuses on the effect of multi-textual features in financial distress prediction. Financial indicators only and with textual features are used for prediction by logistic regression, BP neural network, and DBN at 1 : 1 and 1 : 2, respectively. The main results are as follows:

First, the introduction of textual features is beneficial for improving the prediction of the financial distress of listed companies. This conclusion is valid for the two proportions of paired samples selected in this paper and is valid under the three modeling methods, indicating that the textual features of MD&A do have incremental information to predict the

Table 3: Multicollinearity statistical results.

Variables		Collinearity statistics	
		Tolerance	VIF
Logistic regression with only financial indicators	X_1	0.218	4.573
	X_2	0.757	1.322
	X_3	0.215	4.641
	X_4	0.930	1.074
	X_5	0.838	1.192
Logistic regression with both financial indicators and text features	T_{st}	0.163	6.153
	T_{re}	0.674	2.196
	T_{de}	0.490	2.040
	T_{sa}	0.130	7.705
	X_1	0.216	4.631
	X_2	0.754	1.327
	X_3	0.213	4.685
	X_4	0.915	1.093
	X_5	0.836	1.196

Table 4: Descriptive statistics and Wilcoxon Mann–Whitney test.

Variable	Mean	Standard deviation	Non-ST mean	ST mean	Wilcoxon Mann–Whitney test
X_1	−12.33	60.21	191.22	87.7	−10.727***
X_2	1.978	16.865	159.57	119.44	−4.164***
X_3	2.3601	3.334	169.45	109.55	−6.211***
X_4	77.97	1845,21	189.32	90.22	−10.22***
X_5	50.786	1974.34	174.28	138.03	−7.356***
T_{st}	0.673	0.069	0.703	0.672	−5.44***
T_{re}	0.375	0.092	0.351	0.423	−7.573***
T_{de}	0.075	0.065	0.092	0.04	−5.517***
T_{sa}	0.26	0.184	0.298	0.153	−7.537***

Table 5: Logistic regression predicted results.

Sample ratio	Variables	AUC	First type of errors	second type of errors	Accuracy
1 : 1	Only financial indicators	90.244	14.634	14.634	85.366
	Both financial and textual	92.683	12.159	14.634	87.805
1 : 2	Only financial indicators	92.597	24.39	8.537	86.179
	Both financial and textual	92.802	21.951	8.537	86.992

Table 6: BP neural network predicted results.

Sample ratio	Variables	AUC	First type of errors	second type of errors	Accuracy
1 : 1	Only financial indicators	88.192	19.512	17.037	81.707
	Both financial and textual	90.274	17.073	14.634	84.146
1 : 2	Only financial indicators	91.315	19.512	19.512	80.488
	Both financial and textual	92.623	13.415	17.037	86.179

future development of firms and that the qualitative text content is an effective supplement to the quantitative financial data.

Second, DBN has the potential to perform better than logistic regression and the BP neural network. Despite the results showing that logistic regression performs best when paired samples are at 1 : 1 ratio, DBN turns out to be better when paired samples are at 1 : 2 ratio under the circumstance of adding textual features. Considering that the ratio is far smaller than 1 : 2 in the real world, we suppose that the DBN

Table 7: Deep belief network predicted results.

Sample ratio	Variables	AUC	First type of errors	second type of errors	Accuracy
1 : 1	Only financial indicators	91.017	17.037	17.037	82.927
	Both financial and textual	92.910	12.195	17.037	85.366
1 : 2	Only financial indicators	90.482	19.512	12.195	84.146
	Both financial and textual	93.337	15.854	12.195	87.682

has the potential to perform better than logistic regression and the BP neural network if they are applied in the real world to predict financial distress.

Our research has three contributions. First, considering there is a critical gap in the corporate financial distress prediction literature regarding the integration of financial and textual dimensions to predict corporate distress, this study combining textual features with classical numerical financial indicators could do little contribution to fill in the gap. Second, most literature combining textual features and numerical financial indicators only focuses on a single textual feature. But a single textual feature cannot correctly demonstrate all textual features applied by management teams, and a single textual feature may also have different effects under the influence of other textual features. This study considers four textual features that are frequently tested in the literature and could fill the gap created by focusing on a single textual feature. Third, this paper introduces the deep belief network into financial distress prediction literature and shows its ability in financial distress prediction.

For practitioners, our research also has implications. Many practitioners emphasize too much on financial indicators. However, these indicators only reflect past information and have limited information value for future prediction. Our research shows that the text of the MD&A could offer useful incremental information and can improve prediction accuracy when combined with financial indicators. Investors could reduce their losses if they are able to deal with assets that have a high probability of being ST in the future. Second, our research shows that the application of prediction technology really impacts prediction accuracy. Despite the fact that logistic regression has its advantage in easy manipulation, DBN has a higher potential to be more suitable because the accuracy of logistic regression is declining, whereas the accuracy of DBN is increasing with the decreasing paired ratio.

7. Limitation and Future Research

Although this study finds that financial indicators with multitextual features can improve the accuracy of financial distress prediction, especially when DBN technology is applied, there are still some problems in this study that need to be improved and perfected. First, in the selection of financial indicators, this study used only the Z-score model for financial distress prediction and did not include more financial indicators. In the future, we will select more rigorous financial indicators with better prediction effects. Second, this study only considers MD&A as the text feature extraction source. Liu and Chen [40] mentioned that the role of public text information, such as news reports and comments on professional media, and interaction information between social media and online forums should also be considered in predicting financial distress. Matin et al.'s research [51] also shows that, in terms of the textual information related to the financial situation of enterprises, the textual information disclosed by management does not contribute significantly to the prediction of the financial distress of enterprises compared with auditors' reports. Therefore, when constructing multitextual features in the future, we can consider multisource text information for analysis. Third, we simultaneously add textual features into the prediction model and ignore the margin effect of a single textual feature. The underlying hypothesis in this study is that the accuracy would increase with the increase of textual features added to the prediction maybe not suitable. The addition of textual features may also conform to the marginal diminishing effect, and if the number of textual features added exceeds the threshold, the continuous addition of textual features may be counterproductive. Finally, this study mainly selects Chinese A-share listed companies that were identified as "ST" for the first time from 2011 to 2020 as the sample of companies in financial distress and makes a 1 : 1 and 1 : 2 match between healthy companies. However, in the actual securities market, listed companies will also repeatedly experience financial difficulties, and this study fails to consider this dynamic nature.

Data Availability

The data used to support the findings of this study are available from the corresponding author upon request.

Conflicts of Interest

The authors declare that they have no conflicts of interest.

Authors' Contributions

Liyuan Zheng and Lianghui Feng conceived the idea of the study. Liyuan Zheng and Pengqun Gao analyzed the data. Pengqun Gao, Lianghui Feng, and Mengjiao Wang interpreted the results. Liyuan Zheng and Pengqun Gao wrote the paper. All authors discussed the results and revised the manuscript.

Acknowledgments

This work was supported in part by the National Natural Science Foundation of China (Grant no. 71974053) and in part by the Major Program of the National Social Natural Science Foundation of China (Grant no. 19ZDA084).

References

[1] J. N. Inekwe, Y. Jin, and M. R. Valenzuela, "The effects of financial distress: evidence from US GDP growth," *Economic Modelling*, vol. 72, pp. 8–21, 2018.

[2] R. Cole, S. Johan, and D. Schweizer, "Corporate failures: declines, collapses, and scandals," *Journal of Corporate Finance*, vol. 67, Article ID 101872, 2021.

[3] C. J. Cole and C. L. Jones, "The usefulness of MD&A disclosures in the retail industry," *Journal of Accounting, Auditing and Finance*, vol. 19, no. 4, pp. 361–388, 2004.

[4] S. P. Kothari, X. Li, and J. E. Short, "The effect of disclosures by management, analysts, and business press on cost of capital, return volatility, and analyst forecasts: a study using content analysis," *The Accounting Review*, vol. 84, no. 5, pp. 1639–1670, 2009.

[5] Q. B. Meng, J. H. Yang, and B. Lu, "The information content of management discussion and analysis and stock price crash risk: based on text vectorization method," *China Industrial Economics*, vol. 12, pp. 132–150, 2017.

[6] W. H. Beaver, "Financial statement analysis and the prediction of financial distress," *Foundations and Trends in Accounting*, vol. 5, no. 2, pp. 99–173, 2010.

[7] C. F. Tsai, K. L. Sue, Y. H. Hu, and A. Chiu, "Combining feature selection, instance selection, and ensemble classification techniques for improved financial distress prediction," *Journal of Business Research*, vol. 130, pp. 200–209, 2021.

[8] J. Sun, H. Li, Q. H. Huang, and K. Y. He, "Predicting financial distress and corporate failure: a review from the state-of-the-art definitions, modeling, sampling, and featuring approaches," *Knowledge-Based Systems*, vol. 57, pp. 41–56, 2014.

[9] D. Liang, C. F. Tsai, H. Y. R. Lu, and L. S. Chang, "Combining corporate governance indicators with stacking ensembles for financial distress prediction," *Journal of Business Research*, vol. 120, pp. 137–146, 2020.

[10] W. S. Chen and Y. K. Du, "Using neural networks and data mining techniques for the financial distress prediction model," *Expert Systems with Applications*, vol. 36, no. 2, pp. 4075–4086, 2009.

[11] B. Pham Vo Ninh, T. Do Thanh, and D. Vo Hong, "Financial distress and bankruptcy prediction: an appropriate model for listed firms in Vietnam," *Economic Systems*, vol. 42, no. 4, pp. 616–624, 2018.

[12] M. A. ElBannan, "On the prediction of financial distress in emerging markets: what matters more? Empirical evidence from Arab spring countries," *Emerging Markets Review*, vol. 47, Article ID 100806, 2021.

[13] B. Figlioli and F. G. Lima, "A proposed corporate distress and recovery prediction score based on financial and economic components," *Expert Systems with Applications*, vol. 197, Article ID 116726, 2022.

[14] N. Mselmi, A. Lahiani, and T. Hamza, "Financial distress prediction: the case of French small and medium-sized firms," *International Review of Financial Analysis*, vol. 50, pp. 67–80, 2017.

[15] J. C. Zhang and D. W. Wang, "Financial distress: theoretical definition and analysis," *Collected Essays on Finance and Economics*, vol. 267, no. 12, pp. 61–69, 2020.

[16] Y. B. Qian, "A critical genre analysis of MD&A discourse in corporate annual reports," *Discourse and Communication*, vol. 14, no. 4, pp. 424–437, 2020.

[17] Y. H. Jiang and C. J. Feng, "Linguistic features of MD&A, management expection and the future financial performance: empirical evidence from the growth enterprise market in China," *China Soft Science*, vol. 11, pp. 115–130, 2014.

[18] B. Zhou, C. Zhang, and Q. S. Zeng, "Annual report's tone and stock crash risk: evidence from China A-share companies," *China Journal of Accounting Studies*, vol. 11, pp. 41–48, 2019.

[19] W. J. Mayew, M. Sethuraman, and M. Venkatachalam, "MD&A disclosure and the firm's ability to continue as a going concern," *The Accounting Review*, vol. 90, no. 4, pp. 1621–1651, 2015.

[20] M. Elsayed and T. Elshandidy, "Do narrative-related disclosures predict corporate failure? Evidence from UK non-financial publicly quoted firms," *International Review of Financial Analysis*, vol. 71, Article ID 101555, 2020.

[21] D. ., C. Ding and Z. Y. Lv, "Research on comprehensive risk warning of property insurance Company based on rough set and classifier integration," *Insurance Studies*, vol. 6, pp. 73–85, 2014.

[22] T. H. Lin, "A cross model study of corporate financial distress prediction in Taiwan: multiple discriminant analysis, logit, probit and neural networks models," *Neurocomputing*, vol. 72, no. 16-18, pp. 3507–3516, 2009.

[23] F. Mai, S. Tian, C. Lee, and L. Ma, "Deep learning models for bankruptcy prediction using textual disclosures," *European Journal of Operational Research*, vol. 274, no. 2, pp. 743–758, 2019.

[24] S. X. Li, W. X. Shi, J. C. Wang, and H. S. Zhou, "A deep learning-based approach to constructing a domain sentiment lexicon: a case study in financial distress prediction," *Information Processing and Management*, vol. 58, no. 5, Article ID 102673, 2021.

[25] T. Hosaka, "Bankruptcy prediction using imaged financial ratios and convolutional neural networks," *Expert Systems with Applications*, vol. 117, pp. 287–299, 2019.

[26] X. Li, Q. Q. Liu, and Y. L. Wu, "Prediction on blockchain virtual currency transaction under long short-term memory model and deep belief network," *Applied Soft Computing*, vol. 116, Article ID 108349, 2022.

[27] M. Haris, M. N. Hasan, and S. Y. Qin, "Early and robust remaining useful life prediction of supercapacitors using BOHB optimized Deep Belief Network," *Applied Energy*, vol. 286, Article ID 116541, 2021.

[28] J. Wang and W. X. Han, "Research on the choice of financial ratio in financial crisis early warning," *Mathematics in Practice and Theory*, vol. 33, no. 8, pp. 36–41, 2003.

[29] C. Casey and N. Bartczak, "Using operating cash flow data to predict financial distress-some extensions," *Journal of Accounting Research*, vol. 23, no. 1, pp. 384–401, 1985.

[30] W. H. Beaver, "Financial ratios as predictors of failure," *Journal of Accounting Research*, vol. 4, pp. 71–111, 1966.

[31] E. I. Altman, "Financial ratios discriminant analysis and the prediction of corporate bankruptcy," *The Journal of Finance*, vol. 23, no. 4, pp. 589–609, 1968.

[32] J. A. Ohlson, "Financial ratios and the probabilistic prediction of bankruptcy," *Journal of Accounting Research*, vol. 18, no. 1, pp. 109–131, 1980.

[33] Y. Xiao, K. L. Xiong, and X. Zhang, "Enterprise financial risk early warning model based on TEI@I methodology," *Management Review*, vol. 32, no. 7, pp. 226–235, 2020.

[34] J. F. H. Chen and F. D. Qin, "Research on financial distress prediction of listed companies based on Chinese annual report management discussion and analysis text features," *Forecasting*, vol. 4, pp. 53–59, 2018.

[35] P. S. Rose and G. A. Giroux, "Predicting corporate bankruptcy: an analytical and empirical evaluation," *The Review of Business and Economic Research*, vol. 19, no. 2, pp. 1–12, 1984.

[36] S. Bhagat and B. Bolton, "Corporate governance and firm performance," *Journal of Corporate Finance*, vol. 14, no. 3, pp. 257–273, 2008.
[37] S. Dutta, M. Fuksa, and K. Macaulay, "Determinants of MD&A sentiment in Canada," *International Review of Economics and Finance*, vol. 60, pp. 130–148, 2019.
[38] D. Xiao Wu, X. Yao, and J. Luan Guo, "Is textual tone informative or inflated for firm's future value? Evidence from Chinese listed firms," *Economic Modelling*, vol. 94, pp. 513–525, 2021.
[39] C. Caserio, D. Panaro, and S. Trucco, "Management discussion and analysis: a tone analysis on US financial listed companies," *Management Decision*, vol. 58, no. 3, pp. 510–525, 2019.
[40] Y. S. Liu and Y. Y. Chen, "Tone at the top and credit risk warning for listed companies:textual analysis of company annual reports," *Financial Economics Research*, vol. 33, no. 4, pp. 46–54, 2018.
[41] Y. Y. Chen, "Forecating Financial distress of listed companies with textual content of the information disclosure: a study based on MD&A in Chinese annual reports," *Chinese Journal of Management Science*, vol. 27, no. 7, pp. 23–34, 2019.
[42] J. Almamy, J. Aston, and L. N. Ngwa, "An evaluation of Altman's Z-score using cash flow ratio to predict corporate failure amid the recent financial crisis: evidence from the UK," *Journal of Corporate Finance*, vol. 36, pp. 278–285, 2016.
[43] L. Lepetit and F. Strobel, "Bank insolvency risk and Z-score measures: a refinement," *Finance Research Letters*, vol. 13, pp. 214–224, 2015.
[44] S. P. Zhao, K. Xu, Z. Wang, C. Y. Liang, W. X. Lu, and B. Chen, "Financial distress prediction by combining sentiment tone features," *Economic Modelling*, vol. 106, Article ID 105709, 2022.
[45] X. M. Zhang, Y. X. Gao, and J. Gao, "Corporate annual report readability measurements and related factors:an analysis based on managerial manipulation," *Journal of Audit and Economics*, vol. 36, no. 1, pp. 79–89, 2021.
[46] H. Kang, B. J. Song, and W. Liu, "Complexity of annual report and asset mispricing——empirical research based on text analysis," *Collected Essays on Finance and Economics*, vol. 9, pp. 64–73, 2020.
[47] F. Li, "Annual report readability, current earnings, and earnings persistence," *Journal of Accounting and Economics*, vol. 45, no. 2-3, pp. 221–247, 2008.
[48] K. M. Wang, H. J. Wang, D. D. Li, and X. Y. Dai, "Complexity of annual report and management self-interest: empirical evidence from Chinese listed firms," *Management World*, vol. 34, no. 12, pp. 120–132, 2018.
[49] M. L. Sun, L. Jiang, and J. Sun, "Research on market reaction to self-serving performance attribution bias," *Accounting Research*, vol. 4, pp. 46–51, 2013.
[50] D. Q. Yao and H. S. Yang, "An empirical research on market response to self-serving attribution of listed companies' annual reports," *Journal of Sichuan Normal University Social Sciences Edition*, vol. 6, pp. 58–64, 2014.
[51] R. Matin, C. Hansen, C. Hansen, and P. Mølgaard, "Predicting distresses using deep learning of text segments in annual reports," *Expert Systems with Applications*, vol. 132, no. 10, pp. 199–208, 2019.