Hindawi
Science and Technology of Nuclear Installations
Volume 2018, Article ID 6801736, 14 pages
https://doi.org/10.1155/2018/6801736

Research Article

Development and Verification of a Transient Analysis Tool for Reactor System Using Supercritical CO_2 Brayton Cycle as Power Conversion System

Pan Wu, Chuntian Gao, and Jianqiang Shan

School of Nuclear Science and Technology, Xi'an Jiaotong University, 28 Xianning West Road, Xi'an, Shanxi, China

Correspondence should be addressed to Pan Wu; wupan2015@mail.xjtu.edu.cn and Jianqiang Shan; jqshan@mail.xjtu.edu.cn

Received 16 March 2018; Revised 3 July 2018; Accepted 30 July 2018; Published 2 September 2018

Academic Editor: Arkady Serikov

Supercritical CO_2 Brayton cycle is a good choice of thermal-to-electric energy conversion system, which owns a high cycle efficiency and a compact cycle configuration. It can be used in many power-generation applications, such as nuclear power, concentrated solar thermal, fossil fuel boilers, and shipboard propulsion system. Transient analysis code for Supercritical CO_2 Brayton cycle is a necessity in the areas of transient analyses, control strategy study, and accident analyses. In this paper, a transient analysis code SCTRAN/CO2 is developed for Supercritical CO_2 Brayton Loop based on a homogenous model. Heat conduction model, point neutron power model (which is developed for nuclear power application), turbomachinery model for gas turbine, compressor and shaft model, and PCHE type recuperator model are all included in this transient analysis code. The initial verifications were performed for components and constitutive models like heat transfer model, friction model, and compressor model. The verification of integrated system transient was also conducted through making comparison with experiment data of SCO2EP of KAIST. The comparison results show that SCTRAN/CO2 owns the ability to simulate transient process for S-CO2 Brayton cycle. SCTRAN/CO2 will become an important tool for further study of Supercritical CO_2 Bryton cycle-based nuclear reactor concepts.

1. Introduction

Supercritical CO2(s-CO_2) Brayton cycle is a promising power conversion technology, which has advantages like compact system configuration compared to steam generation system, higher efficiency, and less need of water consumption. It has aroused great interests among industry and academia of different energy types, especially in nuclear and solar energy [1, 2].

Many researchers studied the feasibility of using s-CO_2 Brayton cycle as power conversion system for nuclear applications. One option is to use s-CO_2 Brayton cycle to cool the reactor core directly. Figure 1 shows the coolant flow and heat transfer in the nuclear reactor system coupling with s-CO_2 Brayton cycle. The s-CO_2 entering the reactor core is heated to high temperature by the thermal energy released in the core. Then high-temperature s-CO_2 flows into the gas turbine and drives the shaft to rotate. The generator connected with the shaft can produce electricity. After the expansion process through the turbine, s-CO_2 depressurized to a lower pressure, which is usually slightly over the critical pressure. The high-temperature low pressure s-CO_2 enters the recuperator to heat the s-CO_2 to required inlet temperature for the reactor at the high pressure side. After transferring energy to the high pressure side, the low pressure side s-CO_2 is then cooled to be close to the critical temperature of s-CO_2 by secondary water flow in the precooler. The s-CO_2 flow rejects heat in the precooler and makes sure that the high density s-CO_2 is compressed by the compressor. High pressure leaving the compressor is heated by the low pressure side coolant and enters the reactor core, as described before. In the development of this type of reactor concepts, the concept of reactor core cooled by s-CO_2 should be developed as well as the configuration of s-CO_2 Brayton cycle. As the only successfully operated CO_2 cooled reactor, Advanced Gas Reactor (AGR) uses CO_2 coolant at 4.33MPa and bundled fuel pins formed by oxide fuel and stainless-steel cladding [3]. Even though operating

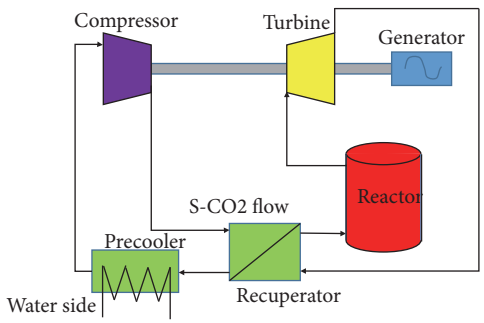

Figure 1: Schematic map of nuclear reactor system cooled by s-CO2 Brayton cycle.

pressure and the neutronic spectrum are different from that of S-CO_2 cooled fast reactor, the operational characteristics, safety issues, and behavior of the fuel, cladding, and coolant could provide great reference for S-CO_2 cooled fast reactor core design. Pope [4] from MIT has proposed a 4-loop 2400MWth direct S-CO_2 cooled fast reactor concept coupled with recompression S-CO_2 Brayton cycle. This concept owns a core design with Tube in Duct (TID) assemblies and advanced shielding material, advanced cladding materials for high burn-up fuel, and high temperature. Oxide fuel was selected as the fuel form for its chemical compatibility with CO_2. Accident analysis and safety design have been carried out for this concept [5]. A relatively small fast reactor concept which is cooled with CO_2 at pressure of 20MPa is proposed by Parma et al. from Sandia National Laboratories [6]. The reactor concept applied bundled fuel assemblies, which refers from that of Advanced Gas Reactor (AGR) [3]. A supercritical CO_2-cooled Micro Modular Reactor (MMR) with 36.2 MWth power is developed by [7]. Transportability is one of the MMR's features, which is achieved by the compact cycle configuration and modularized reactor design.

Another option to apply S-CO_2 Brayton cycle working as the power conversion system of existing Gen IV reactor concept, which tries to take advantages of large amount of R&D work of these new concepts and improve the cycle efficiency at the same time. Feasibility of S-CO_2 Brayton coupled to sodium fast reactor concept KALIMER-600 [8], lead fast reactor concept STAR-LM [9], and SSTAR [10]. S-CO_2 Brayton cycle configuration, as well as the transient performance and control strategy of these concepts, has been carried out, which shows great potential for applying S-CO_2 Brayton cycle on these new reactor concepts. A summary of the core design and Brayton cycle design of the above nuclear applications is listed in Table 1.

Transient analysis code is a necessity for study of control strategy, dynamic characteristic, and safety analysis for S-CO_2 Brayton cycle direct or indirect cooled reactors. According to the features of Brayton cycle coupled reactor applications, the transient analysis code should possess the ability to simulate reactor core, precooler, recuperator, and turbomachinery including compressor, gas turbine and rotating shaft model.

Different transient analysis codes have been developed to satisfy the demand for control strategy and accident study for s-CO_2 Brayton cycle direct or indirect cooled reactors. A transient analysis code MMS-LMR was developed to simulate the system transient and evaluate control logics for sodium-cooled fast reactor KALIMER-600 [8]. The code can simulate coolant of Sodium and CO_2, and modules like reactor, pipe, Na-CO_2 heat exchanger, recuperator, and compressor. Code MARS has been applied to carry out up-power and down-power transient simulation for the Supercritical CO_2 Integral Experimental Loop (SCIEL) [11]. A modified GAMMA+ code was developed and applied for the analysis of KAIST Micro Modular Reactor (MMR) for simulation of loss of load and loss of coolant accidents [12]. Accurate CO_2 properties near critical point and turbomachinery performance map were incorporated into the original GAMMA+ which was previously a transient analysis code for Very High-Temperature Reactor (VHTR) system developed by KAERI. The performance map for GAMMA+ is produced by KAIST-TMD, which is an in-house code to design the turbomachinery. GAMMA+ code simulation ability near critical point has been validated with comparing with the experiment data from SCO2PE [13]. RELAP5-3D has s-CO_2 properties and compressor and turbine models, which could help to simulate the s-CO_2 Brayton cycle. It has been used to analyze the safety performance for s-CO_2 cooled fast reactors with passive safety system under loss of coolant accident and loss of generator load accident [4, 5]. A plant dynamics computer code named Plant Dynamics Code (PDC) has been developed by ANL [14]. The PDC solves time-dependent mass, momentum, and energy conservation equations for s-CO_2 fluid plus the turbomachinery shaft dynamics equation. This code has been applied to various applications, such as transient and control strategies analysis of s-CO_2 Brayton cycle coupled to lead-cooled fast reactor [9], autonomous load following for an SFR by coupling with SAS4A/SASYSYS-1 to determine the core side [15], simulation of s-CO_2 Integrated System Test [16], and off-design behavior analysis for s-CO_2 Brayton cycle coupled to sodium-cooled fast reactor [17]. Validation work has been done by comparing PDC compressor model with SNL/BNI compressor test data [18]. TRACE source code was modified by adding new fluid (s-CO_2) as well as Brayton turbomachinery components to enhance its ability to simulate s-CO_2 Brayton cycle [19, 20]. Cycle design and control features during startup and operation have been carried out [21]. GAS-PASS is a dynamic simulation and control code for gas-cooled Brayton cycle reactor power conversion system. It has been modified to deal with the use of s-CO_2 Brayton cycle [22]. The control strategies have been studied [23].

Through the overview of the current transient analysis code development for nuclear application related Brayton cycle, we can find most of the codes are developed based on existing transient analysis codes with incorporating CO_2 property, turbomachinery models, and PCHE models. The validation work is based on experimental data produced by s-CO_2 Brayton cycle experimental platforms, such as 100 kWe s-CO_2 power cycle system facility constructed by the cooperation of Knolls Atomic Power Laboratory (KAPL) and Bettis Atomic Energy Laboratory (BAEL) in 2012 [24], 10MWe basic s-CO2 Brayton cycle established by Sadia National

Table 1: Overview of current study on S-CO_2 Brayton cycle study working as power conversion system on nuclear applications.

Concept Name	-	MMR	SC-GFR	-	KALIMER-600	STAR-LM	SSTAR
Developing Institution	-	KAIST	SNL	MIT	KAERI	Argonne National Laboratory	Argonne National Laboratory
Brayton cycle coupled method	-	direct	direct	direct	indirect	indirect	indirect
Core Part	thermal power (MW)	36.2	200	2400	1528.9	400	45
	Pressure (MPa)	20	20	20	0.1	0.1	0.1
	Fuel type	UC fuel	UO2	UO2BeO	U-TRU-10%Zr	TRU-N Enriched to N15	Nitride fuel
	Cladding type	Stainless steel	High Ni Stainless steel	ODS MA956	Mod.HT9	Co-extruded Si-enhanced F/M stainless steel with F/M substrate	-
	Core outlet temperature	550	650	650	545.3	578	565.8
	Mass flow rate (kg/s)	180	920	11708	7731.3	19708	2125
	Coolant	CO2	CO2	CO2	Sodium	Pb	Pb
Power Conversion System	Brayton cycle type	simple cycle	no specific design	recompression cycle	recompression cycle	recompression cycle	recompression cycle
	Cycle mass flow rate (kg/s)	180	-	2927	8076.6	2276	239.3
	T/P of compressor Inlet (°C/MPa)	60.8/8.0	-	32/7.69	31.25/7.4	31.25/7.4	31.25/7.4
	T/P of compressor outlet (°C/MPa)	142.2/20.0	-	60.9/20	84.8/20.0	85/20.0	84.9/20.0
	T/P of recompression compressor inlet (°C/MPa)	-	-	70.9/7.71	91.2/7.46	86.3/7.405	90.9/7.401
	T/P of recompression compressor outlet (°C/MPa)	-	-	159.1/20.0	189.4/19.98	183.8/19.98	189.8/20
	T/P of turbine inlet (°C/MPa)	550/19.93	-	650/19.45	508.0/19.74	540.0/19.88	541.4/19.99
	T/P of turbine outlet (°C/MPa)	440.75/8.16	-	529.9/7.93	394.2/7.6	426.9/7.713	420.1/7.435
Reference	-	[7]	[6]	[4]	[8]	[9]	[10]

laboratory(SNL) [25], and the s-CO_2 integral experiment loop (SCIEL) constructed by Korea Atomic Energy Research Institute (KAERI) [26]. Component performance and cycle transient characteristics of these experiment facility are vital for validating the newly developed code.

As China is also launching projects into s-CO_2 Brayton cycle development for concentrated solar thermal, fossil fuel boilers, and nuclear power, transient analysis code for S-CO2 Brayton cycle is urgently needed to help in predesigning of experimental facility, as well as the new Brayton cycle-based reactor concept development. The development of a transient analysis code is presented in this paper. SCTRAN [27], which originally is a safety analysis code for SCWR, is selected to be upgraded to simulate the S-CO_2 Brayton cycle by adding accurate thermal property and constitutive model for CO_2, turbomachinery models (including compressor, gas turbine, and shaft). Due to the lack of experiment data, the current validation strategy is to make simple validation with limited experiment data and code-to-code comparison with other codes like GAMMA+. The initial verification for SCTRAN/CO2's ability to do component model simulation and cycle simulation is carried out.

2. Code Development

2.1. Introduction of SCTRAN. SCTRAN is a one-dimensional safety analysis code for SCWRs, which applies homogeneous model to simulate the fluid flow. The homogeneous model assumes the two phases of coolant are in thermal equilibrium state and the velocity difference of the two phases is zero. Compared to drift model and two-phase model, this model needs less constitutive correlations and is easy to be solved numerically. For most of the transient or accident case in s-CO_2 Brayton cycle, the coolant will stay in gas state. That is the reason why homogeneous model is adopted to develop the transient analysis code for s-CO_2 Brayton cycle. The conservative equations of mass, momentum, and energy are as follows.

Mass conservative equation is

$$\frac{\partial}{\partial t}\rho A + \frac{\partial}{\partial z}W = 0 \tag{1}$$

Momentum conservative equation is

$$\frac{\partial}{\partial t}W + \frac{\partial}{\partial z}WV = -A\frac{\partial p}{\partial z} - \frac{2A\rho V\,|V|}{D_h}f_{tp} + \rho A g_z \tag{2}$$

The first item in the right hand of the equation denotes pressure drop, the second item denotes fanning friction pressure drop, and the last item denotes the pressure drop caused by gravity.

Energy conservative equation is

$$\begin{aligned}\frac{d}{dt}U = &-\frac{1}{2}\frac{L}{A}\frac{d}{dt}\left(\frac{W^2}{\rho}\right) - \sum_j \left\{\left(W_g h_g + W_l h_l\right)\right.\\ &\left.+\frac{1}{2}\left(W_g V_g V_g + W_l V_l V_l\right) + Wg\left(z - z_j\right)\right\} + Q\end{aligned} \tag{3}$$

The first item in the right hand of the equation denotes kinetic energy change rate, the second item denotes energy transfer caused by fluid flow, and the last item denotes energy transfer caused by heat transfer and inner heat source.

Based on staggered grid method, control volume balance method, and one-order upwind difference scheme applying to the time derivative related items, a numerical procedure is developed with which the mass and energy of the control volumes and the mass flow of the junctions can be obtained conveniently.

In order to calculate the core power and its reactivity feedback effects, SCTRAN applies the fission decay heat equation and point neutron kinetics equation with six groups of delayed neutron to calculate the core power.

$$\begin{aligned}\frac{1}{v}\frac{\partial\phi(r,t)}{\partial t} = &D\nabla^2\phi(r,t) - \Sigma_a\phi(r,t)\\ &+ (1-\beta)k_\infty\Sigma_a\phi(r,t) + \sum_{i=1}^{6}\lambda_i C_i(r,t)\end{aligned} \tag{4}$$

The item in the left hand of the equation denotes the neutron flux variation with time, the first item in the right hand of the equation denotes the neutron leakage rate, the second item denotes the neutron absorption rate, and the third and fourth item separately represent the neutron production rate of prompt neutron and delayed neutron.

SCTRAN's ability to simulate the transients and accidents of SCWR has been verified by comparing with APROS code and RELAP5-3D code [27], respectively. It has been widely used in transient and accident analysis for supercritical water reactor [28, 29].

In order to make SCTRAN suitable for s-CO_2 Brayton cycle-based reactor system, accurate CO_2 property package and heat transfer and friction models for carbon dioxide and turbomachinery models including gas turbine, compressor, and rotating shaft should be developed.

2.2. Compressor Model Development

2.2.1. Basic Model of Compressor. The goal of compressor model is to calculate the flow condition inside the compressor and at the compressor outlet. A quasistatic status is assumed for flow inside compressor under which situation the performance map could be used to evaluate the efficiency and pressure ratio of compressor. The solution of compressor model should include pressure rise which could be used for fluid momentum conservation equation, enthalpy increase which was needed in fluid energy conservation equation, and torque which is needed for shaft model to simulate rotating speed.

Figure 2 shows the fluid enthalpy and entropy variation during ideal and realistic compression process. The ideal compression process is regarded as an isentropic process and the realistic compression process needs a factor of compressor adiabatic efficiency to account for the additional enthalpy increase compared to that of the ideal process. The definition of adiabatic total to total efficiency is as follows:

$$\eta_{ad} = \frac{\text{Isentropic work}}{\text{Actual work}} = \frac{h_{2'}^T - h_1^T}{h_2^T - h_1^T} \tag{5}$$

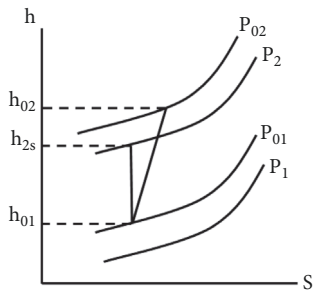

Figure 2: Ideal and realistic compression process inside compressor.

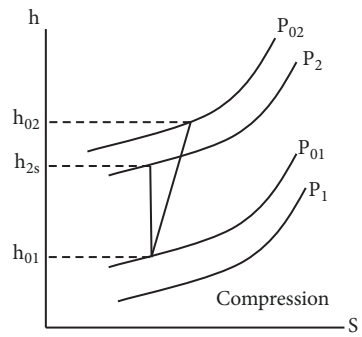

Figure 3: Ideal and realistic expansion process inside gas turbine.

Therefore, the actual outlet enthalpy of compressor can be obtained with ideal outlet enthalpy and adiabatic efficiency through (5). The ideal enthalpy increase could be obtained through the integration of equation DH=v∗DP.

The pressure rise and adiabatic efficiency through the compressor are obtained from the performance map which is specially produced for the targeted compressor by other specific codes. As the compressor pressure ratio is regarded to be obtained from compressor performance map according to the rotating speed and coolant flow rate, the pressure increase through compressor can be obtained:

$$\Delta P = P_1^T \left(R_p - 1\right) \tag{6}$$

where R_p denotes the compressor pressure ratio and ${P_1}^T$ denotes the compressor inlet total pressure. The kinetic change of the fluid is included in the item of total pressure in (6).

Assuming that no heat dissipated in the compression process, the compressor power acting on the fluid is

$$\begin{aligned} W_{c.v.} &= \dot{m}\left(h_2^T - h_1^T\right) = \dot{m}\left(h_{2'}^T - h_1^T\right) + \dot{m}\left(h_2^T - h_{2'}^T\right) \\ &= \mathrm{W_s} + \mathrm{W_d} \end{aligned} \tag{7}$$

where h_2^T is the real enthalpy at the compressor outlet, $h_{2'}^T$ is the ideal enthalpy at the compressor outlet, W_s is the power produced by compressor during the isentropic process, and W_d is the dissipated power in the compression process.

In the ideal compression process, the ideal work produced by compressor equals the energy increase of s-CO_2 flowing through the compressor:

$$\tau_s = \frac{\dot{m}}{\omega}\left(h_{2'}^T - h_1^T\right) \tag{8}$$

The dissipated torque can be calculated using the following equation:

$$\tau_\mathrm{d} = \frac{\dot{m}}{\omega}\frac{1-\eta_{ad}}{\eta_{ad}}\left(h_{2'}^T - h_1^T\right) \tag{9}$$

Summing up (8) and (9), the total torque of the compressor is obtained:

$$\tau_\mathrm{t} = \tau_s + \tau_\mathrm{d} = \frac{\dot{m}}{\omega}\frac{1}{\eta_{ad}}\left(h_{2'}^T - h_1^T\right) \tag{10}$$

Therefore, through (5), (6), and (10), the enthalpy increase, pressure increase of fluid through the compressor, and total torque of the compressor can be obtained.

2.2.2. Incorporation of Compressor Model to Code SCTRAN. The compressor component will be regarded as a normal junction and volume when incorporating into SCTRAN. The pressure rise calculated by compressor model will be added to the momentum conservation equation of the represented junction and the enthalpy change calculated by compressor model will be added to the energy conservation equation of the represented volume.

2.3. Gas Turbine Model Development. Figure 3 shows the ideal and realistic expansion process inside gas turbine model. The process of turbine acting is inverse process of compressor acting. Thus the same theory was applied to gas turbine model and the following correlations are obtained.

For fluid enthalpy increase,

$$\Delta h = \frac{h_{2'}^T - h_1^T}{\eta_{ad}} \tag{11}$$

For pressure drop,

$$\Delta P = P_1\left(R_p - 1\right) \tag{12}$$

For total torque of gas turbine,

$$\tau_\mathrm{t} = \tau_s + \tau_\mathrm{d} = \frac{\dot{m}\,\eta_{ad}}{\omega}\left(h_{2'}^T - h_1^T\right) \tag{13}$$

2.4. Shaft Model Development. In the Brayton cycle, there are many turbomachineries connected to the shaft, which include gas turbine, compressor, generator, and control system. The shaft model for evaluation shaft rotating speed is as follows:

$$\sum_i I_i \frac{d\omega}{dt} = \sum_i \tau_i - \sum_i f_i\omega + \tau_c \tag{14}$$

The first item on right hand of (14) denotes the torques produced by compressor, turbine, or generator. The second item denotes the torques produced by friction while the third item denotes the torque produced by control system.

Table 2: Relative prediction error of the developed CO_2 property package compared to NIST REFPROP 9.0.

CO_2 Property	Symbol	Regions	Relative error
Saturated liquid enthalpy	h_f	-	±0.015%
Saturated vapor enthalpy	h_g	-	±0.009%
Temperature	T	subcooled area	-0.05% to 0.1%, 99% of which is within relative errors of ±0.05%
		superheated region 1	±0.2%, 99% of which is within relative errors of ±0.1%
		superheated region 2	-0.1% to 0.25%, 99% of which is within relative errors of ±0.05%
Specific volume	v	subcooled area	-0.5% to 1%, 99% of which is within relative errors of ±0. 5%
		superheated region 1	-1% to 4%, 99% of which is within relative errors of ±1%.
		superheated region 2	-0.5% to 0.1%, 95% of which is within relative errors of ±0.1%
Dynamic viscosity	μ	-	-1.5% to 0.5%, 99% of which is within ±0.5%

2.5. Constitutive Model Incorporation

2.5.1. Properties of Carbon Dioxide. An independent and accurate thermal property model for carbon dioxide over a large parameter range is needed to be incorporated into code SCTRAN. Generally, there are three methods to calculate the fluid thermal property in thermal hydraulic analysis codes, which include property lookup tables or figures, solution of fluid state equations, and direct calculation of fitting correlation. In method of property tables or figures, the fluid thermal property is plotted in figures or tabulated in tables, which is easy for users to find property for certain state. However, the calculation efficiency of this method is low, which makes it hard to be applied in large thermal analysis codes which needs to calculate the fluid property repeatedly. The solution of fluid state equation is based on strict theoretical and experimental study. Thus, this method can produce fluid property with high accuracy. However, these basic fluid state equations are complex and time-consuming because iterations are needed to get the final results. The method of fitting correlation is to get a mathematical correlation with certain prediction accuracy for fluid property based on the existing thermal property data. The mathematical correlation can be polynomial expression or some other type. This method with the merits of small computational effort and high prediction accuracy can be conveniently programmed into thermal analysis codes. It has been widely used in thermal analysis codes. Thus the method of fitting polynomial correlation was applied in this paper to develop the CO2 property package.

The based thermal property data which is used for fitting correlations comes from NIST REFPROP. The thermal property package covers pressure range of 0.1~20MPa and temperature range of 0~991°C. Parameters including saturated liquid and vapor enthalpy, temperature, specific volume, and dynamic viscosity have been obtained through the pressure and enthalpy. The property calculation is divided into three regions based on pressure and enthalpy, which are subcooled area, superheated region 1 (enthalpy over 360 kJ/kg but below 600 kJ/kg), and superheated region 2 (enthalpy over 600 kJ/kg). Table 2 shows the relative prediction error between the developed CO_2 property and NIST REFPROP 9.0. It seems that the developed package can predict CO_2 property very well in most property range with a relative error lower than 0.5%. However, for property near critical point, very large prediction error exists. The prediction performance of the developed CO_2 property package at near critical point area should be improved in the future work.

2.5.2. Heat Transfer Correlation. For the straight semicircular flow channels in PCHE, correlation Gnielinski is applied ([30]). This correlation is suitable for application range of Re between 2300 and 5×10^6 and Pr between 0.5 and 2000.

$$N_u = \frac{hD_e}{\lambda} = \frac{(f/8)(\mathrm{Re}-1000)\,\mathrm{Pr}}{1+12.7\sqrt{(f/8)}\left(\mathrm{Pr}^{2/3}-1\right)} \tag{15}$$

where

$$f = \frac{1}{\left(1.8\log(\mathrm{Re})-1.5\right)^2} \tag{16}$$

The correlations for other Reynolds number and other structure of flow channel are not included in code. Further study should be carried out in this area to expand the code application range. For the heat transfer of coolant flowing through fuel buddle inside the core, correlation Gnielinski is currently used. There are still problems in clarifying the uncertainty produced by applying Gnielinski correlation to evaluate core heat transfer. However, several published papers [4, 31] applied Gnielinski to calculate the heat transfer inside the core without explaining the uncertainty.

2.5.3. Friction Correlation. The friction is evaluated by correlation Zigrang-Sylvester, which is an approximate explicit correlation of Colebrook-White correlation [30]. The Zigrang-Sylvester is suitable for situation of which Re number is larger than 3400. The correlation is listed as follows:

$$\frac{1}{\sqrt{f}} = -2\log\left\{\frac{\varepsilon}{3.7D_e} + \frac{2.51}{\mathrm{Re}}\left[1.14-2\log\left(\frac{\varepsilon}{D_e}+\frac{21.25}{\mathrm{Re}^{0.9}}\right)\right]\right\} \tag{17}$$

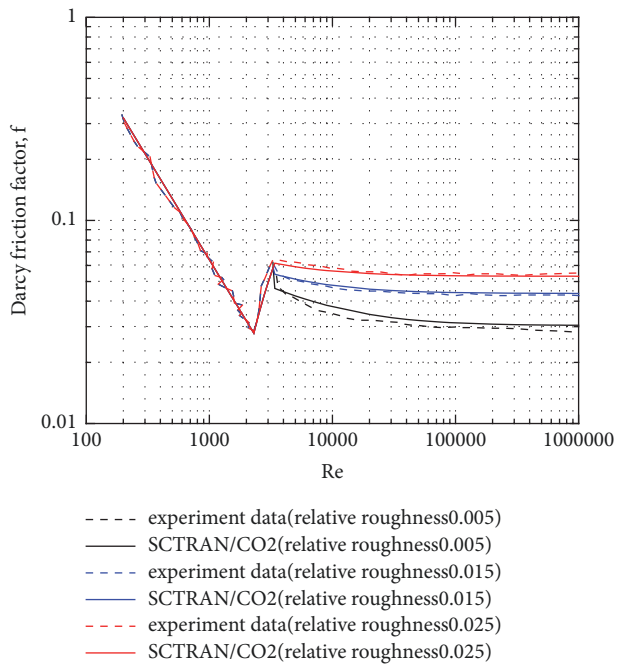

Figure 4: Comparison for friction coefficient of various roughness between experimental data and SCTRAN/CO2 prediction.

When Re is lower than 2300, the friction model for laminar flow is used:

$$f = \frac{64}{\mathrm{Re}} \tag{18}$$

When Re number is between 2300 and 3400, a linear interpolation is needed.

3. Initial Verification for Component Model in SCTRAN/CO2

3.1. Friction Model Verification. Wang et al. [32] has attained friction coefficients of supercritical carbon dioxide with various pressures and temperatures in pipes through experiments. The measured pipeline in the experiment has a length of 7.5m and variable diameters of 30mm, 10mm, and 6mm. The variable diameter enables the study of tube roughness effect on friction coefficient without changing the tube material. The temperature range of the experiment is 30-150°C, the pressure range is 3.5-40 MPa, the Reynolds number range is 200-2.0×10^6, and surface relative roughness (ratio of roughness over tube diameter) is 0.005, 0.015, and 0.025. The system pressure and coolant flow Reynolds number cover the operation and transient conditions in s-CO_2 Brayton cycle. The temperature range is a little bit narrow compared to that of s-CO_2 Brayton cycle. So the experiment data in [32] is applied to verify the friction model in code SCTRAN/CO2. As concluded in [32], Reynolds number can reflect variation of physical property parameter comprehensively, so a horizontal tube is modeled by SCTRAN/CO2 with 20 nodes. The coolant flow Re number is adjusted by changing the inlet coolant flow rate. Figure 4 illustrates the friction coefficient comparison between the experiment data and SCTRAN/CO2 predicted result. Reynolds number varies from 200 to 2.0×10^6. From the figure we can find that the prediction results in laminar flow area and turbulent flow area fit well with the experiment data.

3.2. Heat Transfer Model Verification

3.2.1. Evaluation of Gnielinski Correlation on PCHE Heat Transfer Experimental Data. A heat transfer experiment about PCHE which use s-CO_2 and water as the heat transfer media in conditions relevant to the precooler in the s-CO_2 Brayton cycle is conducted by [33]. Different experiment cases, as well as CFD simulation, with small and large temperature differences across the PCHE have been carried out. The heat transfer data produced by experiment and numerical simulation is used in this paper to evaluate the prediction performance of Gnielinski correlation on PCHE heat transfer. The schematic maps of the experimental loop are shown in Figure 5. The experiment loop is made up of a water loop and a closed s-CO_2 loop. The heat exchange happens in the PCHE, which has overall dimensions of 120×200×1200mm. The s-CO_2 inlet temperature of the PCHE could be controlled by adjusting the power supply. Some large temperature difference tests are carried out to simulate the working conditions of the precooler in the Brayton cycle.

Several large temperature difference tests are simulated by SCTRAN/CO2 to verify that if correlation Gnielinski is capable of simulating the working conditions of precooler. The nodalization of SCTRAN/CO2 is shown in Figure 6. As there is no technique to measure the coolant temperature inside PCHE flow channel, only PCHE outlet temperature can be compared between the result of SCTRAN/CO2 and the experimental data to evaluate the overall heat transfer coefficient. A mesh size sensitivity is carried out to investigate the proper nodalization for evaluating PCHE heat transfer. As shown in Figure 7, with the increase of node number, the outlet temperature at s-CO_2 and water side for case 6 predicted by SCTRAN/CO2 becomes closer to the experiment data. Considering the balance between prediction accuracy and calculation time, 20 nodes are selected to simulate the PCHE.

Table 3 lists the experimental conditions of the cases which are used to verify the heat transfer model in the SCTRAN/CO2 code. In these cases, for the CO_2 side, the operation pressure is about 8 MPa, and the s-CO_2 inlet temperature is held constant at 88°C with mass flow rate of 100, 200, 300, 400, and 500 kg/hr. For the water side, the mass flow rate is set to 700 kg/hr, and the water inlet temperatures varied to achieve the desired S-CO_2 outlet temperature. For test B6~B10, the target S-CO_2 outlet temperature is 36°C and, for test B11~B15, the target S-CO_2 outlet temperature is 38°C.

Figure 8 shows the temperature distribution along the channel length from SCTRAN/CO2. Due to the fact that only the PCHE inlet and outlet temperature data is available according to the experiment, it is not possible to verify the accuracy of the temperature distributions calculated by the code. However, the simulated temperature distribution agrees

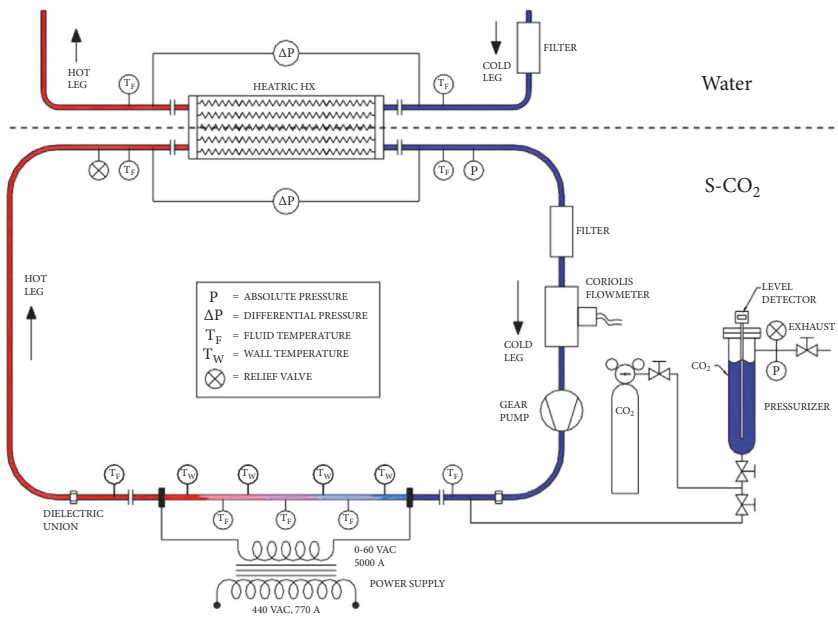

Figure 5: Schematic diagram of the experiment loop [33].

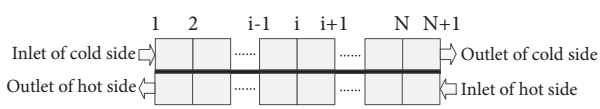

Figure 6: SCTRAN/CO2 nodalization for PCHE.

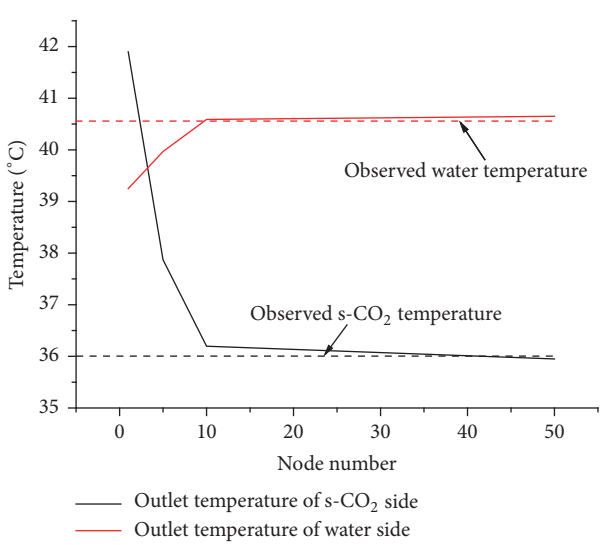

Figure 7: Mesh size sensitivity on outlet temperature prediction for PCHE in case 6.

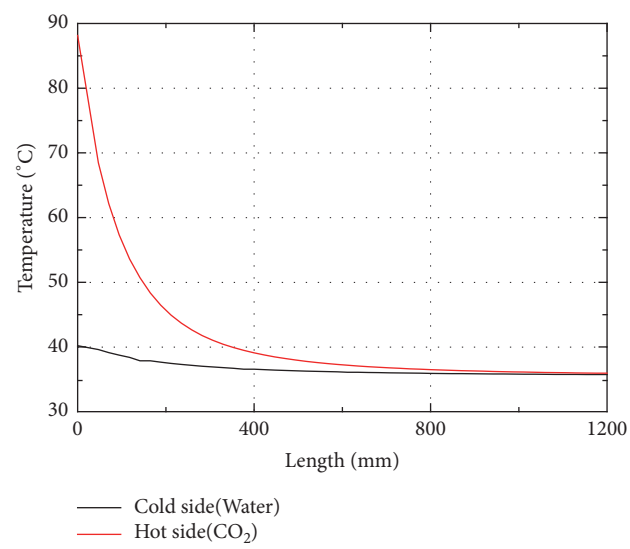

Figure 8: Temperature distribution of water and s-CO2 side predicted by SCTRAN/CO2 for test B6.

with typical counter-flow heat exchanger temperature distributions in physical aspect. Figure 9 shows the comparison between experimental data and simulation result on s-CO_2 outlet temperature. The square dots represent the simulation result using 2D-FLUENT by [33], and the solid circle represents the simulation result using SCTRAN/CO2 with Gnielinski correlation, and the dash line shows the 3% error band. From the figure, we can see that prediction errors of the outlet temperature of the precooler for SCTRAN/CO2 are larger in the cases which aim to achieve an outlet temperature of 36°C than that in the cases which aim to achieve an outlet temperature of 38°C. However, the prediction errors of SCTRAN/CO2 for all the experimental conditions are in the 3% error band, which indicate Gnielinski correlation is able to predict the heat transfer conditions for precooler. By the way, the 2D-FLUENT result shows large prediction errors due to the setting of unchanged water property by [33].

Table 3: Details of the experimental conditions.

TEST NO.	P_h	m_{CO2}	T_{h_in}	T_{h_out}	m_{H20}	T_{c_in}
	MPa	Kg/hr	°C	°C	kg/hr	°C
B6	8.003	100.53	88.63	36.07	701.59	35.63
B7	8.001	200.77	88.10	35.98	699.78	35.11
B8	7.972	297.14	89.36	36.20	701.8	35.05
B9	8.003	401.01	87.92	36.05	701.77	33.28
B10	7.995	500.61	87.93	35.90	700.09	31.28
B11	8.003	100.03	87.68	37.94	697.80	37.68
B12	8.005	199.73	88.85	37.97	697.80	37.53
B13	7.998	301.31	88.17	38.03	699.86	37.48
B14	8.020	404.29	88.97	38.29	701.62	37.58
B15	7.998	501.79	88.09	38.01	702.25	36.83

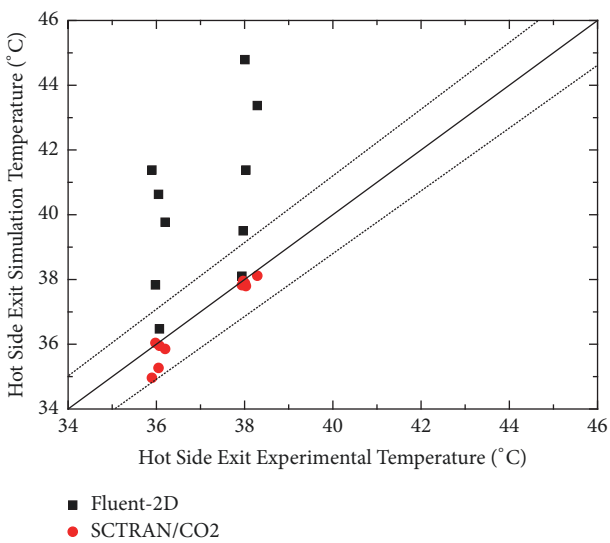

Figure 9: The comparison for S-CO2 outlet temperature between experimental data and simulation result.

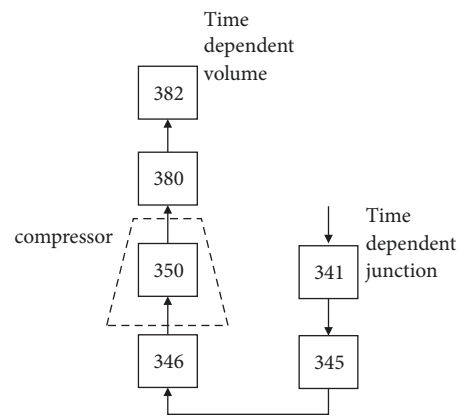

Figure 10: Nodalization of the recompressing compressor.

3.3. Compressor Model Verification. Due to lack of design and experiment data on compressor performance, the verification of compressor model is carried out through code-to-code compressor with RELAP5-3D code on compressor consuming power and GAMMA+ on the outlet temperature prediction in the open literature.

3.3.1. Comparison with Code RELAP5-3D on Compressor Consuming Power. Fisher and Davis [34] presented a detailed information of compressor model in RELAP5-3D and carried out a comparison between RELAP5-3D and the operation result of recompressing compressor designed by MIT. The same operation condition will be simulated by SCTRAN/CO2 in this part to verify its ability to calculate the consuming power needed for compressor operation.

Figure 10 depicts the nodalization of the recompressing compressor simulation. Control volumes 341 and 382 are the inlet and outlet boundaries of this simple model, which are simulated by time-dependent volume in SCTRAN/CO2 and RELAP5-3D. The pressure of control volume 341 is 9.08MPa and the temperature is 363K, which will keep constant in the simulation. Control volume 350 represents the compressor. The compressor rotating speed and inlet mass flow rate will be changed to evaluate the compressor performance at different conditions. A series of steady-state calculation were carried out to study the performance of the compressor under relative compressor rotating speed of 0.5, 0.8, and 1.0, as well as relative s-CO_2 flow rate between 0.4 and 1.0. The performance map of the compressor in [34] was adopted for SCTRAN/CO2 simulation.

Figure 11 showed the result comparison between SCTRAN/CO2 and RELAP5-3D. The results predicted by SCTRAN/CO2 were in excellent agreement with the RELAP5-3D predicted result. At relative speed ratio of 1.0, the largest relative error the consuming power is 1.2% while, at relative speed ratio of 0.8, the largest relative error the consuming power is 1.47%. When the relative speed ratio comes to 0.5, the largest relative error is 8.1%, which is much higher than those. This larger error may be produced in the process of assembling data from the paper, not due to the compressor model. The performance of SCTRAN/CO2 compressor model verified its ability to predict the compressor consuming power.

Table 4: Experiment data from SCO2PE and predicted result from SCTRAN/CO2 and GAMMA+ on the compressor outlet temperature.

		Experiment(SCO2PE data)	GAMMA	SCTRAN/CO2
Compressor outlet temperature/°C	case 1	38.3	42.2(+3.9)	40.55(+2.25)
	case 2	45.8	46.5(+0.7)	46.67(+0.87)
Compressor outlet pressure/MPa	case 1	8.65	8.65	8.65
	case 2	9.12	9.12	9.15
compressor efficiency	case 1	58.6	58.6	58.6
	case 2	36.1	36.1	36.1

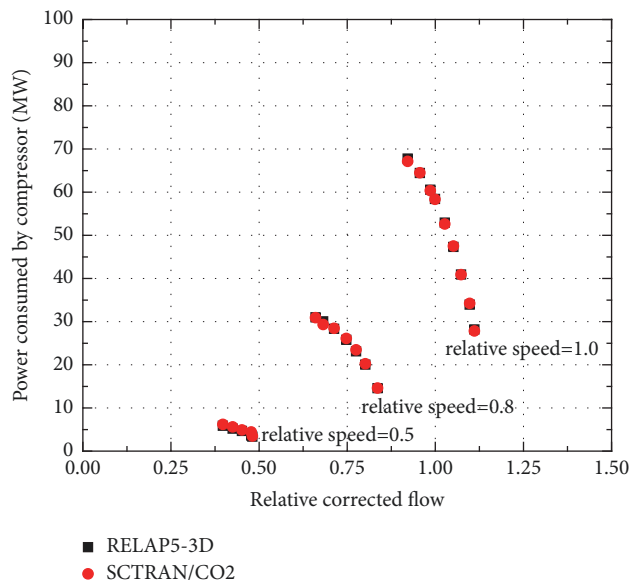

Figure 11: Predicted compressor consuming power by SCTRAN/CO2 and RELAP5-3D.

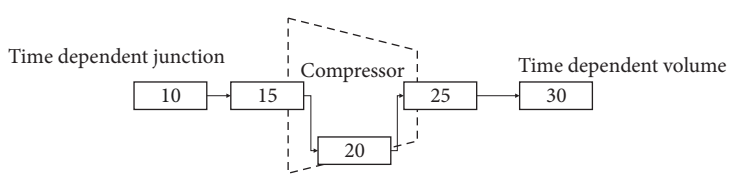

Figure 12: Nodalization of GAMMA code [13].

3.3.2. Comparison with Experiment Data and Code GAMMA+ on Compressor Outlet Temperature Prediction. Bae et al. [13] carried out experimental and numerical investigation of s-CO_2 test loop (SCO2PE) near critical point operation. Two different compressor operation conditions near the critical point are designed to verify the GAMMA+ predicted result for the compressor outlet temperature. Figure 12 shows the nodalization of code GAMMA+ for the compressor part of SCO2PE. Control volumes 15, 20, and 25 denote the compressor part and control volume 100 is a time-dependent junction, which can adjust the inlet flow rate and temperature for the compressor. Control volume 30 is the outlet boundary, which is also simulated by time-dependent volume. The same model was built by SCTRAN/CO2. Two different operation conditions are simulated. In case 1, the compressor flow rate is 2.86kg/s and the fluid temperature is 32.5°C, and the compressor inlet pressure is 7.44MPa. In case 2, the compressor flow rate is 2.00kg/s and the fluid temperature is 39.9°C and compressor inlet pressure is 8.29MPa. In order to focus on the verification of outlet temperature prediction, the pressure ratio and efficiency of the compressor and the inlet condition of the compressor are set to be the same as those in SCTRAN/CO2 model, GAMMA+ model, and the experimental conditions. Table 4 shows the experimental data from SCO2PE and predicted result from SCTRAN/CO2 and GAMMA+ on the compressor outlet temperature. In case 1, the compressor operation condition is closer to the critical point; the prediction errors of both codes are larger than those in case 2. In case 1, SCTRAN/CO2 predicted a smaller outlet temperature bias of 2.25°C, compared to temperature bias of 3.9°C predicted by GAMMA+. In case 2, outlet temperature predicted by these two codes is close to each other, which is also close to the experiment data.

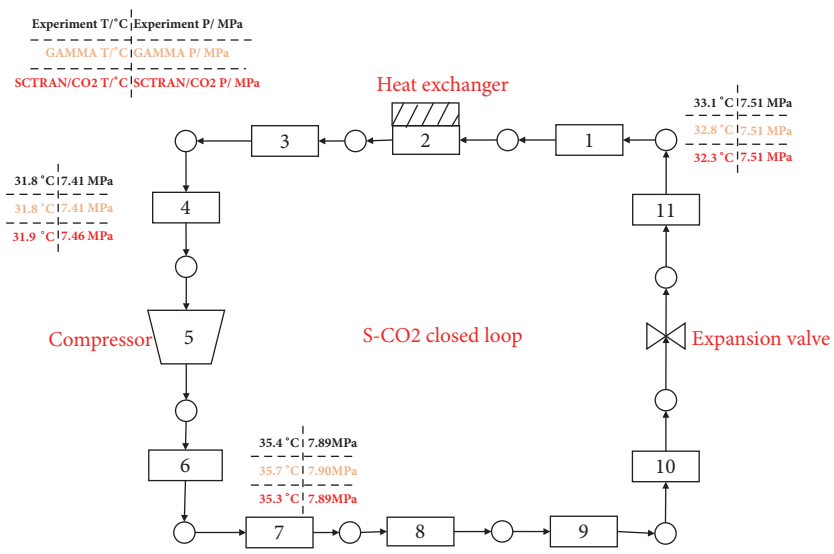

Figure 13: Nodalization of SCTRAN/CO2 model and steady-state result at each node.

However, large experiment data uncertainty exists when the operation condition is close to critical point.

3.3.3. Summary. According to the two verifications for compressor model, the compressor model in code SCTRAN/CO2 can predict reasonable compressor consuming power and outlet temperature. The prediction accuracy of code SCTRAN/CO2 is close to those of RELAP5-3D and GAMMA+, as well as the experiment data produced by SCO2PE facility. However, if the quasisteady compressor model is suitable for transient performance, prediction is still uncertain. The reason for not carrying out transients on analysis of compressor, turbine, or shaft is that no corresponding experimental or numerical data is found in the open literature. More transient experiments on compressor and turbine performance should be established to validate turbomachinery model in SCTRAN/CO2 in the future.

4. Initial Verification for Cycle Simulation with SCTRAN/CO2

SCO2PE (Supercritical CO_2 Pressurizing Experiment) is a s-CO_2 compressor test facility which aims to collect CO_2 compressor operation and performance data [13]. It is mainly made up of two systems, which is a primary CO_2 and a secondary water system. The CO_2 loop includes a canned motor type compressor, a heat exchanger, an expansion valve, and pipes. The s-CO_2 flow through the compressor is pressurized and heated. Then it is depressurized through the expansion valve with an isentropic process. The s-CO_2 flow leaving the expansion valve will enter the heat exchanger and be cooled by the secondary water flow. The schematic diagram of the SCO2PE loop is shown in Figure 13. The pressure ratio of SCO2PE is relatively low compared to that in the s-CO_2 Brayton cycle used for nuclear application. However, the steady and transient experiment data obtained from this facility could be used to validate steady performance of the compressor and the transient behavior of closed compressor loop.

The nodalization of SCTRAN/CO2 is shown in Figure 13. Compared to the GAMMA+ model described in [13], SCTRAN/CO2 made some minor modification in its model. SCTRAN/CO2 applies a heat flux boundary to simulate the heat exchanger for simplicity. The pressure ratio and efficiency is assumed to keep constant in the steady and transient simulation. Figure 13 shows the nodalization of SCTRAN/CO2 model and the predicted steady-state result at each node. The steady-state fluid temperature and pressure is very close to the experiment data and the result of GAMMA+.

A reduction in water cooling transient is initialized by reducing the water flow rate from 0.25 kg/s to 0.17 kg/s in 50 seconds. The water cooling reduction transient is one of the accidents anticipated in Brayton cycle cooled nuclear application. The transient simulation by SCTRAN is illustrated in Figure 14. Only the result for the first 180s is compared. At 60s, the water flow rate decreased from normal flow rate of 0.25 kg/s to 0.17 kg/s in 50 seconds. When the water flow rate starts to decrease, the average temperature of s-CO_2 in the loop increases, which further results in the loop pressure rise. Figure 14 shows the inlet and out pressure and the inlet and out temperature of the compressor. In the comparison, code SCTRAN/CO2 predicted the right parameter variation and the results are very close to the experiment data and GAMMA+ result. Compared to the experiment data, the relative error of compressor inlet and outlet pressure is within 1% while the relative error of the compressor inlet and outlet temperature is within 5%. The comparison result showed that code SCTRAN/CO2 is able to simulate the transient process of s-CO_2 closed loop.

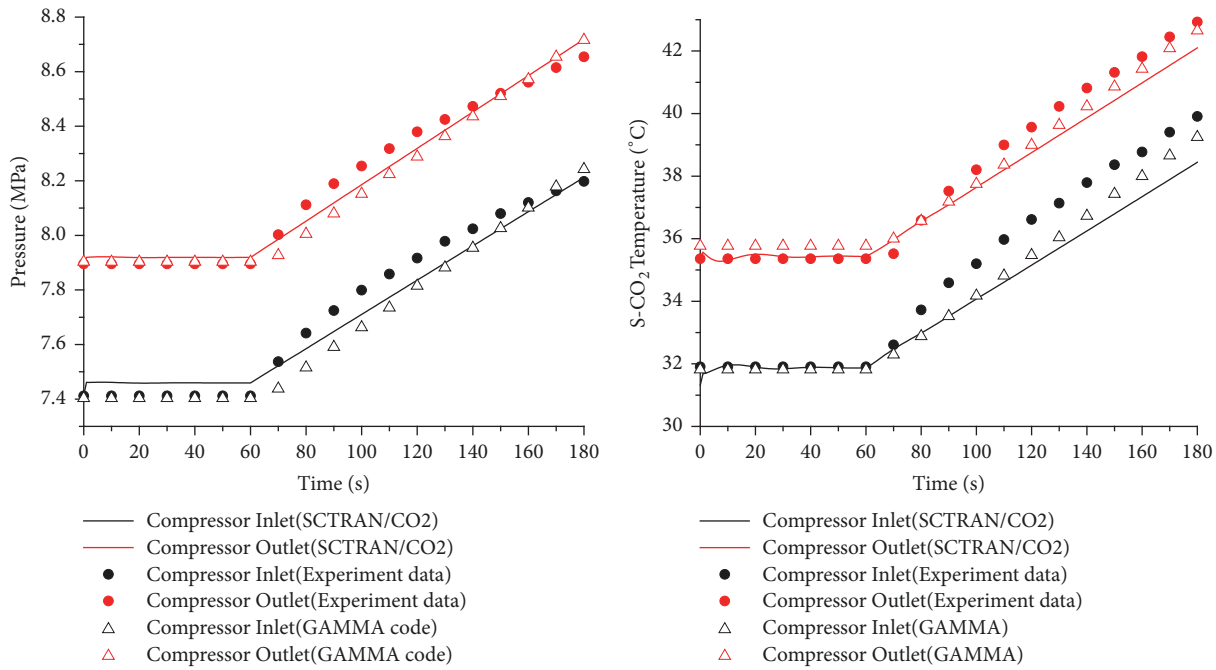

Figure 14: Pressure and temperature variation during the cooling reduction transient.

5. Present Scope of Validation and Further Work to Be Done for the Overall Validation

SCTRAN is originally a transient analysis code for supercritical water reactor (SCWR). It has been applied to carry out accident analysis and safety system design for different types of SCWR [28, 29]. Thus it is easy for SCTRAN to be updated for s-CO_2 cooled nuclear application. A lot of works on numerical algorithms, computational time step control, and convergent criteria have been studied when SCTRAN is used for supercritical water reactor. The numerical algorithms between SCTRAN/CO2 and SCTRAN are all the same. That is the reason why this part is not included in the paper. However, the time step and the mesh size should be carefully selected after sensitivity analysis. For the s-CO_2 Brayton cycle part, the transient turbomachinery model is developed and verification of transient analysis of closed s-CO_2 loop in Section 4 indicates that SCTRAN/CO2 owns the ability to do closed loop transient. For now, SCTRAN/CO2 could be used to do transient analysis and control strategy analysis for s-CO_2 Brayton cycle in any type due to the fact that the compressor, turbine, and shaft component are modeled separately. The performance of the closed Brayton cycle could be evaluated qualitatively, not quantitatively. For further validation of SCTRAN/CO2, a large amount of experiment data on transient turbomachinery performance and transient cycle operation is still in urgent need. For further application in accident analysis for s-CO_2 cooled reactor, SCTRAN/CO2 needs to incorporate an overall heat transfer package for a wide operation parameter, ranging from supercritical to subcritical pressure and high to low mass flow rate, for the fuel buddle inside the core as well as the micro flow channels of the PCHE. Only with the overall validation on these aspects, SCTRAN/CO2 could be further used for accident analysis, safety system, and control system design for s-CO_2 Brayton cycle.

6. Conclusion

A transient analysis code SCTRAN/CO2 was developed through incorporating accurate thermal property, heat transfer model and friction model for CO2, and turbomachinery model including compressor, gas turbine and rotating shaft. The initial verification work on friction model with tube experimental data and compressor model with results of RELAP5-3D was carried out to testify the code programing. The verification work on heat transfer correlation and compressor model with experimental data is to validate their applicability on s-CO_2 applications. The results of cycle simulation indicate that SCTRAN/CO2 owns the ability to simulate transient conditions for closed s-CO_2 Brayton cycle. The following conclusions can be made:

(1) The friction model in SCTRAN/CO2 was able to predict the right friction coefficient in a wide Reynolds number of 200-10^6.

(2) The Gnielinski correlation in code SCTRAN/CO2 could predict a reasonable outlet temperature of the heat exchanger which works under the operation conditions of the precooler.

(3) The compressor model of SCTRAN/CO2 could predict accurate compressor consuming power and outlet temperature, which indicate that it can be used for Brayton cycle simulation.

(4) Transient simulation of SCO2PE indicates that SCTRAN/CO2 owns the ability to conduct transient

simulations for s-CO_2 Brayton cycle. However, accurate turbomachinery performance map should be developed and incorporated into the code in the future for simple and recompression Brayton cycle analysis.

Nomenclature

A: Area/m^2
C_p: Specific heat capacity/J·(kg·K)$^{-1}$
D_h: Hydrodynamic diameter/m
f_{tp}: Friction coefficient
g_z: Gravitational acceleration/$m^2 \cdot s^{-1}$
R_e: Reynolds number
t: Time/s
V: Fluid velocity/m·s^{-1}
W: Mass flow rate/kg·s^{-1}
g: Gravity acceleration /m·s^{-2}
h: Enthalpy/J·kg^{-1}
h_l: Specific saturated liquid enthalpy/J·kg^{-1}
h_g: Specific saturated gas enthalpy/J·kg^{-1}
R_p: Pressure ratio
p: Pressure/MPa
q: Heat flux/W·m^{-2}
s: Specific entropy/J·(kg·K)$^{-1}$
z: Length/m
U: Internal energy/J·kg^{-1}
Q: Heat source/ J·kg^{-1}.

Greek Letters

ϕ: Neutron flux
η: Efficiency
τ: Torque/ N·m
μ: Dynamic viscosity/ N·s·m^{-2}
ρ: Density/kg·m^{-3}.

Data Availability

The data used to support the findings of this study are included within the article.

Conflicts of Interest

The authors declare that they have no conflicts of interest.

Acknowledgments

The authors would like to express their special thanks for the financial support from National Natural Science Foundation of China (Grant no. 11605132) and Nuclear Power Institute of China.

References

[1] Y. Ahn, S. J. Bae, M. Kim et al., "Review of supercritical CO_2 power cycle technology and current status of research and development," *Nuclear Engineering and Technology*, vol. 47, no. 6, pp. 647–661, 2015.

[2] M.-J. Li, H.-H. Zhu, J.-Q. Guo, K. Wang, and W.-Q. Tao, "The development technology and applications of supercritical CO_2 power cycle in nuclear energy, solar energy and other energy industries," *Applied Thermal Engineering*, vol. 126, pp. 255–275, 2017.

[3] D. E. Shropshire, "Lessons Learned From GEN I Carbon Dioxide Cooled Reactors," in *Proceedings of the 12th International Conference on Nuclear Engineering*, pp. 1–11, Arlington, Va, USA, 2004.

[4] M. A. Pope, *Thermal Hydraulic Design of a 2400MWth Direst Supercritical CO2-Cooled Fast Reactor [Phd thesis]*, Massachusetts Institute of Technology, 2006.

[5] M. A. Pope, J. I. Lee, P. Hejzlar, and M. J. Driscoll, "Thermal hydraulic challenges of Gas Cooled Fast Reactors with passive safety features," *Nuclear Engineering and Design*, vol. 239, no. 5, pp. 840–854, 2009.

[6] E. J. Parma, S. A. Wright, M. E. Vernon, D. Darryn et al., *Sandia's Supercritical CO2 Direct Cycle Gas Fast Reactor (SC-GFR) Concept*, Sandia National Laboratories, 2011.

[7] B. S. Oh, Y. H. Ahn, H. Yu et al., "Safety evaluation of supercritical CO2 cooled micro modular reactor," *Annals of Nuclear Energy*, vol. 110, pp. 1202–1216, 2017.

[8] J.-E. Cha, T.-H. O. Lee, J.-H. Eoh et al., "Development of a supercritical co2 brayton energy conversion system coupled with a sodium cooled fast reactor," *Nuclear Engineering and Technology*, vol. 41, no. 8, pp. 1025–1044, 2009.

[9] A. Moisseytsev and J. J. Sienicki, "Transient accident analysis of a supercritical carbon dioxide Brayton cycle energy converter coupled to an autonomous lead-cooled fast reactor," *Nuclear Engineering and Design*, vol. 238, no. 8, pp. 2094–2105, 2008.

[10] J. J. Sienicki, M. A. Smith, A. V. Moisseytsev et al., "A Small Secure Transportable Autonomous Lead-Cooled Fast Reactor for Deployment at Remote Sites," in *Proceedings of the Americas Nuclear Energy Symposium*, 2004.

[11] J.-H. Park, H. S. Park, T. Kim, and J. G. Kwon, "Transient Analysis of Supercritical Carbon Dioxide Brayton Cycle Loop for System Operation and Control," NUTHOS-11, 1–9, 2016.

[12] B. S. Oh, J. I. Lee, S. G. Kim et al., "Transient Analyses of sCO 2 Cooled KAIST-Micro Modular Reactor with GAMMA + Code," in *Proccedings of the 5th International Symposium - Supercritical CO2 Power Cycles*, vol. 2, pp. 1–18, 2016.

[13] S. J. Bae, Y. Ahn, J. Lee, S. G. Kim, S. Baik, and J. I. Lee, "Experimental and numerical investigation of supercritical CO2 test loop transient behavior near the critical point operation," *Applied Thermal Engineering*, vol. 99, pp. 572–582, 2016.

[14] A. Moisseytsev and J. J. Sienicki, "Development of a Plant Dynamics Computer Code for Analysis of a Supercritical Carbon Dioxide Brayton Cycle Energy Converter Coupled to a Natural Circulation Lead-Cooled Fast Reactor," Report number: ANL-06/27, 2006.

[15] A. Moisseytsev and J. J. Sienicki, "Investigation of plant control strategies for the supercritical CO_2 Brayton cycle for a sodium-cooled fast reactor using the plant dynamics code," Report number: ANL-GenIV-147, 2010.

[16] A. Moisseytsev and J. J. Sienicki, "Simulation of S-CO2 Integrated System Test With Anl Plant Dynamics Code," in *Proceedings of the 5th International Symposium - Supercritical CO2 Power Cycles*, pp. 1–19, San Antonio, Tex, USA, 2016.

[17] J. Floyd, N. Alpy, A. Moisseytsev et al., "A numerical investigation of the sCO2 recompression cycle off-design behaviour, coupled to a sodium cooled fast reactor, for seasonal variation in the heat sink temperature," *Nuclear Engineering and Design*, vol. 260, pp. 78–92, 2013.

[18] A. Moisseytsev and J. J. Sienicki, "Validation of the ANL Plant Dynamics Code Compressor Model with SNL / BNI Compressor Test Data," in *Proceedings of the Supercritical CO2 Power Cycle Symposium*, Boulder, Colo, USA, 2011.

[19] M. J. Hexemer, H. T. Hoang, K. D. Rahner, B. W. Siebert, and G. D. Wahl, "Integrated Systems Test (IST) S-CO2 Brayton Loop Transient Model Description and Initial Results," in *Proceedings of the S-CO2 Power Cycle Symposium*, pp. 1–172, 2009.

[20] M. J. Hexemer, "Supercritical CO2 Brayton Cycle Integrated System Test (IST) TRACE Model and Control System Design," in *Proceedings of the Supercritical CO2 Power Cycle Symposium*, pp. 1–58, 2011.

[21] M. J. Hexemer, "Supercritical Co2 brayton recompression cycle design and control features to support startup and operation," in *Proceedings of the 4th International Symposium - Supercritical CO2 Power Cycles*, pp. 1–9, 2014.

[22] N. A. Carstens, P. Hejzlar, and M. J. Driscoll, "Control System Strategies and Dynamic Response for Supercritical CO2 Power Conversion Cycles," Report number: MIT-GFR-038, 2006.

[23] N. A. Carstens, *Control Strategies for Supercritical Carbon Dioxide Power Conversion Systems [PhD thesis]*, 2007.

[24] K. J. Kimball and E. M. Clementoni, "Supercritical carbon dioxide brayton power cycle development overview," in *Proceedings of the ASME Turbo Expo 2012: Turbine Technical Conference and Exposition*, pp. 931–940, Denmark, June 2012.

[25] T. Conboy, S. Wright, J. Pasch, D. Fleming, G. Rochau, and R. Fuller, "Performance Characteristics of an Operating Supercritical CO2 Brayton Cycle," *Journal of Engineering for Gas Turbines and Power*, vol. 134, no. 11, 2012.

[26] Y. Ahn, J. Lee, S. G. Kim, J. I. Lee, J. E. Cha, and S.-W. Lee, "Design consideration of supercritical CO2 power cycle integral experiment loop," *Energy*, vol. 86, pp. 115–127, 2015.

[27] P. Wu, J. Gou, J. Shan, Y. Jiang, J. Yang, and B. Zhang, "Safety analysis code SCTRAN development for SCWR and its application to CGNPC SCWR," *Annals of Nuclear Energy*, vol. 56, pp. 122–135, 2013.

[28] P. Wu, J. Gou, J. Shan, B. Zhang, and X. Li, "Preliminary safety evaluation for CSR1000 with passive safety system," *Annals of Nuclear Energy*, vol. 65, pp. 390–401, 2014.

[29] P. Wu, J. Shan, J. Gou, L. K. H. Leung, B. Zhang, and B. Zhang, "Heat transfer effectiveness for cooling of Canadian SCWR fuel assembly under the LOCA/LOECC scenario," *Annals of Nuclear Energy*, vol. 81, pp. 306–319, 2015.

[30] V. Dostal, *A Supercritical Carbon Dioxide Cycle for next Generation Nuclear Reactors [PhD thesis]*, 2004.

[31] B. Liu, L. Cao, H. Wu, X. Yuan, and K. Wang, "Pre-conceptual core design of a small modular fast reactor cooled by supercritical CO2," *Nuclear Engineering and Design*, vol. 300, pp. 339–348, 2016.

[32] Z. Wang, B. Sun, J. Wang, and L. Hou, "Experimental study on the friction coefficient of supercritical carbon dioxide in pipes," *International Journal of Greenhouse Gas Control*, vol. 25, pp. 151–161, 2014.

[33] J. V. Meter, *Experimental Investigation of a Printed Circuit Heat Exchanger Using Supercritical Carbon Dioxide and Water As Heat Transfer Media [master thesis]*, Kansas State University, 2006.

[34] J. E. Fisher and B. D. Cliff, "RELAP5-3D Compressor Model," in *Proceedings of the Space Nuclear Conference, ANS Meeting*, pp. 5–8, San Diego, Calif, USA, June 2005.