Shock and Vibration 14 (2007) 53–64
IOS Press

The Time Delay filtering Method for cancelling vibration on overhead transportation systems modelled as a physical pendulum

G. Peláez[a,*], J. Doval-Gandoy[b], N. Caparrini[c] and J.C. García-Prada[d]
[a]*Department of Mechanical Engineering, University of Vigo, ETSII, Lagoas Marcosende 9, 36310 Vigo, Spain*
[b]*Department of Electronic Technology, University of Vigo, Spain*
[c]*Department of Natural Resources, University of Vigo, Spain*
[d]*Department of Mechanical Engineering, University Carlos III, Leganes, Spain*

Received 3 March 2006
Revised 8 June 2006

Abstract. An investigation of the response of a physical pendulum to time delay filtered inputs was conducted. It was shown that the physical pendulum model is more accurate than the simple pendulum for modelling the dynamic response of overhead cranes with loads hanging from hooks. Based on the physical pendulum model a Specified Time Delay filter for an experimental mini overhead crane was synthesized. While somewhat limited in the scope by the hardware conditions placed in the system, the results provide basic insights into the successful application of the Time Delay Filtering method to overhead cranes.

Keywords: Input shaping, time delay filtering, vibration, overhead cranes

1. Introduction

An outstanding branch of research effort in vibration control of flexible structures has focused its application on gantry cranes [1–3]. The use of gantry cranes for the safe handling of payloads requires limitation of transient sway and residual oscillation. Much of the work done up to now on crane vibration control has been based on dynamic models similar to the single-pendulum with an inflexible massless cable [4]. A double pendulum planar crane with a joint between both cable segments is proposed in [5], but the particle model for the load still remains. Hoisting of the load is taken into account by a simple pendulum model keeping the massless cable unchanged in [6]. Anyway a concentrated mass particle and a massless cable are the most appealing common options for the dynamic models of the work done until the present in feedforward crane control. However this consideration is not insignificant. For certain types of payload and riggings, the payload mass is comparable to the cable mass, or the mass hangs from a hook without a cable. If this is the case, the system behaves like a physical pendulum. For these systems the dynamics can become slightly different from a single pendulum due to the effects of inertia. There is a lack of research relative to the application of vibration control techniques with dynamic models based on physical pendulum. However this model performs better in several cases.

*Corresponding author: G. Peláez, ETSII, Lagoas Marcosende N°9, 36310 Vigo, Spain. Tel.: +34 986 81 19 64; Fax: +34 986 81 21 01; E-mail: gpelaez@uvigo.es.

ISSN 1070-9622/07/$17.00

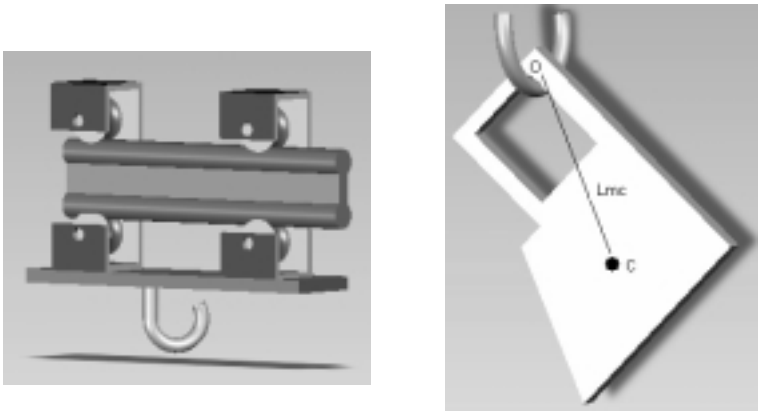

Fig. 1. (a) Sketch of an overhead transportation system. (b) Rigid solid hanging from the hook.

Overhead transportation systems feed components to warehouses and manufacturing cells in industry and mining. Such operations usually imply moving different types of solids hanging from hooks Fig. 1(a). Cancelling the transient sway avoids contact between accustomed pieces and surroundings. Cancelling the residual vibration at the end of the motion facilitates the operation of loading and unloading the pieces. All this represents a strategic advantage for the overhead transportation system. Note that the physical-pendulum dynamic model is well suited for these systems.

The natural frequency ω_n of a hanging rigid solid vibration $\omega_n = \sqrt{L_{mc}mg/I_o}$, is a function of the mass centre position L_{mc} and the pivot point moment of inertia I_o, as shown in Fig. 1(b). Both parameters change from rigid solid to rigid solid following a random distribution. For that reason the natural frequency of the hanging pieces is poorly defined and little more can be anticipated than such distribution will have a local maximum and a local minimum.

For this reason a decision was made to develop an inexpensive experimental mechanical system device representative of the flexible machines type mentioned above that would allow applying vibration control methods to cancel the sway and the residual vibration by using a physical pendulum model representative of overhead transportation systems of hanging pieces. To be a good candidate the flexible machine had to conform to four criteria:

1. It should be a simple and well-known mechanical system whose performance is limited by its flexibility. In addition, the solutions of the system's differential equations should be qualitatively known but exact equations have not been encountered before.
2. The system's frequency parameters should be easy to change in order to get a wide variety of frequency responses that will need a robust solution.
3. The system should be inexpensive and easy to build.
4. The results of the measurement should be as close as possible to the theoretical predicted values.

A Bob-rod combination was chosen as global payload for a mini-overhead crane. The main advantage for considering this system as a good candidate consist on affordable the it is a affordable installation of a sensor where the rod is pinned to the trolley in order to measure the deviation of the payload from a vertical position. In this way it is feasible to develop a fair experimental dynamic analysis of the Bob-rod physical pendulum. In addition, the natural frequency of the systems varies as the Bob changes position.

Available methods of vibration suppression include, stiffening the structure, smoothing the acceleration and deceleration ramps for a given trapezoidal velocity profile, increasing the damping of the control system, and filtering the command signals. The first two options require the addition of mass and the availability of a programmable device driver for the motor thus there are speed and cost penalties. For the last option mentioned if the filter has few coefficients the filtering process can be carried out in real time in order to generate command signals that do not excite the unwanted system dynamics. If this is the case, the type of Time Delay Filters with very few coefficients is the most appealing option for real time applications [7–9]. This paper develops a specified Time Delay Filter for the overhead mini-crane command generator that helps to reduce these problems.

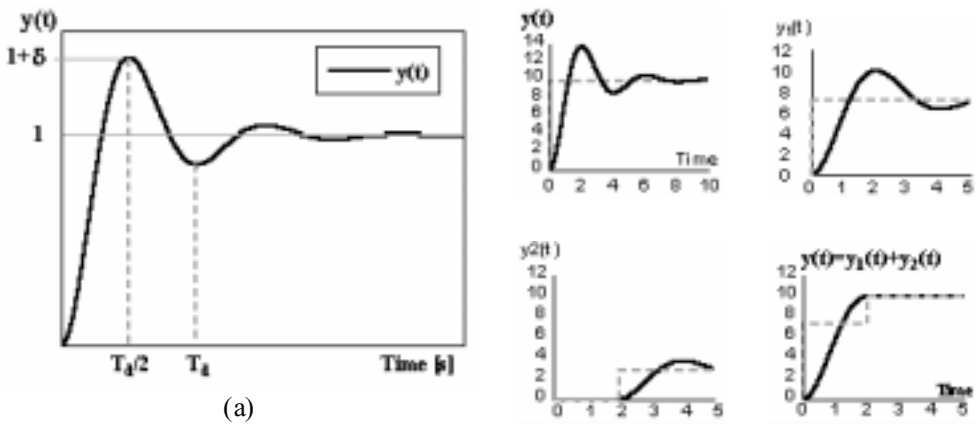

Fig. 2. (a) Step response of an underdamped system characterized by the overshoot and time period T_d. (b) The Posicast effect compared to the underdamped response: the vibration induced by the first step is cancelled by a later portion of the step. Conditions $\omega_n = 1.626$ rad s^{-1}, $\xi = 0.3$.

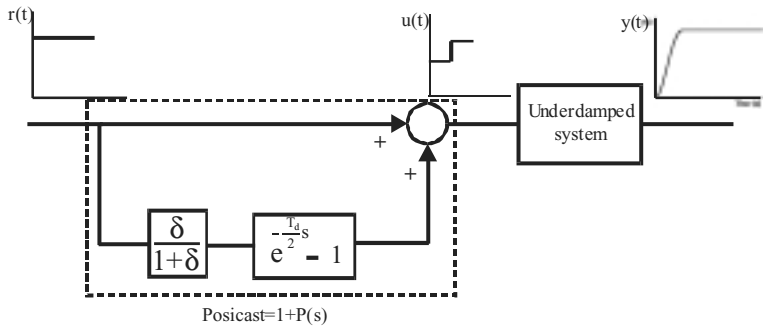

Fig. 3. The posicast feedforward control originally proposed by O.J.M Smith.

2. Time delay filtering versus input shaping, a brief review

Posicast based control, was perhaps the earliest form of Time Delay Filtering. Posicast was originally proposed by O.J.M. Smith to cancel the oscillatory behavior of under damped systems. One of the earliest textbook descriptions of Posicast can be found in Smith's 1958 book [10]. Smith showed how accurate knowledge of the system damping and damped natural frequency could be used to split a step input, thus any vibration induced by the first part of the step is cancelled by the vibration induced by a later portion of the step as shown in the overall Fig. 2. In this way Smith synthesized a feedforward dynamic compensator that cancels overshoot in the system step response Fig. 3. The equivalent time delay filter of the posicast control is composed of two impulses

$$P(s) = A_0 + A_1 e^{-\frac{T_d}{2}s} \tag{1}$$

Where, the impulses amplitudes are given by $A_0 = \frac{1}{1+\delta}$, $A_1 = \frac{\delta}{1+\delta}$ and T_d is the half period of the underdamped vibration.

In general only a simple model is used to design a posicast control. Unfortunately, posicast control is very sensitive to modelling errors; small modelling errors lead to significant levels of residual vibration. There has been an increased interest in the development of techniques to desensitize this feedforward controller to uncertainties in the system model. Singer and Seering in the late of 1990 proposed a technique named Input Shaping [11] that was able to overcome this problem later on. Input shaping is nearly the same as Time Delay Filtering. The filter coefficients are equivalent to the impulses amplitudes of a shaper. These impulses are convolved with the command and this new reference command, the shaped command, is then introduced to the mechanical system. If the system

fulfils the condition for being linear the response to the shaped command can be obtained as the sum of the response to the primary command plus the response to the sequence of impulses, the vibration caused by this sequence is given by

$$\%V(\omega,\zeta) = e^{-\zeta\omega t_n}\sqrt{(C(\omega,\zeta))^2 + (S(\omega,\zeta))^2} \tag{2}$$

Where

$$C(\omega,\zeta) = \sum_{i=1}^{n} A_i e^{\zeta\omega t_i}\cos\left(\omega\sqrt{1-\zeta^2}t_i\right) \tag{3}$$

$$S(\omega,\zeta) = \sum_{i=1}^{n} A_i e^{\zeta\omega t_i}\sin\left(\omega\sqrt{1-\zeta^2}t_i\right) \tag{4}$$

This short sequence of impulses of amplitude A_i applied to time t_i is designed to be self cancelling. And this is the primary constraint established for the design of the simplest shaper [12], the amplitude of the residual vibration caused by the sequence of impulses must sum to zero.

$$0 = \sum_{i=1}^{n} A_i e^{\zeta\omega t_i}\cos\left(\omega\sqrt{1-\zeta^2}t_i\right) \tag{5}$$

$$0 = \sum_{i=1}^{n} A_i e^{\zeta\omega t_i}\sin\left(\omega\sqrt{1-\zeta^2}t_i\right) \tag{6}$$

To minimize the time delay, the first impulse must be placed at time zero:

$$t_1 = 0 \tag{7}$$

Solving Eqs (5) (6) and (7) for the simplest case filter with only two impulses becomes a matrix of the form

$$\begin{bmatrix} A_i \\ t_i \end{bmatrix} = \begin{bmatrix} \frac{1}{1+e^{\frac{-\zeta\pi}{\sqrt{1-\zeta^2}}}} & \frac{e^{\frac{-\zeta\pi}{\sqrt{1-\zeta^2}}}}{1+e^{\frac{-\zeta\pi}{\sqrt{1-\zeta^2}}}} \\ 0 & \frac{\pi}{\omega\sqrt{1-\zeta^2}} \end{bmatrix} \tag{8}$$

where ω is the natural frequency and ζ is the damping ratio.

Using the input shaping nomenclature it is named Zero Vibration shaper (ZV) because it satisfies the condition that the residual vibration is zero when there is no error in the modelled frequency. ZV shapers are analogous to posicast control and they are also very sensitive to modelling errors and nonlinearities. To demonstrate this assessment the amplitude of the residual V(ω, ζ) vibration can be plotted as a function of the frequency modelling error. Figure 4(a) shows such a sensitivity curve for the ZV shaper. Notice that the residual vibration of the ZV shaper increases rapidly as the actual frequency deviates from the modeling frequency. This primary Input Shaping became a useful tool for many real systems when a method for incorporating robustness was developed. Before dealing with such a general method, at this point the next step in the path to attain robustness is introduced which consists of using three impulses. A typical time delay filter has such impulses number and is given by the transfer function.

$$\mathrm{TDF}(s) = A_0 + A_1 e^{-sT_1} + A_2 e^{-sT_2} \tag{9}$$

A Time Delay Filter is synthesized by minimizing the maximum magnitude of the transfer function in the region of uncertainty in the modelled frequency [13]. In addition as shown in Fig. 4(a) the TDF sensitivity curve is symmetrical because the residual vibration at the boundary and the nominal frequency are equated.

However the most straightforward method of attaining a Time Delay Filter with specified robustness in a frequency range is the technique of frequency sampling [14]. This method requires repeated use of the Eq. (2). In each case V(ω,ζ) is set less than or equal to a tolerable level of vibration, V_{tol}:

$$\%V_{tol} \geqslant e^{-\zeta\omega_s t_n}\sqrt{(C(\omega_s,\zeta))^2 + (S(\omega_s,\zeta))^2} \tag{10}$$

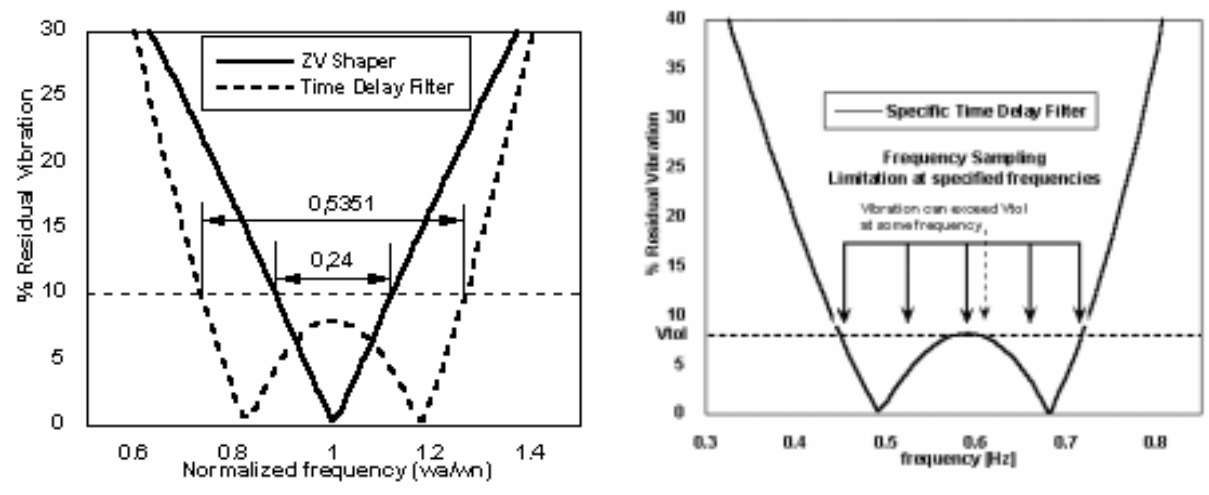

(a) (b)

Fig. 4. (a) ZV shaper and Time Delay Filter sensitivity curves. (b) Specified Time Delay Filter synthesized by the frequency sampling method.

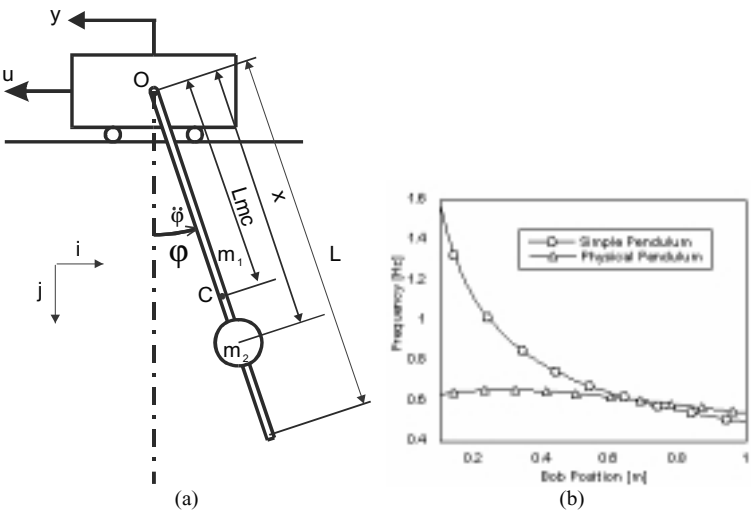

(a) (b)

Fig. 5. (a) Bob-rod physical-Pendulum Overhead Crane. (b) Natural frequency as a function of bob position –x- for a simple and a physical pendulum.

where ω_s, the sampled frequency represent the frequency where the vibration is limited.

This is the general method adopted in this work. Note that as a penalty the symmetry property is lost depending on the specified frequency range to be suppressed as demonstrates Fig. 4(b). For systems that can be modelled well mathematically, the frequency range can be calculated by simulation of the system with every expected configuration [15].

3. Bob-rod pendulum dynamics

A system for which a moderately accurate dynamic model can be constructed is generally a good candidate for implementing filtered commands that do not induce vibration in its motion. A Bob-rod payload is used here because the dynamics of this system is directly related to the bob position keeping the rod moment of inertia unchanged.

Table 1

Parameters	Values [Hz]
Insensitivity range	[0.45 , 0.70]
Differential frequency	0.0625
Frequency gap	0.25
Number of sampled points	5
2d.Frequency	0.5125
3d.Frequency	0.5750
4d.Frequency	0.6375

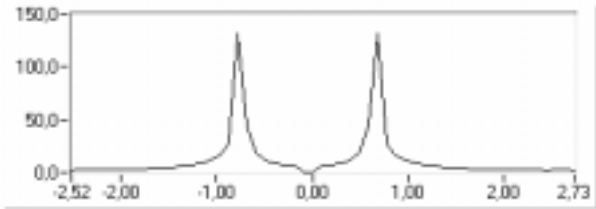

Fig. 6. FFT of the signal corresponding to the vibration of the Bob-rod physical pendulum for an intermediate bob position.

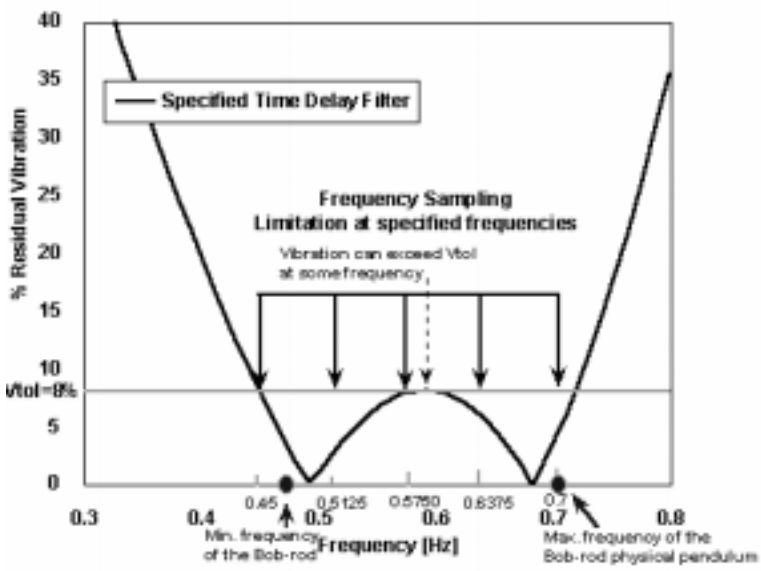

Fig. 7. Limits of the insensitivity range to be considered by the frequency sampling method to limit vibration of the bob-rod mini overhead crane.

Consequently, variations in this position lead to changes in the natural frequencies. The relative wide variations in frequency make this system representative of overhead transportation systems where the natural frequency change as the payload hanging from hooks changes according to manufacturing requirements.

The Fig. 5(a) shows a schematic representation of the Bob-rod pendulum planar overhead crane setup. The crane is moved by applying, force to the trolley in the **y** direction. A rod of length L, hangs from the trolley and supports a bob of mass m_2 attached to the rod using some type of screw. In the first approach assuming than the bob position does not change during each motion, Euler's second law leads to the equation:

$$\sum M_o = I_o \ddot{\varphi}\hat{k} + \left(\vec{r}_{oc} \times m\vec{a}_o\right)_z \tag{11}$$

peforming the cross product,

$$(m_1 g \sin\varphi \ell_{mc} + m_2 g \sin\varphi x)\hat{k} = \left(\frac{1}{3}m_1 L^2 + m_2 x^2\right)\ddot{\varphi}\hat{k} + \ell_{mc}\left(\sin\varphi\hat{i} + \cos\varphi\hat{j}\right) \times -u\hat{i} \tag{12}$$

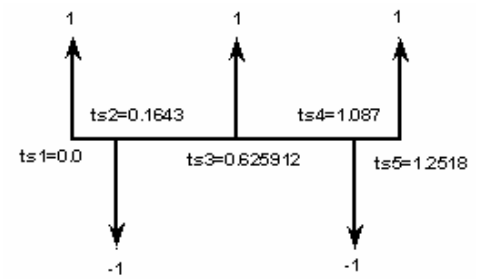

$t_{s3} - t_{s2} = t_{s4} - t_{s3}$

$t_{s3} - t_{s1} = t_{s5} - t_{s3}$

Fig. 8. The structure of the time delay filter for the overhead crane.

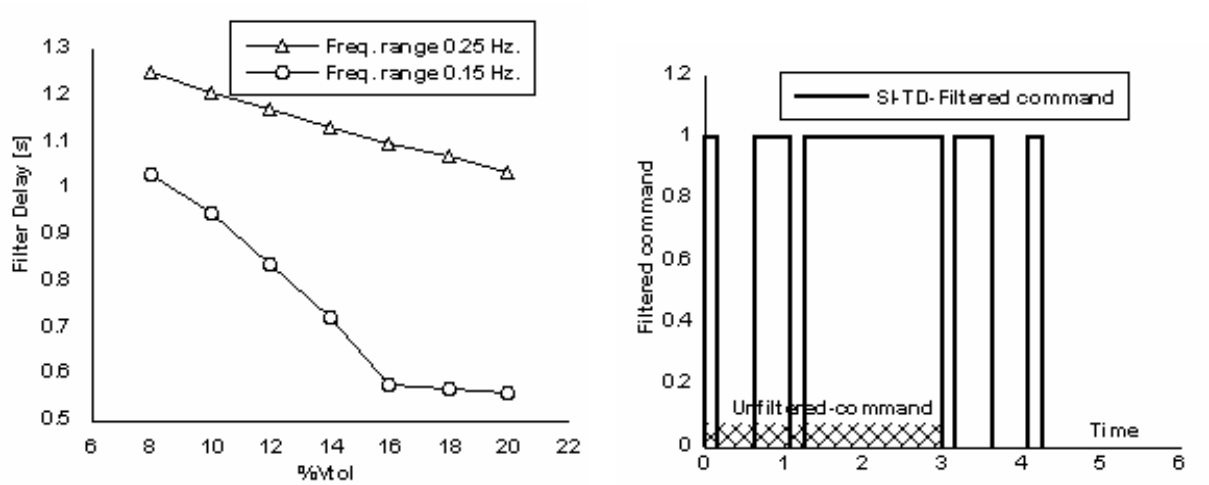

Fig. 9. (a) Effect of tolerable vibration level on Filter Delay. (b).SI-TD Filtered command.

completing this final task yields the desired differential equation

$$\ddot{\varphi} + \frac{(m_1\ell_{mc} + m_2 x)\, g}{\left(\frac{1}{3}m_1 L^2 + m_2 x^2\right)} \sin\varphi = \frac{\ell_{mc}\cos\varphi}{\left(\frac{1}{3}m_1 L^2 + m_2 x^2\right)} u \tag{13}$$

The linearized equation of motion for the system is as follows:

$$\ddot{\varphi} + \frac{(m_1\ell_{mc} + m_2 x)\, g}{\left(\frac{1}{3}m_1 L^2 + m_2 x^2\right)} \varphi = \frac{\ell_{mc}}{\left(\frac{1}{3}m_1 L^2 + m_2 x^2\right)} u \tag{14}$$

where φ is the deviation angle of the pendulum, m_1 and m_2 are the masses of the rod and the bob, x is the bob position, g is the acceleration due to gravity, and $u(t)$ is the acceleration of the trolley. If this is the case the linearized frequency of the physical pendulum is:

$$\omega = \sqrt{g}\sqrt{\frac{(m_1\ell_{mc} + m_2 x)}{\left({}^{1}\!/_{3} m_1 L^2 + m_2 x^2\right)}} \tag{15}$$

At this point allowing the change in position of the Bob, the Fig. 5(b) shows the frequency values as a function of the bob position x, when the overall length of the rod is held constant at 1 m and the mass ratio also remains unchanged (in the experimental set up $m_1/m_2 = 1.78$). The importance of the bob-rod effect on the frequency can be examined by comparing the dynamic response of the simple and physical pendulum as shown in Fig. 5(b). While for the first case as the bob position increases the frequency ω_s decays; for the second case the frequency of the physical pendulum increases until a maximum is reached and later decreases as the bob position gets lower. The maximum is carried out by requiring that the derivative with respect to the bob position of the frequency be equal to zero

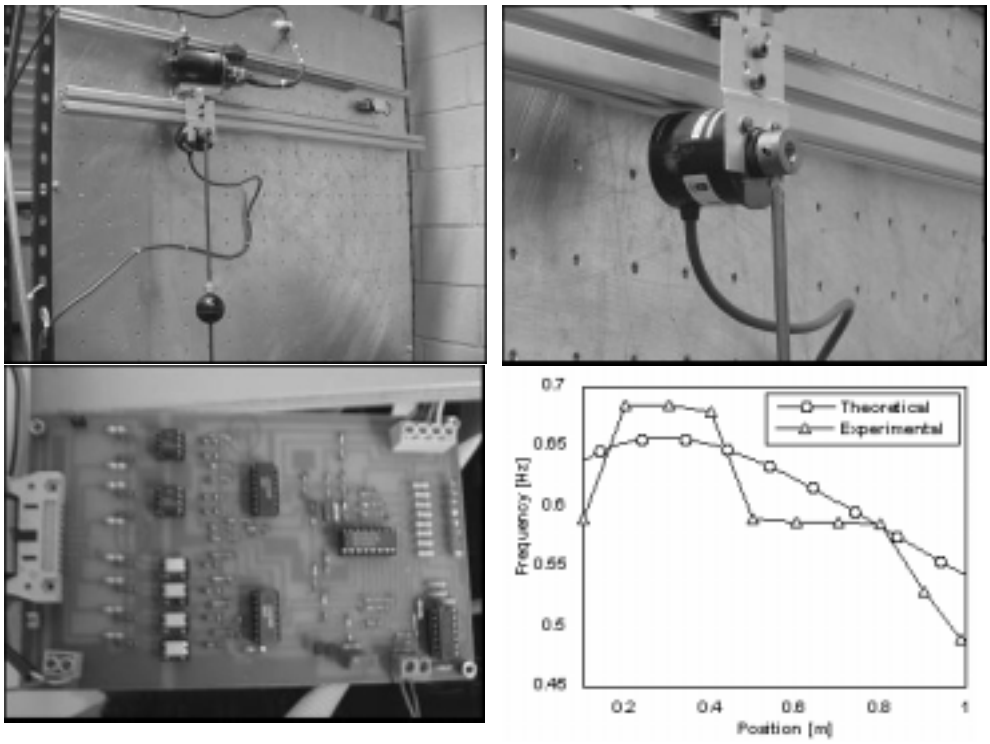

Fig. 10. (a) Experimental Set-up. (b) Absolute encoder acting as the joint between the rod and the trolley. (c) Digital to Analog converter. (d) Measured frequencies.

$$0 = \frac{d\omega}{dx} = \frac{d}{dx}\sqrt{g}\sqrt{\frac{(m_1\ell_{mc} + m_2 x)}{\left(\frac{1}{3}m_1 L^2 + m_2 x^2\right)}} \tag{16}$$

Differentiating in Eq. (16) yields

$$x^2 + 2\frac{m_1}{m_2}\ell_{mc}x - \frac{1}{3}\frac{m_1}{m_2}L^2 = 0 \tag{17}$$

Equation (17) can be solved for x. Therefore rejecting the negative root gives the position of the bob on the rod where the natural frequency has the maximum:

$$x = \frac{1}{6}\frac{-6m_1\ell_{mc} + 2\left(9m_1^2\ell_{mc}^2 + 3m_2 m_1 L^2\right)^{1/2}}{m_2} \tag{18}$$

Also as can be seen in Fig. 5(b) the natural frequency has a minimum when the bob is in the bottom of the rod. These results suggest that, the change of the natural frequency corresponding to the different payloads can be modelled with some bounds by the bob-rod combination by tuning the mechanical system parameters.

The set of parameters used here in the experimental set up are $m_1 = 205$ gr, $m_2 = 115$ gr, $L = 1$ m, and $\ell_{mc} = 0.5$ m. Evaluating Eq. (18) for such values gives $x_{\max} = 0.287$ m. The frequency corresponding to this bob position is of around 0.70 Hz. While when the bob is in the bottom of the rod the frequency goes down to the 0.45 Hz. Both frequencies are the extremes of the frequency range to be considered. The FFT (Fast Fourier Transform) corresponding to an intermediate bob position is shown in Fig. 6.

4. Specified time delay filter for the bob-rod physical pendulum

The dependence of the natural frequency on the values of bob position leads to several advantages in generating shaped commands by the Specified Time Delay Filtering method. These advantages lie in the ability of the time

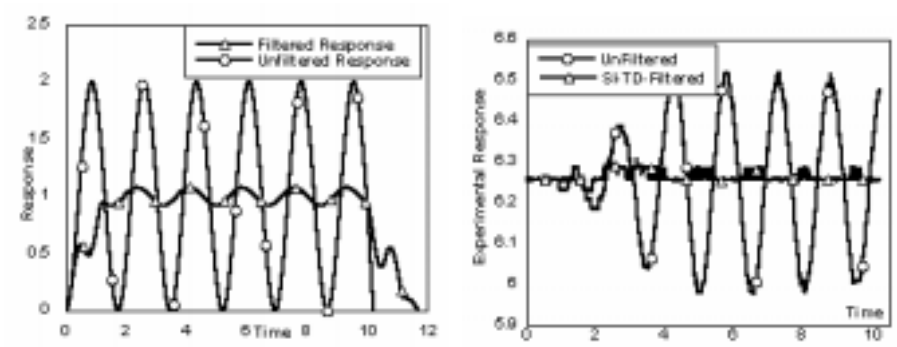

(a) Simulated response (b) Experimental response

Fig. 11. (a) Simulation response to the Specified Time Delay Filtered command and the unfiltered command 10[s] length. (b) Experimental response of the mini-overhead crane without residual vibration.

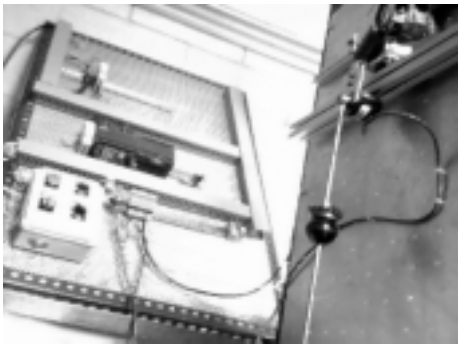

Fig. 12. Command Generator based in a simple PLC.

delay filter designed by this method to satisfy exactly the following requirements: 1) Commands compatible with the actuator type, 2) Frequency range to be suppressed, 3) Tolerable level of vibration amplitude.

1) Here it is considered a constant amplitude actuator type. The reference signal can take only two levels and the commands are on-off. If this is the case the amplitudes of the Time Delay Filter impulses must switch between 1 and -1:

$$A_i = (-1)^{i+1} \cdot \ldots, i = 1 \ldots n \tag{19}$$

When this filter constraint is used with step inputs leads to commands that will not exceed the magnitude of the step. This is a very good property because saturation of the actuator does not take place and also a wide variety including low cost physical actuators are amenable to implement this type of filtered commands. For these reasons it is the choice in the Bob-rod mini overhead crane set up thus a driver for the motor is not available nor installed and a simple relay performs the switching task.

2) To design a Specified Time Delay Filter the range of frequency for suppression, must be established. A significant feature of the Bob-rod pendulum is the presence of a frequency maximum. This facilitates the specification of the top frequency that coincides with such maximum. The low frequency of the insensitivity range is defined by the associated frequency to the bottom position of the bob in the rod. The Fig. 7 shows both limits of the insensitivity range.
3) The tolerable level of residual vibration amplitude V_{tol} should not be higher than the 10% of the amplitude of the unfiltered command.

The requirements above given made up good initial guesses for the optimization routines of General Algebraic Modelling System (GAMS) program used here to solve constraint Eqs (10) and (19). The method requires repeated

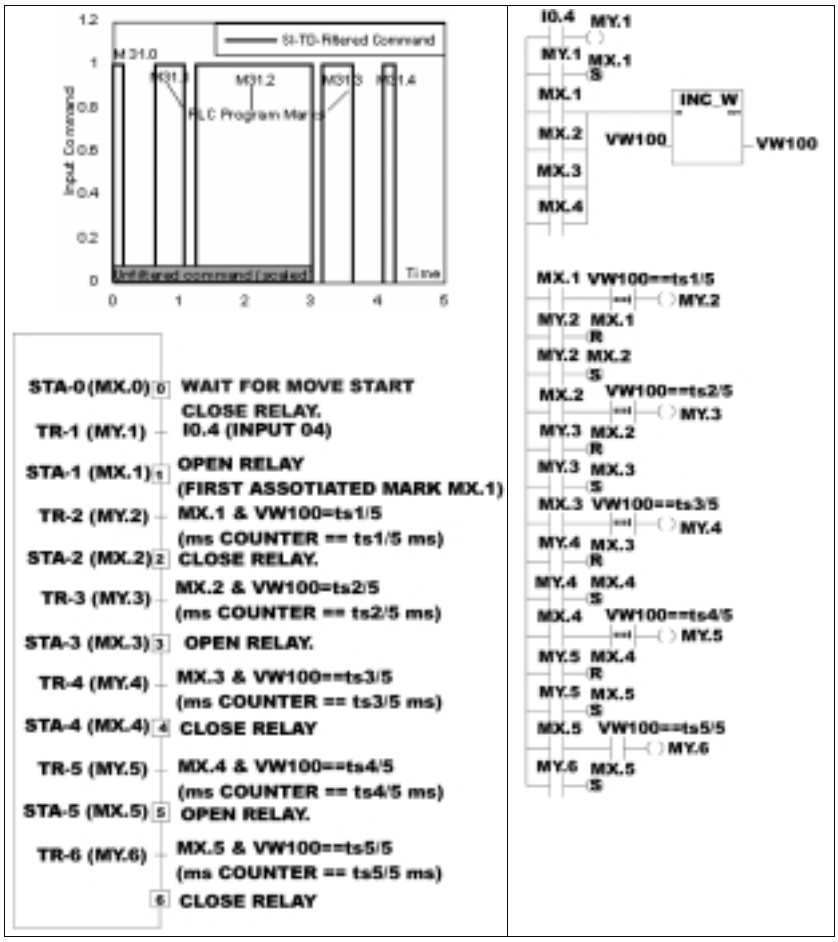

Fig. 13. (a) Petri Network designed for the filtering process. (b) Relay ladder program corresponding to the Petri Network for the temporized interrupt routine.

use of Eq. (10) at the five sampled frequencies where the vibration is limited. Details of the frequency sampling developed are given in Table 1. There are multiple solutions for this set of constraints varying the number of impulses and associated times. The solution which yields the shortest delay is the unique time optimal solution. The GAMS minus solver converges for a minimum number of five impulses and a minimum Vtol level of the 8% for the frequency range to be suppressed, leading to a numerical solution for the time delay filter given by Fig. 8.

Note that the 5 impulses are antisymmetric about the third impulse t_{s2}–$t_{s1} = t_{s5}$–t_{s4}, $t_{s3} - t_{s2} = t_{s4}$–t_{s3}. This is a well balanced solution in the sense that the total time delay and the tolerable vibration level are the shortest possible. If the last one is set too high then the time delay filter might not limit the vibration to below the desired deviation angle of the overhead crane. On the other hand if this level is set smaller, then the delay induced by the filter will be longer. The effect of the tolerable vibration level on the filter delay is shown in Fig. 9. As can be seen as the tolerable vibration level decreases the delay induced by the filter in the command increases. For a given tolerable vibration level a small increase in insensitivity will result in a quite valuable increase in the time delay induced by the filter. As demonstrates both curves of Fig. 9(a) for a 10% of tolerable vibration level when the frequency range width increases by 10 Hz then the time delay increase is of around 3 seconds.

When the optimal solution found is convolved with a step input of 3 seconds length, the resulting command is increased by the size of the filter (1.25 s), as shown in Fig. 9(b).

5. Experimental results

The apparatus used to experimentally demonstrate the undamped bob-rod pendulum oscillations is composed of an OMRON absolute encoder EGCP-AG5C-C (resolution 256/360°) whose axis acts as the pin between the rod and the trolley as shown in Fig. 10(a). This join is shown in detail in Fig. 10(b). Also a board was built to convert the data given by the encoder in gray code into an analog signal shown in Fig. 10(c). This sensor which supplies the signal corresponding to the deviation angle was interfaced with our computer which allows us to write our own virtual instrument to analyse the vibration.

The experimental results reinforce the notion that a frequency maximum takes place for a bob position on the rod of around 0.3 m as shown in Fig. 10(d), while the minimum frequency corresponding to the bob position at the bottom of the rod should not be lower than 0.45 Hz according to the experimental results.

To verify the proposed SI-TD Filter the overhead crane system response to the filtered command was simulated along the trolley motion for duration of 10 seconds as shown in Fig. 11(a). The nominal value of the natural frequency was set to 0.57 [Hz]. It can be seen that the proposed filter is robust and achieves the trolley positioning with a very low residual vibration of around the 8% as expected according to the filter design. This response is compared with the unfiltered response in Fig. 11(a). To verify the simulation results an experiment was conducted on the mini-overhead crane (MOVC) testing the designed SI-TD Filter. The MOVC was run in a 1.5 meter horizontal line through the workspace. The collected data about the deviation from the vertical position of the bob-rod was performed by logging the absolute encoder signal. The response of the physical pendulum to the filtered and unfiltered commands can be seen in Fig. 11(b). The unfiltered command caused an oscillation of the load of around 10° during the motion. This type of oscillation could damage the payload in an industrial environment. It can also be seen that the SI-TD-Filtered command eliminated such oscillation of the physical pendulum. Only a small amount of vibration due to some hardware uncertainties still remains, but few objections can be made to these results.

The command generator hardware for the mini-overhead crane is based on a simple Siemens S7-214 Programmable Logic Controller as shown in Fig. 12. Outside of the scan cycle a temporized interrupt routine with a base time of 5ms was set up. Each time the controller executes the subroutine a millisecond (ms) counter is increased. Noting that the values of the ms counter are multiples of 5 ms, a transition of the Petri network is accomplished when the ms counter reaches one of the impulse times. In each place of the Petri network the developed action simply consist in switch on or switch off an internal position memory named “mark” in the Siemens notation. A collection of marks or memory positions conducts the status of the output relay. The overall Fig. 13 shows the associated marks for each of the pulses of the filtered command. But what performs such a task activating the relay when any one of the associated marks MX.i is switched on is a conventional subroutine included in the scan cycle. Also the outputs are activated or deactivated in only one subroutine to attain a modular program for drive the gantry crane.

6. Conclusions

An investigation of the response of a physical pendulum to time delay filtered inputs was conducted. It was shown that the physical pendulum model is more accurate than the simple pendulum for modeling the dynamic response of overhead cranes with loads hanging from hooks. Based on the physical pendulum model a Specified Time Delay filter for an experimental mini overhead crane was synthesized. While somewhat limited in the scope by the hardware conditions placed in the system, the results provide basic insights into the successful application of the Time Delay Filtering method to overhead cranes.

References

[1] R.L. Kress, J.F. Jansen and M.W. Noakes, *Experimental Implementation of a Robust Damped-Oscillation Control Algorithm on a Full Sized*, Two-DOF, AC Induction Motor-Driven Crane. In 5th ISRAM. 1994. Maui, HA.

[2] M.W. Noakes and J.F. Jansen, Generalized Inputs for Damped-Vibration Control of Suspended Payloads, *Robotics and Autonomous Systems* **10**(2) (1992), 199–205.

[3] N. Singer, W. Singhose and E. Kriikku, *An Input Shaping Controller Enabling Cranes to Move Without Sway*, In ANS 7th Topical Meeting on Robotics and Remote Systems. 1997. Augusta GA.

[4] H. Butler, G. Honderd and J.V. Amerongen, *Model Reference Adaptive Control of a Gantry Crane Scale Model*, IEEE Control Systems, January 1991, 57–62.
[5] M. Kenison and W. Singhose, *Input Shaper Design for Double-Pendulum Planar Gantry Cranes*, IEEE Conference on Control Applications. 1999.
[6] W. Singhose, L.J. Porter and W.P. Seering, *Input Shaped Control of a Planar Gantry Crane with Hoisting*, Proceedings of the American Control Conference, Albuquerque, New Mexico June 1997.
[7] G. Peláez and W. Singhose, *Implementation of Input Shaping on flexible machines with integer controllers*, 15Th Triennial World Congress of the IFAC, Barcelona, 2002.
[8] G. Peláez, W. Singhose and A. Vizán, *Input Shaping Tool Head Pneumatic Actuator Commands to Reduce Cut Car Letter Flexible Machine Vibration*, Proceeding of the WSEAS International Conference ISPRA, Cadiz 2002.
[9] J. Lawrence, G. Peláez and W. Singhose, *Input Shaping for a Flexible, Nonlinear, One-link Robotic Arm with Backlash*, Japan-USA Symposium on Flexible Automation, Denver, Colorado, 2004.
[10] O.J.M. Smith, *Feedback Control Systems*, McGraw-Hill, 1958, 331–345.
[11] N.C. Singer and W.P. Seering, Preshaping Command Inputs to Reduce System Vibrations, *ASME Journal of Dynamic Systems Measurement and Control* **112** (1990), 76–82.
[12] N.C. Singer, *Residual Vibration Reduction in Computer Controlled Machines*, MIT Artificial Intelligence Laboratory Technical Report Number AITR-1030, MIT Artificial Intelligence Lab, 1989.
[13] T. Singh and S.R. Valadi, Robust Time-Delay Control of Multimode Systems, *International Journal of Control* **62**(6) (1995), 1319–1339.
[14] N.C. Singer and W.P. Seering, (1992) *An Extension of Command Shaping Methods for Controlling Residual Vibration Using Frequency Sampling*, In: IEEE International Conference on Robotics and Automation. Nice, France 1992, 800–805.
[15] G. Peláez, N. Capdrrini Marin and J.C. García-Prada, Two impulse sequence input shaper design for link mechanisms with nonlinearities, submitted and accepted to the 2007 American Control Conference.