Shock and Vibration 19 (2012) 825–833
DOI 10.3233/SAV-2012-0691
IOS Press

Characterization and classification of modes in acoustic emission based on dispersion features and energy distribution analysis

M.A. Torres-Arredondo* and C.-P. Fritzen
Center for Sensor Systems, Institute of Mechanics and Control Engineering-Mechatronics, University of Siegen, Siegen, Germany

Abstract. Acoustic Emission (AE) techniques are used for the structural health monitoring of civil, aeronautic and aerospace structures. Recently, these structures are made of composite materials due to their advantages over traditional materials, but this increases the interpretation complexity of the failure modes present. Therefore, in order to make AE a trustworthy technique, reliable source location and damage mechanism characterization must be accomplished. On that account, this work proposes a novel approach based on a chirplet atomic decomposition, time-frequency energy distribution and dispersion analysis, where the failure-emitted signals are separated from extraneous noise and the detected modes are analyzed according to their dispersive behaviour and angular dependence characteristics. Dispersion relations are obtained by the use of a higher order plate theory on a non-absorbing anisotropic plate model, and then used in conjunction with the previous methodologies for mode identification and localization. The proposed methodology and model are validated, and the capability of the method to overcome practical issues encountered in AE testing is demonstrated experimentally.

Keywords: Structural health monitoring, acoustic emission, structural dynamics, signal processing

1. Introduction

The use of composite materials has extensively increased in the design of existing engineering structures, which also increases the analysis complexity of such structures. Acoustic emission testing (AET) has been proposed as a structural health monitoring technique due to its ability to locate sources of energy release from within a structure related to undergoing damage processes. The global and local monitoring capabilities of AE make it a valuable tool in order to get information regarding the origin and importance of a discontinuity in a structure for a longer safe life and lower operation costs [1]. However, much information and analysis regarding the generation and propagation of acoustic emission signals in composites is needed before AE techniques can provide useful information for reliable fault monitoring. For this reason, the proper design of automatic fault detection algorithms becomes the backbone in the application of trustworthy quantitative methods for source mechanism characterization and damage detection. There is no shortage of techniques in the literature regarding AE techniques. Ziola and Gorman [2] investigated the localization of synthetic AE sources using a technique based on cross-correlation in thin plates. Gaul et al. [3] developed a model experiment to identify the exact location of AE events generated by a short local thermal expansion on the surface of a fatigue specimen on the basis of wavelet analysis. These investigations made use of flexural waves and did not extend their procedures to other type of waves. Other notable work in the field is given by Holford in [4]. More recent investigations have led to the development of algorithms that allow the localization by learning the relation between arrival times to the sensors and source location such as the work presented by Baxter et

*Corresponding author: M.A. Torres-Arredondo, University of Siegen, Center for Sensor Systems, Institute of Mechanics and Control Engineering-Mechatronics, Paul-Bonatz-Strasse 9-11, 57076 Siegen, Germany. E-mail: torres@zess.uni-siegen.de.

ISSN 1070-9622/12/$27.50

al. [5] and a later improvement of this technique proposed by Hensman et al. [6] using Gaussian processes in complex structures. The drawback faced with these methods is that the calculation of the arrival times, needed for the creation of the so-called ΔT maps or training the Bayesian estimator, is done irrespective of the detected mode leading to potential errors in localization and do not provide an insight of the present failure modes.

The present work introduces a robust approach for the automatic classification and localization of acoustic emissions where pencil lead breaks were used to simulate acoustic emission signals representing modes of failure in a plate-like anisotropic structure. The AE signal-to-noise ratio (SNR) is improved by means of wavelet analysis and a matching pursuit algorithm is applied for an optimized signal decomposition of the AE waveforms based on chirplet atoms. A statistical onset-picker is used to estimate the wave arrival and dispersion analysis is then conducted on the decomposed signal in conjunction with quadratic time-frequency analysis so that the frequency content is extracted and the energy orientation examined in order to classify the detected modes of propagation in the recorded signals, and then select a common mode to the sensor network. By recognizing and identifying the dominant modes of propagation in the received AE waveform then it would be possible to discriminate between damage types. The antisymmetric wave modes with dominant out of plane motion will interact more strongly with damages lying parallel to the plane of the wave propagation such as delaminations, skin or core debonding and impact damage. The symmetric wave modes with dominant in-plane motion will be more strongly related with damages lying perpendicular to the plane of wave propagation such as matrix cracking, matrix splitting and core crushing [7]. Thus, by carefully analyzing the dispersive characteristics of the signals or by the application of advanced pattern recognition methods the identification of the failure modes with different type of damage mechanism could be accomplished [8,9]. The focus on classification of AE events is based on the dispersive energy attributes of the wave packets constituting the waveform.

2. Model description

The modeling of wave propagation in multilayered anisotropic structures has been extensively studied by several researchers and a considerable amount of literature has been published on this topic [10]. Analyzing guided waves in these structures is often categorized into three groups. They are methods based on three dimensional elasticity, waveguide finite element methods and laminated plate theories of different orders. The latter method, however, provides greater computational savings over the others and accurate solutions in the lower frequency range. Moreover, the low frequency range is the most used in Lamb wave applications for structural health monitoring where just the fundamental S_0 and A_0 modes of propagation are present and the influence of higher order modes of propagation is avoided in order to facilitate the analysis of the recorded signals. The fundamental symmetric mode S_0 is typically used for detection of transverse cracks, while the fundamental antisymmetric mode A_0 is used for detection of delamination.

A laminated plate theory expanding the displacement fields in terms of the plate thickness z to a second order is proposed here. First order normal strains and second order shear strains are taken into consideration in order to account for transverse shear deformation, rotary inertia and to provide a better approximation of the extensional wave motion [11]. Figure 1 depicts the definition of stress resultants (N, M, Q) in the three dimensional system for a given propagation direction θ and fiber orientation φ.

The approximated displacement fields are given by

$$\begin{aligned} u &= u_0(x,y,t) + z\psi_x(x,y,t) + \frac{z^2}{2}\phi_x(x,y,t) \\ v &= v_0(x,y,t) + z\psi_y(x,y,t) + \frac{z^2}{2}\phi_y(x,y,t) \\ w &= w_0(x,y,t) + z\psi_z(x,y,t) \end{aligned} \tag{1}$$

where u, v, and w are the displacement components in x, y and z directions, ψ_x and ψ_y represent rotations having the same meaning as in the first order shear deformation theory [12]. The additional terms expand the displacement field.

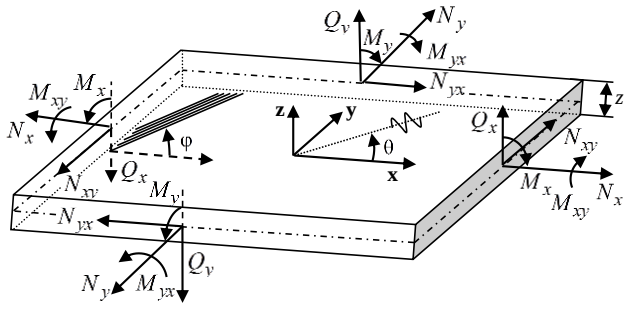

Fig. 1. Complex stress system in three dimensions.

The constitutive equations may be derived from the strain energy density in the 3-D elasticity theory and the linear elastic stress-strain and strain-displacement relations. Consequently, the system can be expressed in a matrix form, and by imposing boundary conditions and setting its determinant to zero, a characteristic function relating the angular frequency to the wavenumber is obtained. Finally, dispersion curves can be plotted by finding the proper values that satisfy the characteristic function. Due to lack of space, the detailed derivation of the constitutive equations and algorithms are not presented here. A detailed description of the numerical strategy for the tracing of the dispersion solutions and the complete analytical expressions are presented in [13,14]. An example of this approach for a 1.46 mm glass fiber reinforced plastic (GFRP) with very low attenuation characteristics is presented in Fig. 2.

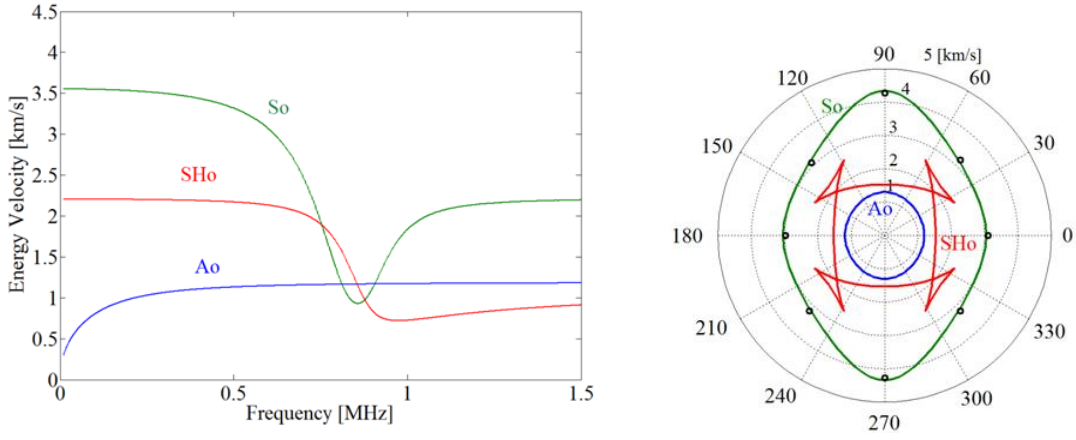

(a) (b)

Fig. 2. Propagation modes: (a) energy velocity dispersion curve and (b) wave surface for a common GFRP.

The calculated energy velocities at θ = 45 °are depicted in Fig. 2a. It can be seen that the behaviour of the SH_0 and S_0 modes is different from the A_0 mode in both the low and high frequency zones. In the relatively low frequency range it can be seen that the higher the frequency of the A_0 mode, the faster its energy velocity. In an opposite manner for the S_0 mode, the higher its frequency, the slower its energy velocity. As it can also be inferred from the wave curve plot (Fig. 2b) that the material possesses a high degree of anisotropy. These energy characteristics of the modes will be analyzed in order to distinguish the recorded modes in a defined frequency range where their characteristics are noticeable, e.g., in the relatively low frequency range. The wave surface for the S_0 mode at 200 kHz is shown in comparison with some measured values at discrete angular points (black circles) in order to validate the analytical model with experimental data. It can be seen that the estimated energy velocity matches the theoretical curve very well, demonstrating the effectiveness of the model.

3. Signal conditioning and onset time detection

AE based techniques require automatic and intelligent techniques in order to separate the failure-emitted signals from noise and accurately localize and characterize the source of emission. Digital filters have been extensively used in non-destructive testing for signal conditioning, but they can introduce changes to the signals in form of precursory signals, phase distortion in case of being ill-defined and amplitude modification [15]. This poses a great disadvantage since wave theories cannot be properly applied for the analysis of the distorted acoustic emission waveforms and the propagation velocities for reliable source localization and signal characterization. Therefore, the selection of appropiate conditioning techniques plays an important role in the successful analysis of the failure-emitted signals. In order to fulfill this requirement, the discrete wavelet transform on the basis of the two-channel subband coding scheme as proposed by Mallat [16] was applied to the noisy signal in order to produce the noisy wavelet coefficients to the level in which the signal was properly distinguished. Special attention was paid to the selection of the optimum decomposition level in order to avoid removing important information that could be related to some of the modes of propagation contained in the signal. Wavelet packet transform was used and evaluated for this purpose. The optimum number of level decompositions was determined based on both a minimum-entropy decomposition algorithm [17] and systematic trials. The family of Daubechies wavelets ('db8') was carefully chosen for this study since it proved to be adequate to encode and approximate the AE waveforms. The chosen db8 wavelet is an orthogonal wavelet with the advantage of avoiding phase shifts and allowing exact reconstruction of the signal. Furthermore, power spectral analysis was carried for analysis of the noise. After this analysis, it was assumed to be random noise. Similarly, the discrete wavelet-based energy decomposition was used to study the AE attenuation in the composite plate. The performance of automatic onset-pickers used for source localization is affected a great deal by the SNR and therefore, the improvement of the SNR plays an important role in mode detection and localization. The determination of the onset time of a transient signal is then a very important task in AET. For this study, a statistical picker based on the Akaike Information Criterion (AIC) was appraised and used since it provides picks with higher accuracy in comparison to traditional threshold methods, cross-correlation methods, and energy based detectors. The AIC picker definition is given by Kurz et al. [18]

$$AIC(t) = t\log_{10}(\mathrm{var}(x[1,t])) + (T-t-1)\log_{10}(\mathrm{var}(x[t+1,T])), \tag{2}$$

where var denotes the sample variance, T is the last sample of x where the onset is contained, and t ranges through all the samples of x. The AIC picker models the noise and signal as two different stationary time series and its minimum indicates the point of separation of the two series (onset point). The result of applying the two-channel subband coding algorithm and onset time picker to an AE signal contaminated by high frequency noise is shown in Fig. 3.

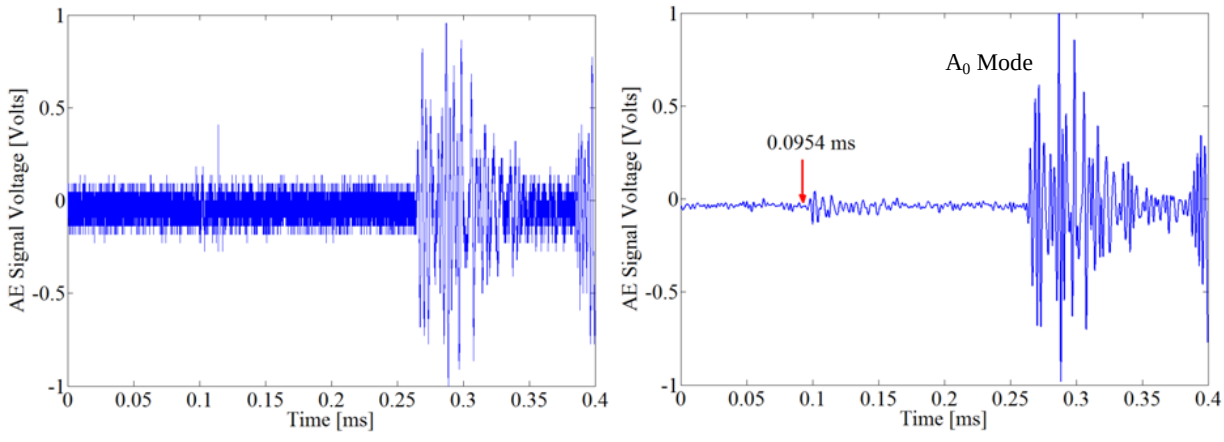

(a) (b)

Fig. 3. Lamb waves: (a) noisy AE signal and (b) denoised AE signal and estimated onset time.

The example above is presented in order to exhibit the capabilities of the proposed techniques for denoising and onset detection in an anisotropic plate (Fig. 3). The signal was generated by exerting a pencil lead break on the surface of the plate at a relatively close distance to the sensor. It is worth noting that the amplitude of the A_0 mode is much larger than that of the S_0 mode for the 1.46 mm GFRP plate (Fig. 3b). According to this observation, if the source spectrum of the S_0 mode contains no significant low frequency components, there will be a critical distance beyond which this mode cannot be detected by some sensors in the network. In a similar way, if the detected modes overlap and interfere, discrimination of wave propagation modes becomes very complex and special decomposition techniques should be used so that the present modes can be classified. As a result, these effects will introduce potential errors in the source localization and characterization scheme since the onset time predictions do not correspond to the same picked mode in the sensor network. An approach to overcome this problem is presented in the following section.

4. Signal decomposition and energy analysis

A major difficulty in acoustic emission is the analysis of broad-banded signals and discrimination of the modes contained in the recorded signals. The matching pursuit algorithm (MAP) was chosen in this study for the atomic decomposition of AE waveforms focused on the ability of the method to classify between modes based on dispersive energy characteristics. The MAP was introduced by Mallat and Zhang [19] and has been successfully applied in SHM by different researchers. It is an iterative algorithm that decomposes a signal into a linear combination of waveforms, so-called atoms, that are selected from a redundant database of atoms, named dictionary, having similar time and frequency characteristics to the original signal, in our case, the AE waveforms. The atom from the dictionary that locally better defines the signal is then selected for reconstruction. The first step of the algorithm is to create a redundant dictionary D of atoms g which are well localized in time and frequency, and possess unit energy. The second step is to find the best match from the dictionary where the residuum $r_0(t)$ equals the sensor signal $s(t)$ for the first iteration according to

$$g_i = \arg\max_{g \in D} |\langle r_{i-1}, g \rangle|. \tag{3}$$

The third step is to compute the residual after subtracting the component along the best atom in Eq. (3)

$$r_i = r_{i-1} - \langle r_{i-1}, g_i \rangle g_i. \tag{4}$$

Finally, the second and third steps are repeated until a maximum number of iterations n is met or a predefined energy threshold of the original signal is reached. The signal can be finally reconstructed according to

$$s = \sum_{k=0}^{n-1} \langle r_k, g_k \rangle g_k + r_n. \tag{5}$$

The proposed dictionary is composed of chirplet atoms which are well suited for the analysis of dispersive signals with no stationary time-frequency behaviour [20]. The chirplet atom is given by

$$g_k(t) = \frac{1}{\pi^{0.25}\sqrt{s_k}} \exp\left(-\frac{1}{2}\frac{(t-t_k)^2}{s_k^2} + \mathrm{i}\left(\omega_k (t-t_k) + \frac{\beta_k}{2}(t-t_k)^2 \right) \right), \tag{6}$$

where the parameters s_k, t_k, ω_k, and β_k indicate the time extent, time center, angular frequency center, and the linear frequency modulation rate respectively. In case of passive monitoring of stress waves, the dictionary can be chosen with knowledge regarding the recorded signals. To achieve maximum resolution in time shift, the time translations t_k are selected depending on the sampling interval. The angular frequency ω_k should lie in between the frequency range of the antialiasing filters. The s_k and β_k are optimized by finding the optimal values that lead to a better match

in the neighborhood of the initial set of parameters. This strategy significantly improves the resolution of the decomposition without increasing the size of the dictionary. In this context, a small dictionary refers to a coarse discretization step of the parameters controlling the chirplet atoms contained in it. It is well known that a smaller discretization interval of the control parameters produces a large number of functions which usually provide a better decomposition in terms of matching the signal. Nevertheless, as the size of the dictionary increases the computational effort also increases. Therefore, the goal of the proposed numerical implementation is to improve the decomposition performance without increasing the size of the dictionary. The dispersion knowledge gained with the proposed plate theory in combination with spectral analysis in the frequency domain and the knowledge of excitability functions can help in the development of a dictionary with optimal control parameters for the signals. However, if the dictionary is built with arbitrary signals with no relation to the physics of the underlying signals, then the interpretations gained with the decomposition could lead to incorrect inferences. The proposed algorithm allowed to reduce the number of iterations required for the algorithm convergence from the order of some hundreds to the order of few tens. Nevertheless, the computational time is also directly related to the number of waveforms occurring in the signal, i.e. the higher the velocities of the wave modes and the lower the attenuation of these modes, the more reflections will be contained in the signal for a fixed time window and the higher the computational cost. Once the decomposition has been done, an energy distribution can be defined in the time-frequency plane without the interference terms obtained with conventional time-frequency representations (TFR). As a result, this technique will provide a clearer picture of the energy distribution with well defined clusters of concentrated energy in comparison to traditional smoothed representations. Moreover, since the parameters of every matched atom are known, no special post-processing is required for the analysis. Finally, based on the observations made in Section 2 regarding the energy velocity distribution, it can be concluded that atoms with a positive frequency modulation rate are related to the S_0 mode, and conversely, atoms with negative frequency modulation to the A_0 mode. Once the onset time of the recorded signals is estimated, the atom with same time arrival characteristics is extracted and analyzed for classification according to the interpretation presented above. The authors did not concentrate only in the Ao mode since they are interested in the analysis of the different modes of propagation contained in the signals and their correlation with possible damage mechanisms.

5. Experiment and discussion

In order to check the performance of the proposed methodology, a specimen was made from a 1.46 mm unidirectional GFRP laminate of dimensions 800 × 350 mm. For the present experiment, four broadband AE sensors (VS900-M by Vallen Systems) were installed on the plate and vacuum silicon grease was used to improve the signals transmission between specimen and sensors. The sensors were fixed to the structure by means of magnetic clamps. The nominal material parameters of the layer are the following: $E_1 = 30.7$ GPa, $E_2 = 15.2$ GPa, $G_{12} = 4$ GPa, $G_{13} = 3.1$ GPa and $G_{23} = 2.75$ Gpa. The density is approximately 1700 kg/m^3. The experimental setup consisted of AEP3 amplifiers (Vallen Systems), a four channel HS4 handy-scope from TiePie Engineering and a PC. The amplifier gain was set to 34 dB, the antialiasing lowpass and highpass cut-off frequencies were adjusted to 95 kHz and 800 kHz, and the signals were recorded with a sample frequency of 50 MHz. The experimental setup for the collection of AE data and a typical signal from a pencil lead break containing wave packets related to the fundamental symmetric and antisymmetric modes of propagation are depicted in Fig. 4.

In practice larger dictionaries provide better performance for signal processing but the algorithm running time can be excessive. For the implementation procedure in this work a dictionary of chirplet atoms was build, which was small but sufficient by adaptively choosing the parameter space of the chirplet decomposition based on the spectrum of the signals to be decomposed. This design led to a fast algorithm and reduced the computational cost produced by defining a large redundant dictionary. The decomposition was set to a threshold value of 98 per cent of the original signal energy. It is well known that acoustic emissions occur in such a fast succession that signals of different frequencies and amplitudes superpose each other. An example of this effect is given below in Fig. 5 in order to illustrate the full chirplet decomposition process and its ability to decode overlapping packets in the presence of noise. The signal was produced by a pencil lead brake at a radial distance of 200 mm from the sensor number one. This signal consists of four main components that are (i) a first wave packet representing the S_0 mode of propagation

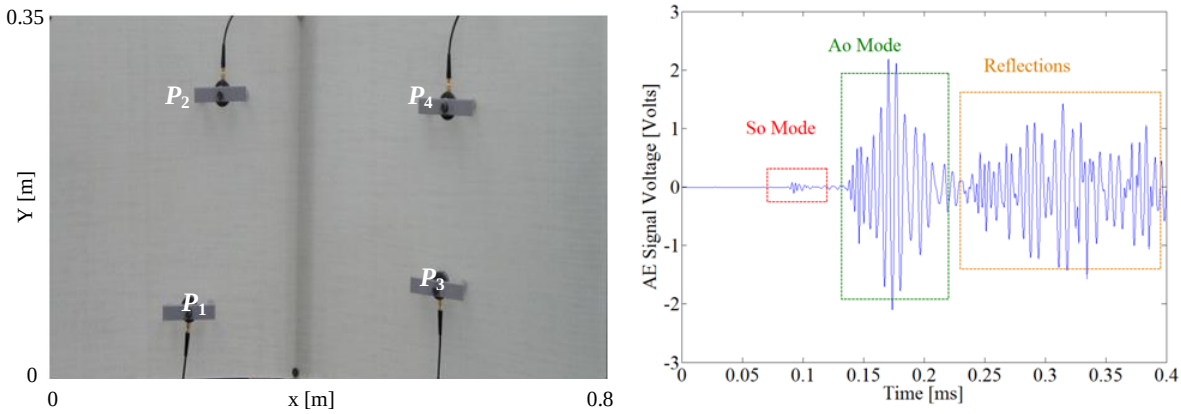

(a) (b)

Fig. 4. GFRP plate: (a) experimental setup; (b) signal generated from a pencil lead brake.

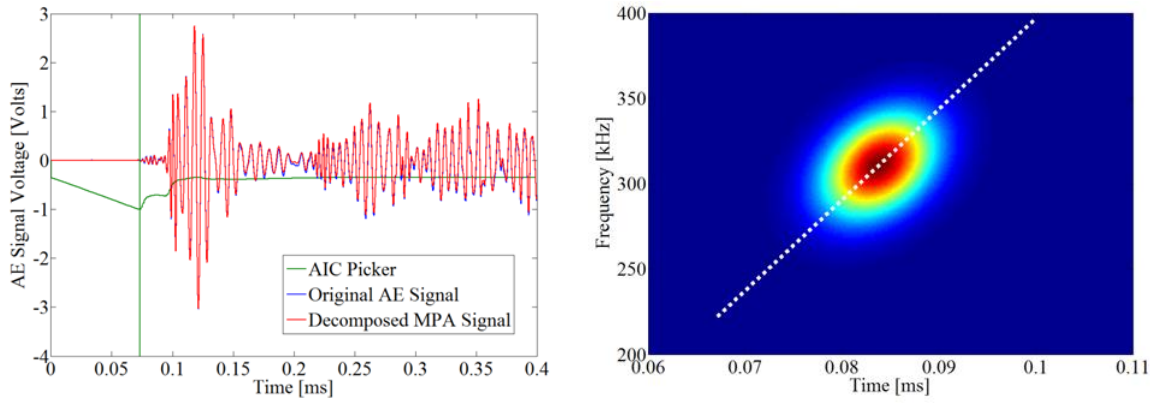

(a) (b)

Fig. 5. Pencil lead break mode identification in GFRP plate for P_1: (a) matching pursuit algorithm and onset time detector estimate; (b) matched atom energy distribution corresponding to the onset estimation.

with faster energy velocity, (ii) a second wave packet presenting the slower A_0 mode of propagation, (iii) reflections from the boundaries of the structure and (iv) inherent noise. From this figure, it can be clearly seen the capabilities of the method to properly separate between modes by depressing the effect of overlapping; the difficulty to separate wave packets both in time and frequency and the elimination of non-negligible cross-terms using traditional methods was overcome by the proposed approach. The TFR algorithm used in this work was the Wigner-Ville distribution and the matched atoms were considered as analytic signals. The intensity of the plot is proportional to the energy content in the signal at the indicated frequency and time.

From the conclusions obtained in the fourth section, it can be estimated from the energy distribution and frequency modulation rate sign that the detected mode corresponds to the S_0 mode. Finally, we illustrate the atomic decomposition on a signal produced by a pencil lead break at 90 °with respect to the plane of the CFRP plate. It is well known that for this kind of elastic wave exitation most of the motion is normal to the plate and it normally generates a large flexural mode. For this experiment, the distance between a selected sensor in the network, P_1 with no loss of generality, and the source was specially selected in order that the chosen sensor was able to detect a different mode in comparison to the others in the network, i.e., just the A_0 mode, while the S_0 mode amplitude is totally decreased and lost in the background noise. Figure 6 depicts the complete chirplet decomposition of the

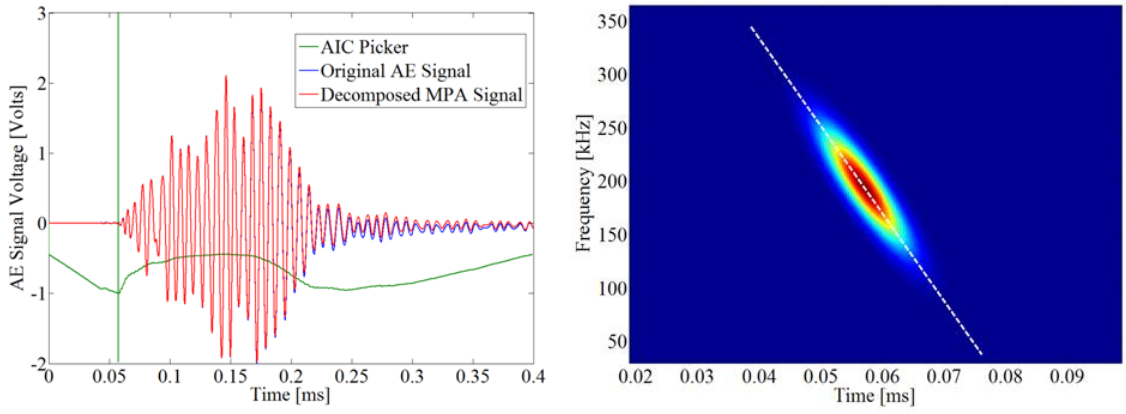

(a) (b)

Fig. 6. Pencil lead break normal to the GFRP plate plane: (a) matching pursuit algorithm and onset time detector estimate; (b) matched atom energy distribution corresponding to the onset estimation.

recorded signal at P_1 and the quadratic energy distribution related to the matched atom predicted by the onset detector.

This signal consists of two main components that are (i) a first wave packet representing the A_0 mode of propagation with (ii) a second train of wave packets related to the reflections from the boundaries of the structure and noise. According to the same previous assumptions from the energy characteristics of the matched atom, it can be concluded that the detected mode was A_0. By interrogating every sensor in the network, it can be found that not all the sensors detected the same mode in this case, and a correction measure must be taken in order to guarantee the selection of a common mode to all the sensors, so that potential errors in the localization algorithm can be avoided. This can be easily done since all the decomposed signals contain well defined atoms in time and frequency, and mode wave packet arrival detection can be automatically implemented based on the energy characteristics of the atoms. Finally, the analyzed characteristics of the recorded signals could be used for the application of advanced source localization algorithms. The successful application of the present method in the current passive monitoring technique is partially due to the good choice of the matching pursuit dictionary and the optimization method used to find the optimal parameters representing the signal content. Moreover, the proposed method allows a different approach from traditional statistical analysis and enables an improved understanding of the origin of the source.

6. Conclusions

This study proposes a robust approach in order to overcome particular problems faced in source identification and localization in acoustic emission testing. A chirplet atomic decomposition was developed to accurately classify wave packets pertaining to different modes of propagation based on dispersive energy characteristics. The proposed decomposition automatically finds the atoms describing the content of the AE signals and provides an optimized representation of the acoustic emission waveforms. This strategy significantly improves the resolution of the decomposition without increasing the size of the dictionary and speeding up the computation time. In addition, a time-frequency energy distribution has allowed the complete investigation of the frequency content evolution from complex ultrasonic signals of interest to structural health monitoring. Moreover, the dispersion of the propagation modes could be characterized by taking advantage of the matching pursuit decomposition, and the proposed analytical model has been validated with experimental data in order to show its effectiveness. Further research will extend this approach to more complicated structures, consideration of viscoelasticity in the model and to the investigation of additional physical attributes for a better detection and quantification of the acoustic emission wave packet features.

Acknowledgments

The authors would like to express their gratitude to the Research School on Multi-Modal Sensor Systems for Environmental Exploration (MOSES) and the Center for Sensor Systems (ZESS) for sponsoring the research presented herein. Furthermore, the authors thank Dr. Rolf Schulte and Jochen Moll from the University of Siegen, Department of Technical Mechanics, for providing the composite plate and for fruitful discussions concerning the implementation proposed methodology.

References

[1] W. Staszewski, C. Boller and G.R. Tomlinson, *Health Monitoring of Aerospace Structures: Smart Sensor Technologies and Signal Processing*, Munich: Wiley, 2004.

[2] S.M. Ziola and M.R. Gorman, Source location in thin plates using cross-correlation,. *The Journal of the Acoustical Society of America* **90**(5) (1991), 2551−2556.

[3] L. Gaul, S. Hurlebaus and L.J. Jacobs, Localization of a "synthetic" acoustic emission source on the surface of a fatigue specimen, *Research in Nondestructive Evaluation* **13**(2) (2001), 105−117.

[4] K.M. Holford, Acoustic Emission-Basic Principles and Future Directions, *Strain* **36**(2) (2000), 51−54.

[5] M.G. Baxter, R. Pullin, K.M. Holford and S.L. Evans, Delta T source location for acoustic emission, *Mechanical Systems and Signal Processing* **21**(3 (2007), 1512−1520.

[6] J. Hensman, R. Mills, S.G. Pierce, K.Worden and M. Eaton, Locating acoustic emission sources in complex structures using Gaussian processes, *Mechanical Systems and Signal Processing* **24**(1) (2008), 211−223.

[7] M. McGugan, B.F. Sørensen, R. Østergaard and T. Bech, *Detecting and identifying damage in sandwich polymer composite by using acoustic emission*, in Risø-R Report, Risø National Laboratory: Roskilde, Denmark, 2006.

[8] M.A. Torres-Arredondo and C.P. Fritzen, *On the application of digital signal processing techniques and statistical analysis for the localization of acoustic emissions*, In Proceedings of the 5th European Workshop in Structural Health Monitoring, EWSHM 2011, Sorrento, Italy: DEStech Publications, Inc., 2010, pp. 1017−1022.

[9] N. Godin, S. Huguet, R. Gaertner and L. Salmon, Clustering of acoustic emission signals collected during tensile tests on unidirectional glass/polyester composite using supervised and unsupervised classifiers, *NDT&E International* **37** (2004), 253–264.

[10] T. Kundu, *Ultrasonic Nondestructive Evaluation: Engineering and Biological Material Characterization*, (1st ed.), London: CRC Press, 2003.

[11] M. Castaings and B. Hosten, Lamb and SH waves generated and detected by air-coupled ultrasonic transducers in composite material plates, *NDT & E International* **34**(4) (2001), 249−258.

[12] R.D. Mindlin, Influence of rotary inertia and shear on flexural motion of isotropic elastic plates, *Journal of Applied Mechanics Transactions of the ASME* **18** (1951), 31−38.

[13] J.M. Whitney and C.T. Sun, A higher order theory for extensional motion of laminated composites, *Journal of Sound and Vibration* **30**(1) (1973), 85−97.

[14] J. Moll, M.A. Torres-Arredondo and C.P. Fritzen, *Numerical Aspects of Automatic Guided Wave Based Damage Localization Algorithms in Flat Anisotropic Structures*, Submitted to "Smart Structures and Systems", 2011.

[15] F. Scherbaum, *Of Poles and Zeros: Fundamentals of Digital Seismology*, (2nd ed.), Modern Approaches in Geophysics: Springer, 2001.

[16] S.G. Mallat, A theory for multiresolution signal decomposition: the wavelet representation, *IEEE Transactions on Pattern Analysis and Machine Intelligence* **11**(7) (1989), 674−693.

[17] R.R. Coifman and M.V. Wickerhauser, Entropy-based algorithms for best basis selection, *IEEE Transactions on Information Theory* **38**(2) (1992), 713−718.

[18] J.H. Kurz, C.U. Grosse and H.-W. Reinhardt, Strategies for reliable automatic onset time picking of acoustic emissions and of ultrasound signals in concrete, *Ultrasonics* **43**(7) (2005), 538−546.

[19] S.G. Mallat and Z. Zhang, Matching pursuits with time-frequency dictionaries, *IEEE Transactions on Signal Processing* **41**(12) (1993), 3397−3415.

[20] A. Raghavan and C.E.S. Cesnik, Guided-wave signal processing using chirplet matching pursuits and mode correlation for structural health monitoring, *Smart Materials and Structures* **16**(2) (2007), 355−366.