Hindawi
Shock and Vibration
Volume 2017, Article ID 9864959, 18 pages
https://doi.org/10.1155/2017/9864959

Research Article

Three-Dimensional Modeling and Structured Vibration Modes of Two-Stage Helical Planetary Gears Used in Cranes

Lina Zhang,[1,2] Yong Wang,[1,2] Kai Wu,[3] and Ruoyu Sheng[1]

[1] *School of Mechanical Engineering, Shandong University, Jinan, China*
[2] *Key Laboratory of High-Efficiency and Clean Mechanical Manufacture, Shandong University, Ministry of Education, Jinan, China*
[3] *Weichai Power Co., Ltd., Weifang, China*

Correspondence should be addressed to Yong Wang; mewy863@163.com

Received 9 September 2016; Revised 26 November 2016; Accepted 22 December 2016; Published 27 February 2017

Academic Editor: Francesco Ripamonti

The dynamic investigation of helical planetary gears plays an important role in structure design as the vibration and noise are perceived negatively to the transmission quality. With consideration of the axial deformations of members, the gyroscopic effects, the time-variant meshing stiffness, and the coupling amongst stages, a three-dimensional dynamic model of the two-stage helical planetary gears is established by using of the lumped-parameter method in this paper. The model is applicable to variant number of planets in two stages, different planet phasing, and spacing configurations. Numerical simulation is conducted to detect the structured vibration modes of the equally spaced systems. Furthermore, the unique properties of these vibration modes are mathematically proved. Results show that the vibration modes of the two-stage helical planetary gears can be categorized as five classes: the rigid body mode, the axial translational-rotational mode, the radical translational mode, and the 1st-stage and the 2nd-stage planet mode.

1. Introduction

Planetary gears are widely used in aerospace and wind turbine industries because of their high reliability and compactness. As the higher load carrying capacity and higher reduction ratio compared with spur planetary gear sets, the helical planetary gear sets are the norm for all automotive applications [1]. The high-frequency dynamic meshing forces generated by the operated planetary gears are typically larger than the quasi-static forces. Besides, vibration and noise induced by the dynamic forces are potentially hazard for the reliability and durability of the gears and bearings. Hence, the dynamic modeling and analysis of planetary system have great significance for designers.

Many researches are conducted on the dynamics of planetary gear to reduce the vibration and noise of the system. Kahraman [2] extended a three-dimensional dynamic model of a single-stage planetary gear train to obtain the natural modes. Lin and Parker [3–5] established a translational-rotational dynamic model of a single-stage spur planetary gear and investigated the free vibration characteristics of systems with equally spaced and diametrically opposed planets, respectively. Eritenel and Parker [6] formulated the three-dimensional model of the single-stage helical planetary gears and mathematically categorized the structured modal properties. Sheng et al. [7] investigated the vibration modal properties of the double-helical planetary gear system with three-dimensional motion using numerical and analytical approach. Qian et al. [8] identified the vibration structures of a particular planetary gear used in a coal shearer and validated the model by comparing with the finite element model. Abousleiman and Velex [9] proposed an original hybrid FE/lumped-parameter model of planetary gear sets to simulate the three-dimensional dynamic behavior of planetary gears with tooth modifications and errors. Zhang et al. [10] investigated the vibration characteristics of the closed-form spur planetary gears. Most above dynamic models belong to lumped-parameter models [1–7, 10–19] and finite element models [8, 9, 17, 20–28]. The long computation times of the finite element model make lumped-parameter model more favorable. The precise modeling of the planetary gears gains more insights in the dynamics of the system. With these models, Al-Shyyab and Kahraman [29–31] solved the equations of motion semianalytically using multiterm harmonic

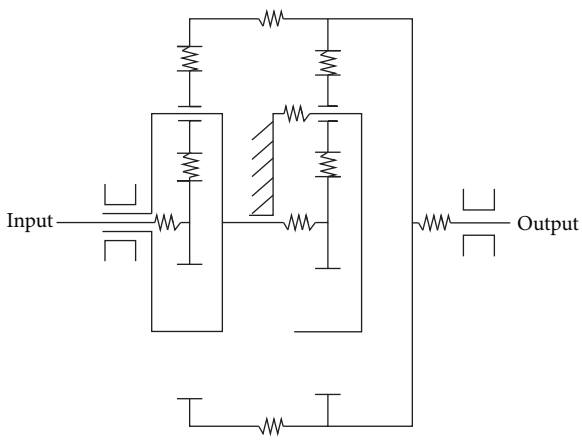

Figure 1: The discrete model of example HPG.

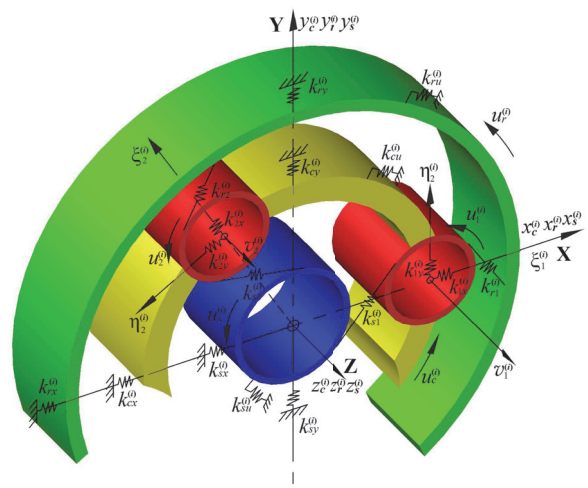

Figure 2: The three-dimensional lumped-parameter model of the single-stage HPG.

balance method (HBM) in conjunction with inverse discrete Fourier transform and Newton–Rapson method. Chen et al. [32] investigated the dynamic response of the planetary gears with consideration of the flexibility of the internal ring gears. Chapron et al. [33] analyzed optimum profile modifications in helical and double-helical planetary gears (PGTs) with regard to dynamic mesh forces. Ericson and Parker [34] proved the accuracy of lumped-parameter and finite element models by experimentation and highlighted several design and modeling characteristics of planetary gears.

Compared with the spur planetary gears, the helical planetary gears (HPGs) are more competent and smooth-operated. Nevertheless, for a HPG system, the axial dynamic forces generated by gear meshing exist ubiquitously. Thus, the axial deformations of gears should be considered in the dynamic behavior investigations. Also, numerous analytical models on single-stage helical gear dynamics can be found in the literature while research on multistage helical gears is quiet limited. The coupling stiffness amongst the adjacent stages should be considered.

In the present paper, the main contributions of this paper contain two aspects. Firstly, the equations of motion of two-stage HPG used in cranes with consideration of axial deformations are derived. And secondly, the vibration characteristics of two-stage systems are investigated. The lumped-parameter model with three-dimensional motions is proposed to investigate the free vibration characteristics of HPGs. Modal properties are observed and categorized through the numerical simulation. Characteristics of each type of vibration modes are summarized. The unique properties of these vibration modes are then mathematically proved.

2. Three-Dimensional Dynamic Model of Planetary Gear

A two-stage HPG shown in Figure 1 is considered in this study. It is composed of a 2K-H differential planetary gear train and a quasi-planetary gear set. The input power is split into two paths when it is transmitted to the differential gear set. One is the ring of the differential gear set and the other is the sun gear of the quasi-planetary gear set. Finally, the power is output by rings of two stages. The closed-form structure effectively extends the range of transmission ratio and efficiency.

The three-dimensional discrete model of the example system is proposed. Component bearings, gear meshes, and interactions between two stages are all modeled by linear springs. Three-dimensional translation and the axial rotation are considered for any member as shown in Figure 2. The damping is not shown in the model. By choosing reasonable stiffness, any stage of the system in Figure 1 can be represented by Figure 2. The stiffness which equals a bearing or spline support stiffness is dependent on the specific kinematic configuration of the stage i ($i = 1, 2$) [35].

To obtain the relative displacements of members accurately, two kinds of three-dimensional coordinate systems shown in Figure 3 are created. One is the three-dimensional absolute coordinate system $OXYZ$, and the other is the dynamic coordinate system $\mathbf{o}\xi\eta\upsilon$ that rotate about the absolute coordinate. O and $\mathbf{o}$ are the theoretical installation center of sun gear and carrier, respectively. These two points superpose each other when the installation error is ignored. The unit vectors of the absolute coordinate system and the dynamic coordinate system are signed as $\{\mathbf{i}', \mathbf{j}', \mathbf{k}'\}$ and $\{\mathbf{i}, \mathbf{j}, \mathbf{k}\}$, respectively. According to the coordinate transformation theory, three-dimensional translation relationships of members can be drawn from Figure 3.

$$\begin{bmatrix} X \\ Y \\ Z \end{bmatrix} = \begin{bmatrix} \cos\Omega_c t & -\sin\Omega_c t & 0 \\ \sin\Omega_c t & \cos\Omega_c t & 0 \\ 0 & 0 & 1 \end{bmatrix} \begin{bmatrix} \xi \\ \eta \\ \upsilon \end{bmatrix}, \tag{1}$$

where $[X \;\; Y \;\; Z]^T$ is the three-dimensional component of the displacement vector in the absolute coordinate system and $[\xi \;\; \eta \;\; \upsilon]^T$ is the component of the displacement vector in the dynamic coordinate system. Ω_c is the angular speed.

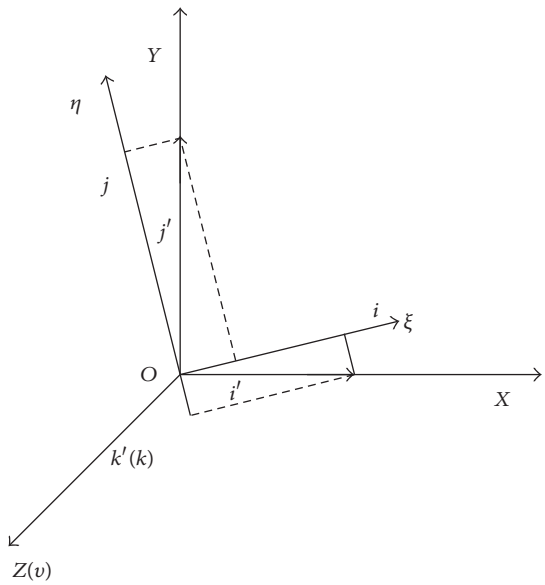

Figure 3: Schematic representation of coordinate systems.

The corresponding acceleration of members in those two coordinate systems is

$$\begin{bmatrix} \ddot{\xi} \\ \ddot{\eta} \\ \ddot{\upsilon} \end{bmatrix} = \begin{bmatrix} \cos\Omega_c t & \sin\Omega_c t & 0 \\ -\sin\Omega_c t & \cos\Omega_c t & 0 \\ 0 & 0 & 1 \end{bmatrix} \begin{bmatrix} \ddot{X} \\ \ddot{Y} \\ \ddot{Z} \end{bmatrix}. \quad (2)$$

The component of absolute acceleration of planet in the dynamic coordinate system is

$$\begin{aligned} a_x &= \ddot{\xi} - 2\Omega_c\dot{\eta} - \Omega_c^2\xi, \\ a_y &= \ddot{\eta} - 2\Omega_c\dot{\xi} - \Omega_c^2\eta, \\ a_z &= \ddot{\upsilon}. \end{aligned} \quad (3)$$

2.1. Formulation of the Equivalent Displacements. The structural member is denoted by the subscript of physical symbols and the superscript i denotes the structural member that is in stage i. The following analyses coincide with the rules that the torsional displacement is positive when it is counterclockwise and the relative displacements for gear meshes are defined positive when compressed.

The relative displacement of the sun-planet mesh normal to tooth surface is

$$\begin{aligned} \delta_{sn}^{(i)} = {} & \left[\left(u_s^{(i)} - x_s^{(i)}\sin\psi_{sn}^{(i)} + y_s^{(i)}\cos\psi_{sn}^{(i)}\right)\right. \\ & \left. - \left(-u_n^{(i)} + \xi_n^{(i)}\sin\alpha^{(i)} + \eta_n^{(i)}\cos\alpha^{(i)}\right)\right]\cos\beta^{(i)} + \left(z_s^{(i)}\right. \\ & \left. - \upsilon_n^{(i)}\right)\sin\beta^{(i)}. \end{aligned} \quad (4)$$

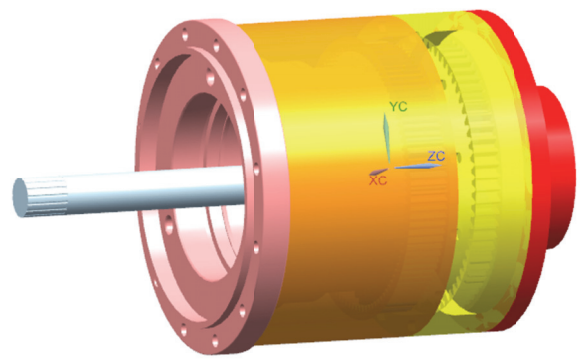

Figure 4: The 3D model of the two-stage HPG.

Similarly, the relative displacement of the ring-planet mesh normal to tooth surface is

$$\begin{aligned} \delta_{rn}^{(i)} = {} & \left[\left(u_r^{(i)} - x_r^{(i)}\sin\psi_{rn}^{(i)} + y_r^{(i)}\cos\psi_{rn}^{(i)}\right)\right. \\ & \left. - \left(u_n^{(i)} - \xi_n^{(i)}\sin\alpha^{(i)} + \eta_n^{(i)}\cos\alpha^{(i)}\right)\right]\cos\beta^{(i)} + \left(\upsilon_n^{(i)}\right. \\ & \left. - z_r^{(i)}\right)\sin\beta^{(i)}. \end{aligned} \quad (5)$$

The relative compression between planet and carrier along the line of $x_c^{(i)}$, $y_c^{(i)}$, $z_c^{(i)}$, and $u_c^{(i)}$ is defined as

$$\begin{aligned} \delta_{cnx}^{(i)} &= x_c^{(i)} - u_c^{(i)}\sin\psi_n^{(i)} - \xi_n^{(i)}\cos\psi_n^{(i)} + \eta_n^{(i)}\sin\psi_n^{(i)}, \\ \delta_{cny}^{(i)} &= y_c^{(i)} + u_c^{(i)}\cos\psi_n^{(i)} - \xi_n^{(i)}\sin\psi_n^{(i)} - \eta_n^{(i)}\cos\psi_n^{(i)}, \\ \delta_{cnz}^{(i)} &= z_c^{(i)} - \upsilon_n^{(i)}, \\ \delta_{cnu}^{(i)} &= u_c^{(i)} - \eta_n^{(i)} - x_c^{(i)}\sin\psi_n^{(i)} + y_c^{(i)}\cos\psi_n^{(i)}. \end{aligned} \quad (6)$$

Besides, the relative compression between planet and carrier along the line of $\xi_n^{(i)}$ and $\eta_n^{(i)}$ is given as

$$\begin{aligned} \delta_{pnx}^{(i)} &= \xi_n^{(i)} - x_c^{(i)}\cos\psi_n^{(i)} - y_c^{(i)}\sin\psi_n^{(i)}, \\ \delta_{pny}^{(i)} &= \eta_n^{(i)} - u_c^{(i)} + x_c^{(i)}\sin\psi_n^{(i)} - y_c^{(i)}\cos\psi_n^{(i)}. \end{aligned} \quad (7)$$

The ring gear of the 1st-stage PGT and the ring gear of 2nd-stage PGT are both a part of the shell, and they are coupled by the shell. The meshing position of each stage is different. Because the rotation speeds of planets of each stage differ, there should be a relative torsional displacement between the contact positions of rings in two stages. Similarly, the carrier of the 1st-stage PGT and the sun gear of the 2nd PGT are linked by the spline. The 3D model of the two-stage planetary gear set is shown in Figure 4. Relative displacements of the adjacent members should be analyzed.

Thus, the equivalent displacements of members in adjacent stages are written as

$$\begin{aligned} X_r^{(1,2)} &= x_r^{(1)} - x_r^{(2)}, \\ Y_r^{(1,2)} &= y_r^{(1)} - y_r^{(2)} \\ Z_r^{(1,2)} &= z_r^{(1)} - z_r^{(2)}, \\ \delta_r^{(1,2)} &= u_r^{(1)} - u_r^{(2)} \\ X_{cs}^{(1,2)} &= x_c^{(1)} - x_s^{(2)}, \\ Y_{cs}^{(1,2)} &= y_c^{(1)} - y_s^{(2)} \\ Z_{cs}^{(1,2)} &= z_c^{(1)} - z_s^{(2)}, \\ \delta_{cs}^{(1,2)} &= u_c^{(1)} - u_s^{(2)}. \end{aligned} \tag{8}$$

2.2. Formulation of Meshing Forces. The normal meshing forces of sun-planet and ring-planet in stage i are

$$F_{sn}^{(i)} = k_{sn}^{(i)} f\left(\delta_{sn}^{(i)}, b^{(i)}\right) + c_{sn}^{(i)} \dot{\delta}_{sn}^{(i)}, \tag{9a}$$

$$F_{rn}^{(i)} = k_{rn}^{(i)} f\left(\delta_{rn}^{(i)}, b^{(i)}\right) + c_{rn}^{(i)} \dot{\delta}_{rn}^{(i)}, \tag{9b}$$

where $f(\delta_{sn}^{(i)}, b^{(i)})$ and $f(\delta_{rn}^{(i)}, b^{(i)})$ are the piecewise linear backlash function of sun-planet and ring-planet, respectively, and they are defined as

$$f\left(\delta_{jn}^{(i)}, b^{(i)}\right) = \begin{cases} \delta_{jn}^{(i)} - b^{(i)}, & \delta_{jn}^{(i)} > b^{(i)}, \\ 0, & -b^{(i)} \le \delta_{jn}^{(i)} \le b^{(i)}, \\ \delta_{jn}^{(i)} + b^{(i)}, & \delta_{jn}^{(i)} < -b^{(i)}, \end{cases} \quad (j = c, s). \tag{10}$$

2.3. Dynamic Equations of Motion. The displacement vector is written as

$$\mathbf{q} = \left\{ \overbrace{\underbrace{\mathbf{q}_c^{(1)}}_{c}, \underbrace{\mathbf{q}_r^{(1)}}_{r}, \underbrace{\mathbf{q}_s^{(1)}}_{s}, \underbrace{\mathbf{q}_1^{(1)}}_{\text{planet 1}}, \ldots, \underbrace{\mathbf{q}_{N_1}^{(1)}}_{\text{planet } N_1}}^{\text{stage 1}}, \overbrace{\underbrace{\mathbf{q}_c^{(2)}}_{c}, \underbrace{\mathbf{q}_r^{(2)}}_{r}, \underbrace{\mathbf{q}_s^{(2)}}_{s}, \underbrace{\mathbf{q}_1^{(2)}}_{\text{planet 1}}, \ldots, \underbrace{\mathbf{q}_{N_2}^{(2)}}_{\text{planet } N_2}}^{\text{stage 2}} \right\}^{\mathbf{T}}, \tag{11}$$

where $\mathbf{q}_j^{(i)} = [x_j^{(i)}, y_j^{(i)}, z_j^{(i)}, u_j^{(i)}]$, $j = c, r, s$; $\mathbf{q}_n^{(i)} = [\xi_n^{(i)}, \eta_n^{(i)}, \upsilon_n^{(i)}, u_n^{(i)}]$.

The equations of motion of the two-stage helical planetary gear set under consideration of the rotational, translational, and axial displacements (a total of $24 + 4(N_1 + N_2)$ degrees of freedom) are derived by Newton's second law and the Theorem of Moment of Momentum. The dynamic equations of motion of the example system are listed as follows.

(1) Equations of the carrier in the 1st stage are

$$\begin{aligned} & m_c^{(1)}\left(\ddot{x}_c^{(1)} - 2\Omega_c^{(1)}\dot{y}_c^{(1)} - \Omega_c^{(1)2}x_c^{(1)}\right) + \sum c_p^{(1)}\dot{\delta}_{cnx}^{(1)} \\ & \quad + \sum k_p^{(1)}\delta_{cnx}^{(1)} + c_{cx}^{(1)}\dot{x}_c^{(1)} + k_{cx}^{(1)}x_c^{(1)} + c_{csx}^{(1,2)}\dot{X}_{cs}^{(1,2)} \\ & \quad + k_{csx}^{(1,2)}X_{cs}^{(1,2)} = 0, \end{aligned} \tag{12a}$$

$$\begin{aligned} & m_c^{(1)}\left(\ddot{y}_c^{(1)} + 2\Omega_c^{(1)}\dot{x}_c^{(1)} - \Omega_c^{(1)2}y_c^{(1)}\right) + \sum c_p^{(1)}\dot{\delta}_{cny}^{(1)} \\ & \quad + \sum k_p^{(1)}\delta_{cny}^{(1)} + c_{cy}^{(1)}\dot{y}_c^{(1)} + k_{cy}^{(1)}y_c^{(1)} + c_{csy}^{(1,2)}\dot{Y}_{cs}^{(1,2)} \\ & \quad + k_{csy}^{(1,2)}Y_{cs}^{(1,2)} = 0, \end{aligned} \tag{12b}$$

$$\begin{aligned} & m_c^{(1)}\ddot{z}_c^{(1)} + \sum c_p^{(1)}\dot{\delta}_{cnz}^{(1)} + \sum k_{pz}^{(1)}\delta_{cnz}^{(1)} + c_{cz}^{(1)}\dot{z}_c^{(1)} \\ & \quad + k_{cz}^{(1)}z_c^{(1)} + c_{csz}^{(1,2)}\dot{Z}_{cs}^{(1,2)} + k_{csz}^{(1,2)}Z_{cs}^{(1,2)} = 0, \end{aligned} \tag{12c}$$

$$\begin{aligned} & \left(\frac{I_c^{(1)}}{r_c^{(1)2}}\right)\ddot{u}_c^{(1)} + \sum c_p^{(1)}\dot{\delta}_{cnu}^{(1)} + \sum k_p^{(1)}\delta_{cnu}^{(1)} + c_{cu}^{(1)}\dot{u}_c^{(1)} \\ & \quad + k_{cu}^{(1)}u_c^{(1)} + c_{csu}^{(1,2)}\dot{\delta}_{cs}^{(1,2)} + k_{csu}^{(1,2)}\delta_{cs}^{(1,2)} = \frac{T_c^{(1)}}{r_c^{(1)}}. \end{aligned} \tag{12d}$$

(2) Equations of the ring gear in the 1st stage are

$$\begin{aligned} & m_r^{(1)}\left(\ddot{x}_r^{(1)} - 2\Omega_c^{(1)}\dot{y}_r^{(1)} - \Omega_c^{(1)2}x_r^{(1)}\right) \\ & \quad - \sum F_{rn}^{(1)}\cos\beta^{(1)}\sin\psi_{rn}^{(1)} + c_{rx}^{(1)}\dot{x}_r^{(1)} + k_{rx}^{(1)}x_r^{(1)} \\ & \quad + c_{rx}^{(1,2)}\dot{X}_r^{(1,2)} + k_{rx}^{(1,2)}X_r^{(1,2)} = 0, \end{aligned} \tag{13a}$$

$$\begin{aligned} & m_r^{(1)}\left(\ddot{y}_r^{(1)} + 2\Omega_c^{(1)}\dot{x}_r^{(1)} - \Omega_c^{(1)2}y_r^{(1)}\right) \\ & \quad + \sum F_{rn}^{(1)}\cos\beta^{(1)}\cos\psi_{rn}^{(1)} + c_{ry}^{(1)}\dot{y}_r^{(1)} + k_{ry}^{(1)}y_r^{(1)} \\ & \quad + c_{ry}^{(1,2)}\dot{Y}_r^{(1,2)} + k_{ry}^{(1,2)}Y_r^{(1,2)} = 0, \end{aligned} \tag{13b}$$

$$\begin{aligned} & m_r^{(1)}\ddot{z}_r^{(1)} + \sum F_{rn}^{(1)}\sin\beta^{(1)} + c_{rz}^{(1)}\dot{z}_r^{(1)} + k_{rz}^{(1)}z_r^{(1)} \\ & \quad + c_{rz}^{(1,2)}\dot{Z}_r^{(1,2)} + k_{rz}^{(1,2)}Z_r^{(1,2)} = 0, \end{aligned} \tag{13c}$$

$$\begin{aligned} & \left(\frac{I_r^{(1)}}{r_r^{(1)2}}\right)\ddot{u}_r^{(1)} + \sum F_{rn}^{(1)}\cos\beta^{(1)} + c_{ru}^{(1)}\dot{u}_r^{(1)} + k_{ru}^{(1)}u_r^{(1)} \\ & \quad + c_{ru}^{(1,2)}\dot{\delta}_r^{(1,2)} + k_{ru}^{(1,2)}\delta_r^{(1,2)} = \frac{T_r^{(1)}}{r_r^{(1)}}. \end{aligned} \tag{13d}$$

(3) Equations of the sun gear in the 1st stage are

$$\begin{aligned} & m_s^{(1)}\left(\ddot{x}_s^{(1)} - 2\Omega_c^{(1)}\dot{y}_s^{(1)} - \Omega_c^{(1)2}x_s^{(1)}\right) \\ & \quad - \sum F_{sn}^{(1)}\sin\psi_{sn}^{(1)}\cos\beta^{(1)} + c_{sx}^{(1)}\dot{x}_s^{(1)} + k_{sx}^{(1)}x_s^{(1)} = 0, \end{aligned} \tag{14a}$$

$$m_s^{(1)}\left(\ddot{y}_s^{(1)}+2\Omega_c^{(1)}\dot{x}_s^{(1)}-\Omega_c^{(1)2}y_s^{(1)}\right)+\sum F_{sn}^{(1)}\cos\psi_{sn}^{(1)}\cos\beta^{(1)}+c_{sy}^{(1)}\dot{y}_s^{(1)}+k_{sy}^{(1)}y_s^{(1)}=0, \tag{14b}$$

$$m_s^{(1)}\ddot{z}_s^{(1)}+\sum F_{sn}^{(1)}\sin\beta^{(1)}+c_{sz}^{(1)}\dot{z}_s^{(1)}+k_{sz}^{(1)}z_s^{(1)}=0, \tag{14c}$$

$$\left(\frac{I_s^{(1)}}{r_s^{(1)2}}\right)\ddot{u}_s^{(1)}+\sum F_{sn}^{(1)}\cos\beta^{(1)}+c_{su}^{(1)}\dot{u}_s^{(1)}+k_{su}^{(1)}u_s^{(1)}=\frac{T_s^{(1)}}{r_s^{(1)}}. \tag{14d}$$

(4) Equations of planets in the 1st stage are

$$m_p^{(1)}\left(\ddot{\xi}_n^{(1)}-2\Omega_c^{(1)}\dot{\eta}_n^{(1)}-\Omega_c^{(1)2}\xi_n^{(1)}\right)-F_{sn}^{(1)}\cos\beta^{(1)}\sin\alpha_{sp}^{(1)}+F_{rn}^{(1)}\cos\beta^{(1)}\sin\alpha_{rp}^{(1)}+c_{px}^{(1)}\dot{\delta}_{pnx}^{(1)}+k_{px}^{(1)}\delta_{pnx}^{(1)}=0, \tag{15a}$$

$$m_p^{(1)}\left(\ddot{\eta}_n^{(1)}+2\Omega_c^{(1)}\dot{\xi}_n^{(1)}-\Omega_c^{(1)2}\eta_n^{(1)}\right)-F_{sn}^{(1)}\cos\beta^{(1)}\cos\alpha_{sp}^{(1)}-F_{rn}^{(1)}\cos\beta^{(1)}\cos\alpha_{rp}^{(1)}+c_{py}^{(1)}\dot{\delta}_{pny}^{(1)}+k_{py}^{(1)}\delta_{pny}^{(1)}=0, \tag{15b}$$

$$m_p^{(1)}\ddot{v}_n^{(1)}-F_{sn}^{(1)}\sin\beta^{(1)}-F_{rn}^{(1)}\sin\beta^{(1)}-c_{pz}^{(1)}\dot{\delta}_{cnz}^{(1)}-k_{pz}^{(1)}\delta_{cnz}^{(1)}=0, \tag{15c}$$

$$\left(\frac{I_p^{(1)}}{r_p^{(1)2}}\right)\ddot{u}_p^{(1)}+F_{sn}^{(1)}\cos\beta^{(1)}-F_{rn}^{(1)}\cos\beta^{(1)}=0, \tag{15d}$$

$$n=1,\ldots,N_1.$$

(5) Equations of the carrier in the 2nd stage are

$$m_c^{(2)}\left(\ddot{x}_c^{(2)}-2\Omega_c^{(2)}\dot{y}_c^{(2)}-\Omega_c^{(2)2}x_c^{(2)}\right)+\sum c_p^{(2)}\dot{\delta}_{cnx}^{(i)}+\sum k_p^{(2)}\delta_{cnx}^{(2)}+c_{cx}^{(2)}\dot{x}_c^2+k_{cx}^{(2)}x_c^{(2)}=0, \tag{16a}$$

$$m_c^{(2)}\left(\ddot{y}_c^{(2)}-2\Omega_c^{(2)}\dot{x}_c^{(2)}-\Omega_c^{(2)2}y_c^{(2)}\right)+\sum c_p^{(2)}\dot{\delta}_{cny}^{(2)}+\sum k_p^{(2)}\delta_{cny}^{(2)}+c_{cy}^{(2)}\dot{y}_c^{(2)}+k_{cy}^{(2)}y_c^{(2)}=0, \tag{16b}$$

$$m_c^{(2)}\ddot{z}_c^{(2)}+\sum c_p^{(2)}\dot{\delta}_{cnz}^{(2)}+\sum k_{pz}^{(2)}\delta_{cnz}^{(2)}+c_{cz}^{(2)}\dot{z}_c^{(2)}+k_{cz}^{(2)}z_c^{(2)}=0, \tag{16c}$$

$$\left(\frac{I_c^{(2)}}{r_c^{(2)2}}\right)\ddot{u}_c^{(i)}+\sum c_p^{(2)}\dot{\delta}_{cnu}^{(2)}+\sum k_p^{(2)}\delta_{cnu}^{(2)}+c_{cu}^{(2)}\dot{u}_c^{(2)}+k_{cu}^{(2)}u_c^{(2)}=\frac{T_c^{(2)}}{r_c^{(2)}}. \tag{16d}$$

(6) Equations of the ring gear in the 2nd stage are

$$m_r^{(2)}\left(\ddot{x}_r^{(2)}-2\Omega_c^{(2)}\dot{y}_r^{(2)}-\Omega_c^{(2)2}x_r^{(2)}\right)-\sum F_{rn}^{(2)}\cos\beta^{(2)}\cdot\sin\psi_{rn}^{(2)}+c_{rx}^{(2)}\dot{x}_r^{(2)}+k_{rx}^{(2)}x_r^{(1)}-c_{rx}^{(1,2)}\dot{X}_r^{(1,2)}-k_{rx}^{(1,2)}X_r^{(1,2)}=0, \tag{17a}$$

$$m_r^{(2)}\left(\ddot{y}_r^{(2)}+2\Omega_c^{(2)}\dot{x}_r^{(2)}-\Omega_c^{(2)2}y_r^{(1)}\right)+\sum F_{rn}^{(1)}\cos\beta^{(1)}\cdot\cos\psi_{rn}^{(1)}+c_{ry}^{(1)}\dot{y}_r^{(1)}+k_{ry}^{(1)}y_r^{(1)}-c_{ry}^{(1,2)}\dot{Y}_r^{(1,2)}-k_{ry}^{(1,2)}Y_r^{(1,2)}=0, \tag{17b}$$

$$m_r^{(2)}\ddot{z}_r^{(2)}+\sum F_{rn}^{(2)}\sin\beta^{(2)}+c_{rz}^{(2)}\dot{z}_r^{(2)}+k_{rz}^{(2)}z_r^{(2)}-c_{rz}^{(1,2)}\dot{Z}_r^{(1,2)}-k_{rz}^{(1,2)}Z_r^{(1,2)}=0, \tag{17c}$$

$$\left(\frac{I_r^{(2)}}{r_r^{(2)2}}\right)\ddot{u}_r^{(2)}+\sum F_{rn}^{(2)}\cos\beta^{(2)}+c_{ru}^{(2)}\dot{u}_r^{(2)}+k_{ru}^{(2)}u_r^{(2)}-c_{ru}^{(1,2)}\dot{\delta}_r^{(1,2)}-k_{ru}^{(1,2)}\delta_r^{(1,2)}=\frac{T_r^{(1)}}{r_r^{(2)}}. \tag{17d}$$

(7) Equations of the sun gear in the 2nd stage are

$$m_s^{(2)}\left(\ddot{x}_s^{(2)}-2\Omega_c^{(2)}\dot{y}_s^{(2)}-\Omega_c^{(2)2}x_s^{(2)}\right)-\sum F_{sn}^{(2)}\sin\psi_{sn}^{(2)}\cos\beta^{(2)}+c_s^{(2)}\dot{x}_s^{(2)}+k_s^{(2)}x_s^{(2)}-c_{csx}^{(1,2)}\dot{X}_{cs}^{(1,2)}-k_{csx}^{(1,2)}X_{cs}^{(1,2)}=0, \tag{18a}$$

$$m_s^{(2)}\left(\ddot{y}_s^{(2)}+2\Omega_c^{(2)}\dot{x}_s^{(2)}-\Omega_c^{(2)2}y_s^{(2)}\right)+\sum F_{sn}^{(2)}\cos\psi_{sn}^{(2)}\cos\beta^{(2)}+c_s^{(2)}\dot{y}_s^{(2)}+k_s^{(2)}y_s^{(2)}-c_{csy}^{(1,2)}\dot{Y}_{cs}^{(1,2)}-k_{csy}^{(1,2)}Y_{cs}^{(1,2)}=0, \tag{18b}$$

$$m_s^{(i)}\ddot{z}_s^{(i)}+\sum F_{sn}^{(i)}\sin\beta^{(i)}+c_{sz}^{(i)}\dot{z}_s^{(i)}+k_{sz}^{(i)}z_s^{(i)}-c_{csz}^{(1,2)}\dot{Z}_{cs}^{(1,2)}-k_{csz}^{(1,2)}Z_{cs}^{(1,2)}=0, \tag{18c}$$

$$\left(\frac{I_s^{(2)}}{r_s^{(2)2}}\right)\ddot{u}_s^{(2)}+\sum F_{sn}^{(2)}\cos\beta^{(2)}+\dot{c}_{su}^{(2)}\dot{u}_s^{(2)}+k_{su}^{(2)}u_s^{(2)}-c_{csu}^{(1,2)}\dot{\delta}_{cs}^{(1,2)}-k_{csu}^{(1,2)}\delta_{cs}^{(1,2)}=\frac{T_s^{(2)}}{r_s^{(2)}}. \tag{18d}$$

(8) Equations of the planet in the 2nd stage are

$$m_p^{(2)}\left(\ddot{\xi}_n^{(2)}-2\Omega_c^{(2)}\dot{\eta}_n^{(2)}-\Omega_c^{(2)2}\xi_n^{(2)}\right)-F_{sn}^{(2)}\cos\beta^{(2)}\sin\alpha_{sp}^{(2)}+F_{rn}^{(2)}\cos\beta^{(2)}\sin\alpha_{rp}^{(2)}+c_{px}^{(2)}\dot{\delta}_{pnx}^{(2)}+k_{px}^{(2)}\delta_{pnx}^{(2)}=0 \tag{19a}$$

Table 1: Parameters of the example systems ($i = 1, 2$).

Parameter	High-speed stage			Ring	Low-speed stage	
	Sun	Planet	Carrier		Sun	Planet
Mass (Kg)	0.92	0.77	4.04	19	1.73	0.94
I (Kg·mm^2)	83.6	507.65	7814.7	156997	491.2	524.43
Rotational radius (mm)	11	32.25	57.8	120	21.5	30
Pressure angle	20°				20°	
Helix angle	5°				9°	
Mesh stiffness (N/m)	$k_{sn}^{(1)} = k_{rn}^{(1)} = 6.5 \times 10^8$				$k_{sn}^{(2)} = k_{rn}^{(2)} = 8 \times 10^8$	
Bearing stiffness (N/m)	$k_{jx}^{(i)} = k_{jy}^{(i)} = 1.2 \times 10^9$ $(j = c, s)$ $k_{rx}^{(i)} = k_{ry}^{(i)} = 1.3 \times 10^9$ $k_{px}^{(i)} = k_{py}^{(i)} = 1 \times 10^9$ $k_{jz}^{(i)} = 1.08 \times 10^9$ $(j = c, r, s)$					
Torsional stiffness (N/m)	$k_{ju}^{(i)} = 0$ $(j = s, r)$; $k_{cu}^{(1)} = 0$, $k_{cu}^{(2)} = 1 \times 10^9$					
Coupling stiffness (N/m)	$k_{rx}^{(1,2)} = k_{ry}^{(1,2)} = 2 \times 10^9$, $k_{rz}^{(1,2)} = 2.3 \times 10^{10}$, $k_{ru}^{(1,2)} = 1.5 \times 10^{10}$ $k_{csx}^{(1,2)} = k_{csy}^{(1,2)} = 2 \times 10^9$, $k_{rz}^{(1,2)} = 3.5 \times 10^{10}$, $k_{csu}^{(1,2)} = 1.2 \times 10^{10}$					

$$m_p^{(2)}\left(\ddot{\eta}_n^{(2)} + 2\Omega_c^{(2)}\dot{\xi}_n^{(2)} - \Omega_c^{(2)2}\eta_n^{(2)}\right) - F_{sn}^{(2)}\cos\beta^{(2)}\cos\alpha_{sp}^{(2)} - F_{rn}^{(2)}\cos\beta^{(2)}\cos\alpha_{rp}^{(2)} + c_{py}^{(2)}\dot{\delta}_{pny}^{(2)} + k_{py}^{(2)}\delta_{pny}^{(2)} = 0 \tag{19b}$$

$$m_p^{(2)}\ddot{v}_n^{(2)} - F_{sn}^{(2)}\sin\beta^{(2)} - F_{rn}^{(2)}\sin\beta^{(2)} - c_{pz}^{(2)}\dot{\delta}_{cnz}^{(2)} - k_{pz}^{(2)}\delta_{cnz}^{(2)} = 0 \tag{19c}$$

$$\left(\frac{I_p^{(2)}}{r_p^{(2)2}}\right)\ddot{u}_p^{(2)} + F_{sn}^{(2)}\cos\beta^{(2)} - F_{rn}^{(2)}\cos\beta^{(2)} = 0, \quad n = 1, \ldots, N_2, \tag{19d}$$

where the summation index n ranges from 1 to N_i in equations of stage i.

Assembling the dynamic equations in matrix form yields

$$\mathbf{M}\ddot{\mathbf{q}} + \left[\mathbf{c}_b + \mathbf{c}_m + \boldsymbol{\omega}_\mathbf{c}\mathbf{G}\right]\dot{\mathbf{q}} + \left[\mathbf{K}_b + \mathbf{K}_m - \boldsymbol{\omega}_\mathbf{c}^2\mathbf{K}_\boldsymbol{\Omega}\right]\mathbf{q} = \mathbf{T}(t), \tag{20}$$

where $\mathbf{M}$ is the positive definite mass matrix and $\boldsymbol{\omega}_\mathbf{c}$ is the velocity matrix, $\mathbf{K}_b$ is the bearing stiffness matrix, and $\mathbf{K}_m$ is the meshing stiffness matrix. $\mathbf{C}_b$ and $\mathbf{C}_m$ are the corresponding damping terms. $\mathbf{G}$ is the gyroscopic matrix and $\mathbf{K}_\boldsymbol{\Omega}$ is the stiffness matrix induced by gyroscopic effect. The matrix components are given in Appendix.

3. Vibration Modes of the Example System

The damping and external excitation are ignored to investigate the free vibration characteristics of the system. Besides, Coriolis acceleration of gears is neglected and all gyroscopic effects are excluded when the carrier speed is low [3]. These assumptions are valid for the example system, since the system is used in cranes with low velocity of carriers. The simplified equations of motion and associated eigenvalue equations are

$$\mathbf{M}\ddot{\mathbf{q}} + \left[\mathbf{K}_b + \mathbf{K}_m\right]\mathbf{q} = \mathbf{0}, \tag{21}$$

$$\left(\mathbf{K}_b + \mathbf{K}_m - \omega_i^2\mathbf{M}\right)\phi_i = \mathbf{0}, \tag{22}$$

where ω_i is the natural frequency and the corresponding modal vectors ϕ_i are expressed as $\phi_i = [\mathbf{p}_c^{(1)}, \mathbf{p}_r^{(1)}, \mathbf{p}_s^{(1)}, \mathbf{p}_1^{(1)}, \ldots, \mathbf{p}_{N_1}^{(1)}, \mid \mathbf{p}_c^{(2)}, \mathbf{p}_r^{(2)}, \mathbf{p}_s^{(2)}, \mathbf{p}_1^{(2)}, \ldots, \mathbf{p}_{N_2}^{(2)}]$. The mesh stiffness of the system is calculated by Ishikawa tooth deformation calculation formula and stiffness calculation formula. Because rings of two stages are coupled by the shell and the carrier of the 1st-stage PGT and the sun gear of the 2nd PGT are linked by the spline. The coupling stiffness amongst rings of two stages equals the stiffness of the shell between two rings and stiffness between the carrier of the 1st-stage PGT and the sun gear of the 2nd-stage PGT is dependent on the spline. The system parameters are listed in Table 1.

It is assumed that planets in both stages are equally spaced. The systems with $\mathbf{N}_1 = 3$ and $\mathbf{N}_2 = 3\sim9$ are simulated here to illustrate the structured vibration modes of two-stage HPGs. According to the modal theory, natural modes are grouped according to the multiplicity of the natural frequencies. The natural frequencies and mode types of the system are shown in Table 2.

From Table 2, the vibration modes can be recognized as 3 groups: the axial translational-rotational mode, the radical translational mode, and the second-stage planet mode ($N_2 > 3$). Following results can be concluded.

(a) The first-order natural frequency is $\omega_1 = 0$ and the associated vibration mode is the rigid body mode. The multiplicity of this mode is 1. As shown in Table 2, this mode can be concluded in the axial translational-rotational mode.

Table 2: Natural frequencies (Hz) and mode types for the example HPGs.

Multiplicity	$\mathbf{N}_2$ 3	4	5	6	7	8	9	Mode type
$m = 1$	0	0	0	0	0	0	0	Axial translational-rotational mode
	496.02	509.75	517.49	521.95	524.43	525.61	525.91	
	962.35	958.11	953.4	948.5	943.54	938.59	933.7	
	1934.2	1871.8	1813.5	1758.6	1706.9	1658.6	1613.9	
	2060.1	1994.5	1910.6	1840.5	1781.7	1731.4	1687.3	
	2108.3	2068.5	2066.2	2065.2	2064.6	2064	2063.5	
	3106.9	3106.6	3106.6	3106.5	3106.4	3106.3	3106.2	
	3392	3393.6	3394.1	3394.3	3394.3	3394.3	3394.2	
	4063.9	4111.3	4121.1	4124.6	4126.3	4127.4	4128	
	4180.5	4238.7	4283.3	4312.6	4333.4	4349.2	4361.8	
	4853.5	5138.5	5415.4	5664.8	5883.1	6063.3	6127.6	
	6140.1	6140.8	6141.6	6142.8	6145.7	6159.9	6266.9	
	6425	6425	6425	6425	6425	6425	6425	
	7622	7811.8	8008.5	8213.8	8427.1	8646.2	8867.7	
	8209.9	8748.5	9065.7	9130.9	9146.6	9153.9	9159.3	
	8934.8	9159	9305.8	9497	9507.9	9513.7	9520.8	
	9214.5	9345.8	9506	9583.4	9838.5	10086	10277	
	9498.4	9501.9	9728.5	10203	10277	10277	10324	
	10277	10277	10277	10280	10701	11186	11658	
	25977	25981	25985	25990	25994	25999	26004	
$m = 2$	1187.9	1179.4	1171	1162.6	1154.2	1146	1137.8	Radical translational mode
	1525.6	1566.3	1592.7	1609.1	1618.5	1622.9	1623.8	
	1961.5	1954	1946.6	1939.4	1932.3	1925.4	1918.7	
	2191.6	2214.6	2236.1	2255.3	2272	2286	2297.5	
	3280.2	3280.8	3281.6	3282.4	3283.2	3284.1	3285	
	4144.1	4126.6	4110.7	4097.4	4087.2	4079.6	4074.5	
	4705.3	4754.8	4798.1	4831	4853.8	4868.7	4878.4	
	5214.7	5217.2	5244.9	5294.1	5359.8	5437	5521	
	5897.9	5898.1	5898.3	5898.6	5899	5899.5	5900.3	
	6164.4	6168.1	6170.5	6172.3	6173.8	6175.2	6176.5	
	6483.5	6489.4	6493	6495.4	6497.1	6498.5	6499.6	
	7241.6	7283.9	7324.9	7365.2	7404.7	7443.3	7481	
	7545.7	7798	7962.5	8036.5	8073.2	8098.7	8120.6	
	8131.9	8186.1	8310.4	8510.9	8737.3	8965.9	9190.4	
$m = \mathbf{N}_2 - 3$	—	4155.7	4155.7	4155.7	4155.7	4155.7	4155.7	Planet mode
		5897.3	5897.3	5897.3	5897.3	5897.3	5897.3	
		7121.8	7121.8	7121.8	7121.8	7121.8	7121.8	
		8074.7	8074.7	8074.7	8074.7	8074.7	8074.7	

(b) Twenty natural frequencies always have multiplicity $m = 1$ for different $\mathbf{N}_1$ and $\mathbf{N}_2$. The corresponding vibration mode is the axial translational-rotational mode. This mode type is mainly characterized by the motions of central members which only rotate and translate axially. Furthermore, deflections of planets in the same stage are identical. The typical axial translational-rotational mode with $N_1 = 3$, $N_2 = 4$, and $\omega = 5138.5$ Hz is shown in Figure 5.

(c) There are always fourteen pairs of natural frequencies with multiplicity $m = 2$ for various $\mathbf{N}_1$ and $\mathbf{N}_2$, and the corresponding vibration mode is the radical translational mode. In these modes, all central members have pure translation radically. Figure 6 shows the mode shape of radical translational mode with $N_1 = 3$, $N_2 = 4$, and $\omega = 2214.6$ Hz.

(d) As shown in Table 2, four degenerate natural frequencies with multiplicity $m = \mathbf{N}_2 - 3$ are always calculated when $\mathbf{N}_2 > 3$. Associated modes are the 2nd-stage planet modes. In these modes, all central members are stationary and only planets in the 2nd stage have movements. The planets move in all four degrees

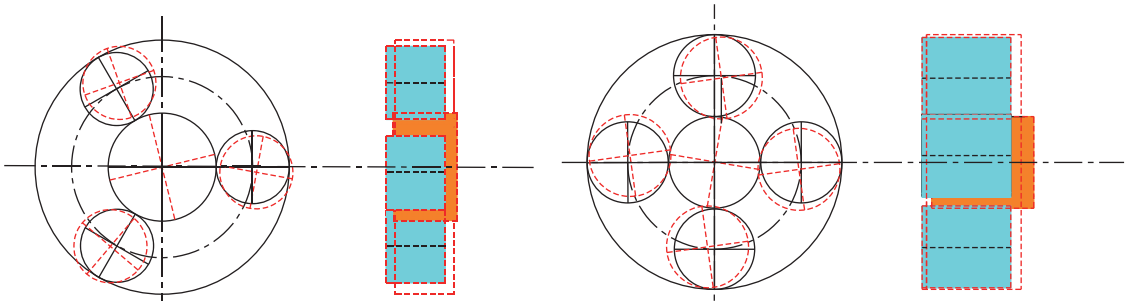

(a) Stage 1 (b) Stage 2

Figure 5: Mode shapes at 5138.5 Hz with $N_1 = 3$ and $N_2 = 4$.

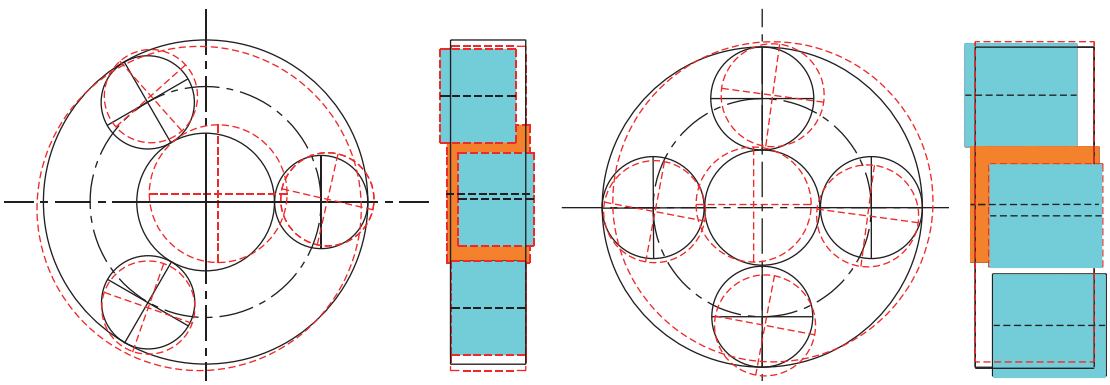

(a) Stage 1 (b) Stage 2

Figure 6: Mode shapes at 2214.6 Hz with $N_1 = 3$ and $N_2 = 4$.

of freedom (DOFs), and their modal deflection is a scalar multiple to that of the arbitrarily selected first planet. Figure 7 illustrates the typical second-stage planet mode.

(e) It is concluded that the natural frequency varies monotonically as additional planets in stage two introduced.

In most planetary gears, the number of planets in any stage is more than 3. This structure brings the systems distinguishing advantage of power-split. In the following discussion, the eigensolution properties summarized in the example are analytically shown to be true for general HPGs.

4. Analytical Characterization of Vibration Modes

The eigenvalue matrix equations (21) are expanded to $(6 + N_1 + N_2)$ groups of equations associated with the individual members

$$\left[\mathbf{K}_{cb}^{(1)} + \mathbf{K}_{cs}^{(1)c} + \sum \mathbf{K}_{c1}^{(1)n} - \omega_i^2 \mathbf{M}_c^{(1)}\right] \mathbf{p}_c^{(1)} + \sum \mathbf{K}_{c2}^{(1)n} \mathbf{p}_n^{(1)} - \mathbf{K}_{cs}^{(2)s} \mathbf{p}_s^{(2)} = \mathbf{0}, \tag{23a}$$

$$\left[\mathbf{K}_{rb}^{(1)} + \mathbf{K}_{r}^{(1)r} + \sum \mathbf{K}_{r1}^{(1)n} - \omega_i^2 \mathbf{M}_r^{(1)}\right] \mathbf{p}_r^{(1)} + \sum \mathbf{K}_{r2}^{(1)n} \mathbf{p}_n^{(1)} - \mathbf{K}_{r}^{(2)r} \mathbf{p}_r^{(2)} = \mathbf{0}, \tag{23b}$$

$$\left[\mathbf{K}_{sb}^{(1)} + \sum \mathbf{K}_{s1}^{(1)n} - \omega_i^2 \mathbf{M}_s^{(1)}\right] \mathbf{p}_s^{(1)} + \sum \mathbf{K}_{s2}^{(1)n} \mathbf{p}_n^{(1)} = \mathbf{0}, \tag{23c}$$

$$\left[\mathbf{K}_{c2}^{(1)n}\right]^T \mathbf{p}_c^{(1)} - \left[\mathbf{K}_{r2}^{(1)n}\right]^T \mathbf{p}_r^{(1)} + \left[\mathbf{K}_{s2}^{(1)n}\right]^T \mathbf{p}_s^{(1)} + \left[\mathbf{K}_{pp}^{(1)n} - \omega_i^2 \mathbf{M}_p^{(1)}\right] \mathbf{p}_n^{(1)} = \mathbf{0}, \tag{23d}$$

$$\left[\mathbf{K}_{cb}^{(2)} + \sum \mathbf{K}_{c1}^{(2)n} - \omega_i^2 \mathbf{M}_c^{(2)}\right] \mathbf{p}_c^{(2)} + \sum \mathbf{K}_{c2}^{(2)n} \mathbf{p}_n^{(2)} = \mathbf{0}, \tag{24a}$$

$$\left[\mathbf{K}_{rb}^{(2)} + \mathbf{K}_{r}^{(2)r} + \sum \mathbf{K}_{r1}^{(2)n} - \omega_i^2 \mathbf{M}_r^{(2)}\right] \mathbf{p}_r^{(2)} + \sum \mathbf{K}_{r2}^{(2)n} \mathbf{p}_n^{(2)} - \mathbf{K}_{r}^{(1)r} \mathbf{p}_r^{(1)} = \mathbf{0}, \tag{24b}$$

$$\left[\mathbf{K}_{sb}^{(2)} + \mathbf{K}_{cs}^{(2)s} + \sum \mathbf{K}_{s1}^{(2)n} - \omega_i^2 \mathbf{M}_s^{(2)}\right] \mathbf{p}_s^{(2)} + \sum \mathbf{K}_{s2}^{(2)n} \mathbf{p}_n^{(1)} - \mathbf{K}_{cs}^{(1)c} \mathbf{p}_c^{(1)} = \mathbf{0}, \tag{24c}$$

$$\left[\mathbf{K}_{c2}^{(2)n}\right]^T \mathbf{p}_c^{(2)} - \left[\mathbf{K}_{r2}^{(2)n}\right]^T \mathbf{p}_r^{(2)} + \left[\mathbf{K}_{s2}^{(2)n}\right]^T \mathbf{p}_s^{(2)} + \left[\mathbf{K}_{pp}^{(2)n} - \omega_i^2 \mathbf{M}_p^{(2)}\right] \mathbf{p}_n^{(2)} = \mathbf{0}, \tag{24d}$$

where $\mathbf{0}$ has dimension 4×1.

4.1. Axial Translational-Rotational Mode. According to the above vibration mode analysis, the axial translational-rotational mode has the following characteristics:

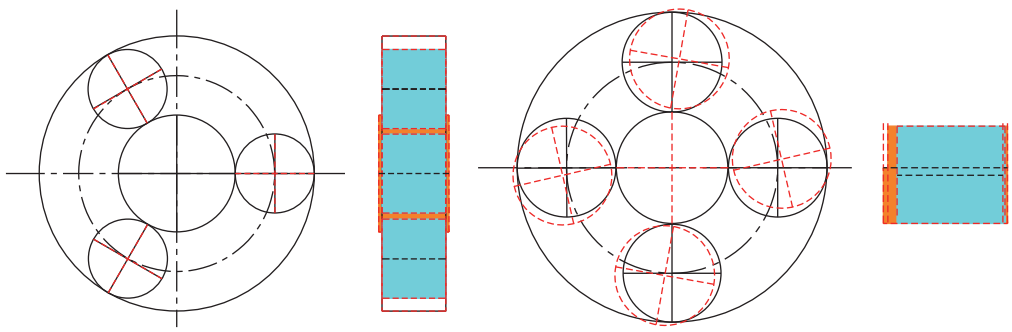

(a) Stage 1 (b) Stage 2

Figure 7: Mode shapes at 7121.8 Hz with $N_1 = 3$ and $N_2 = 4$.

(a) The corresponding multiplicity of natural frequency is 1.

(b) The radical deflections of carrier, ring gear, and sun gear in two stages are zero

$$\mathbf{p}_j^{(i)} = \left[x_j^{(i)}, y_j^{(i)}, z_j^{(i)}, u_j^{(i)}\right]^T = \left[0, 0, z_j^{(i)}, u_j^{(i)}\right]^T, \quad (j = c, r, s;\ i = 1, 2). \tag{25}$$

(c) The modal deflections of planets in the same stage are identical

$$\begin{aligned}\mathbf{p}_n^{(i)} &= \left[\xi_n^{(i)}, \eta_n^{(i)}, v_n^{(i)}, u_n^{(i)}\right]^T = \mathbf{p}_1^{(i)} \\ &= \left[\xi_1^{(i)}, \eta_1^{(i)}, v_1^{(i)}, u_1^{(i)}\right]^T, \quad (i = 1, 2).\end{aligned} \tag{26}$$

The eigenvectors of the 1st stage and 2nd stage can be expressed as

$$\phi_i^{(1)} = \left[\mathbf{p}_c^{(1)}, \mathbf{p}_r^{(1)}, \mathbf{p}_s^{(1)}, \mathbf{p}_1^{(1)}, \ldots, \mathbf{p}_1^{(1)}\right]^T \tag{27a}$$

$$\phi_i^{(2)} = \left[\mathbf{p}_c^{(2)}, \mathbf{p}_r^{(2)}, \mathbf{p}_s^{(2)}, \mathbf{p}_1^{(2)}, \ldots, \mathbf{p}_1^{(2)}\right]^T. \tag{27b}$$

Inserting (25)–((27a) and (27b)) into (23a) yields

$$\begin{aligned}&\left(k_{cz}^{(1)} + k_{csz}^{(1,2)} + N_1 k_{pz}^{(1)} - \frac{\omega_i^2 I_c^{(1)}}{r_c^{(1)2}}\right) z_c^{(1)} - N_1 k_{pz}^{(1)} z_1^{(1)} \\ &\quad - k_{csz}^{(1,2)} z_s^{(1)} = 0,\end{aligned} \tag{28a}$$

$$\begin{aligned}&\left(k_{cu}^{(1)} + k_{csu}^{(1,2)} + N_1 k_p^{(1)} - \frac{\omega_i^2 I_c^{(1)}}{r_c^{(1)2}}\right) u_c^{(1)} - N_1 k_p^{(1)} u_1^{(1)} \\ &\quad - k_{csu}^{(1,2)} u_s^{(1)} = 0.\end{aligned} \tag{28b}$$

Similarly, inserting (25)–(27a) into (23b)-(23c) yields

$$\begin{aligned}&\left(k_{rz}^{(1)} + k_{rz}^{(1,2)} + N_1 k_{rn}^{(1)} \mathrm{s}^2\beta^{(1)} - \frac{\omega_i^2 I_r^{(1)}}{r_r^{(1)2}}\right) z_r^{(1)} \\ &\quad - N_1 \mathrm{s}\beta^{(1)} \mathrm{c}\beta^{(1)} u_r^{(1)} - k_{rz}^{(1,2)} z_r^{(2)} \\ &\quad + N_1 k_{rn}^{(1)} \left(-\zeta_1^{(1)} \mathrm{s}\beta^{(1)} \mathrm{c}\beta^{(1)} \mathrm{s}\alpha^{(1)}\right. \\ &\quad \left. + \eta_1^{(1)} \mathrm{s}\beta^{(1)} \mathrm{c}\beta^{(1)} \mathrm{c}\alpha^{(1)} - \mathrm{s}^2\beta^{(1)} v_1^{(1)} + \mathrm{s}\beta^{(1)} \mathrm{c}\beta^{(1)} u_1^{(1)}\right) \\ &\quad = 0,\end{aligned} \tag{29a}$$

$$\begin{aligned}&\left(k_{ru}^{(1)} + k_{ru}^{(1,2)} + N_1 k_{rn}^{(1)} \mathrm{c}^2\beta^{(1)} - \frac{\omega_i^2 I_r^{(1)}}{r_r^{(1)2}}\right) u_r^{(1)} \\ &\quad - N_1 \mathrm{s}\beta^{(1)} \mathrm{c}\beta^{(1)} z_r^{(1)} - k_{ru}^{(1,2)} u_r^{(2)} \\ &\quad + N_1 k_{rn}^{(1)} \left(\zeta_1^{(1)} \mathrm{c}^2\beta^{(1)} \mathrm{s}\alpha^{(1)} - \eta_1^{(1)} \mathrm{c}^2\beta^{(1)} \mathrm{c}\alpha^{(1)}\right. \\ &\quad \left. + \mathrm{s}\beta^{(1)} \mathrm{c}\beta^{(1)} v_1^{(1)} - \mathrm{c}^2\beta^{(1)} u_1^{(1)}\right) = 0,\end{aligned} \tag{29b}$$

$$\begin{aligned}&\left(k_{sz}^{(1)} + N_1 k_{sn}^{(1)} \mathrm{s}^2\beta^{(1)} - \frac{\omega_i^2 I_s^{(1)}}{r_s^{(1)2}}\right) z_s^{(1)} \\ &\quad + N_1 \mathrm{s}\beta^{(1)} \mathrm{c}\beta^{(1)} u_s^{(1)} - N_1 k_{sn}^{(1)} \left(\zeta_1^{(1)} \mathrm{s}\beta^{(1)} \mathrm{c}\beta^{(1)} \mathrm{s}\alpha^{(1)}\right. \\ &\quad \left. + \eta_1^{(1)} \mathrm{s}\beta^{(1)} \mathrm{c}\beta^{(1)} \mathrm{c}\alpha^{(1)} + v_1^{(1)} \mathrm{s}^2\beta^{(1)} - u_1^{(1)} \mathrm{s}\beta^{(1)} \mathrm{c}\beta^{(1)}\right) \\ &\quad = 0,\end{aligned} \tag{30a}$$

$$\begin{aligned}&\left(k_{su}^{(1)} + N_1 k_{sn}^{(1)} \mathrm{c}^2\beta^{(1)} - \frac{\omega_i^2 I_s^{(1)}}{r_s^{(1)2}}\right) u_s^{(1)} \\ &\quad + N_1 \mathrm{s}\beta^{(1)} \mathrm{c}\beta^{(1)} z_s^{(1)} - N_1 k_{sn}^{(1)} \left(\zeta_1^{(1)} \mathrm{c}^2\beta^{(1)} \mathrm{s}\alpha^{(1)}\right. \\ &\quad \left. + \eta_1^{(1)} \mathrm{c}^2\beta^{(1)} \mathrm{c}\alpha^{(1)} + v_1^{(1)} \mathrm{s}\beta^{(1)} \mathrm{c}\beta^{(1)} - u_1^{(1)} \mathrm{c}^2\beta^{(1)}\right) \\ &\quad = 0,\end{aligned} \tag{30b}$$

where $\mathrm{s}\psi_{jn}^{(i)} = \sin\psi_{jn}^{(i)}$, $\mathrm{c}\psi_{jn}^{(i)} = \cos\psi_{jn}^{(i)}$, $\mathrm{s}\alpha^{(i)} = \sin\alpha^{(i)}$, $\mathrm{c}\alpha^{(i)} = \cos\alpha^{(i)}$, $\mathrm{s}\beta^{(i)} = \sin\beta^{(i)}$, and $\mathrm{c}\beta^{(i)} = \cos\beta^{(i)}$. Equation (23d) can be simplified as

$$\begin{aligned}&\left[\mathbf{K}_{c2}^{(1)n}\right]^T \mathbf{p}_c^{(1)} - \left[\mathbf{K}_{r2}^{(1)n}\right]^T \mathbf{p}_r^{(1)} + \left[\mathbf{K}_{s2}^{(1)n}\right]^T \mathbf{p}_s^{(1)} \\ &\quad + \left[\mathbf{K}_{pp}^{(1)n} - \omega_i^2 \mathbf{M}_p^{(1)}\right] \mathbf{p}_n^{(1)} = \left[\mathbf{K}_{c2}^{(1)1}\right]^{\mathbf{T}} \mathbf{p}_c^{(1)}\end{aligned}$$

$$-\left[\mathbf{K}_{r2}^{(1)1}\right]^{\mathbf{T}}\mathbf{p}_r^{(1)}+\left[\mathbf{K}_{s2}^{(1)1}\right]^{\mathbf{T}}\mathbf{p}_s^{(1)}+\left[\mathbf{K}_{pp}^{(1)}-\omega_i^{(1)}\mathbf{M}_p^{(1)}\right]\mathbf{p}_1^{(1)}=\mathbf{0}. \tag{31}$$

Inserting (25)–(27b) into (24a), we get

$$\left(k_{cz}^{(2)}+N_2k_{pz}^{(2)}-\frac{\omega_i^2I_c^{(2)}}{r_c^{(2)2}}\right)z_c^{(2)}-N_2k_{pz}^{(2)}z_1^{(2)}=0, \tag{32a}$$

$$\left(k_{cu}^{(2)}+N_2k_p^{(2)}-\frac{\omega_i^2I_c^{(2)}}{r_c^{(2)2}}\right)u_c^{(2)}-N_2k_p^{(2)}u_1^{(2)}=0. \tag{32b}$$

In the same way, (24b)-(24c) reduce to

$$\begin{aligned}&\left(k_{rz}^{(2)}+k_{rz}^{(1,2)}+N_2k_{rn}^{(2)}\mathrm{s}^2\beta^{(2)}-\frac{\omega_i^2I_r^{(2)}}{r_r^{(2)2}}\right)z_r^{(2)}\\&-N_2\mathrm{s}\beta^{(2)}\mathrm{c}\beta^{(2)}u_r^{(2)}+N_2k_{rn}^{(2)}\left(-\zeta_1^{(2)}\mathrm{s}\beta^{(2)}\mathrm{c}\beta^{(2)}\mathrm{s}\alpha^{(2)}\right.\\&\left.+\eta_1^{(2)}\mathrm{s}\beta^{(2)}\mathrm{c}\beta^{(2)}\mathrm{c}\alpha^{(2)}-\mathrm{s}^2\beta^{(2)}v_1^{(2)}+\mathrm{s}\beta^{(2)}\mathrm{c}\beta^{(2)}u_1^{(2)}\right)\\&-k_{rz}^{(1,2)}z_r^{(1)}=0,\end{aligned} \tag{33a}$$

$$\begin{aligned}&\left(k_{ru}^{(2)}+k_{ru}^{(1,2)}+N_2k_{rn}^{(2)}\mathrm{c}^2\beta^{(2)}-\frac{\omega_i^2I_r^{(2)}}{r_r^{(2)2}}\right)u_r^{(1)}\\&-N_2\mathrm{s}\beta^{(2)}\mathrm{c}\beta^{(2)}z_r^{(2)}+N_2k_{rn}^{(2)}\left(\zeta_1^{(2)}\mathrm{c}^2\beta^{(2)}\mathrm{s}\alpha^{(2)}\right.\\&\left.-\eta_1^{(2)}\mathrm{c}^2\beta^{(2)}\mathrm{c}\alpha^{(2)}+\mathrm{s}\beta^{(2)}\mathrm{c}\beta^{(2)}v_1^{(2)}-\mathrm{c}^2\beta^{(2)}u_1^{(2)}\right)\\&-k_{ru}^{(1,2)}u_r^{(1)}=0,\end{aligned} \tag{33b}$$

$$\begin{aligned}&\left(k_{sz}^{(2)}+k_{csz}^{(1,2)}+N_2k_{sn}^{(2)}\mathrm{s}^2\beta^{(2)}-\frac{\omega_i^2I_s^{(2)}}{r_s^{(2)2}}\right)z_s^{(2)}\\&+N_2\mathrm{s}\beta^{(2)}\mathrm{c}\beta^{(2)}u_s^{(2)}-N_2k_{sn}^{(2)}\left(\zeta_1^{(2)}\mathrm{s}\beta^{(2)}\mathrm{c}\beta^{(2)}\mathrm{s}\alpha^{(2)}\right.\\&\left.+\eta_1^{(2)}\mathrm{s}\beta^{(2)}\mathrm{c}\beta^{(2)}\mathrm{c}\alpha^{(2)}+v_1^{(2)}\mathrm{s}^2\beta^{(2)}-u_1^{(2)}\mathrm{s}\beta^{(2)}\mathrm{c}\beta^{(2)}\right)\\&-k_{csz}^{(1,2)}z_c^{(1)}=0,\end{aligned} \tag{34a}$$

$$\begin{aligned}&\left(k_{su}^{(2)}+k_{csu}^{(1,2)}+N_2k_{sn}^{(2)}\mathrm{c}^2\beta^{(2)}-\frac{\omega_i^2I_s^{(2)}}{r_s^{(2)2}}\right)u_s^{(1)}\\&+N_2\mathrm{s}\beta^{(2)}\mathrm{c}\beta^{(2)}z_s^{(2)}-N_2k_{sn}^{(2)}\left(\zeta_1^{(2)}\mathrm{c}^2\beta^{(2)}\mathrm{s}\alpha^{(2)}\right.\\&\left.+\eta_1^{(2)}\mathrm{c}^2\beta^{(2)}\mathrm{c}\alpha^{(2)}+v_1^{(2)}\mathrm{s}\beta^{(2)}\mathrm{c}\beta^{(2)}-u_1^{(2)}\mathrm{c}^2\beta^{(2)}\right)\\&-k_{csu}^{(1,2)}u_c^{(1)}=0.\end{aligned} \tag{34b}$$

Applying the mode characteristics (b) and (c), (24d) becomes

$$\begin{aligned}&\left[\mathbf{K}_{c2}^{(2)n}\right]^T\mathbf{p}_c^{(2)}-\left[\mathbf{K}_{r2}^{(2)n}\right]^T\mathbf{p}_r^{(2)}+\left[\mathbf{K}_{s2}^{(2)n}\right]^T\mathbf{p}_s^{(2)}\\&+\left[\mathbf{K}_{pp}^{(2)n}-\omega_i^2\mathbf{M}_p^{(2)}\right]\mathbf{p}_n^{(2)}=\left[\mathbf{K}_{c2}^{(2)1}\right]^{\mathbf{T}}\mathbf{p}_c^{(2)}\\&-\left[\mathbf{K}_{r2}^{(2)1}\right]^{\mathbf{T}}\mathbf{p}_r^{(2)}+\left[\mathbf{K}_{s2}^{(2)1}\right]^{\mathbf{T}}\mathbf{p}_s^{(1)}\\&+\left[\mathbf{K}_{pp}^{(2)}-\omega_i^{(2)}\mathbf{M}_p^{(2)}\right]\mathbf{p}_1^{(2)}=\mathbf{0}.\end{aligned} \tag{35}$$

The above equations imply that (23a)–(24d) reduce to a 20-degree-of-freedom eigenvalue problem consisting of (28a)–(35). The modal vector $\mathbf{q}$ is determined by the reduced eigenvalue

$$\begin{aligned}&\left[z_c^{(1)},u_c^{(1)},z_r^{(1)},u_r^{(1)},z_s^{(1)},u_s^{(1)},\xi_1^{(1)},\eta_1^{(1)},v_1^{(1)},u_1^{(1)},z_c^{(2)},u_c^{(2)},\right.\\&\left.z_r^{(2)},u_r^{(2)},z_s^{(2)},u_s^{(2)},\xi_1^{(2)},\eta_1^{(2)},v_1^{(2)},u_1^{(2)}\right]^T.\end{aligned} \tag{36}$$

Twenty eigensolutions are derived from this reduced eigenvalue problem. Therefore, there are 20 axial translational-rotational modes and the corresponding natural frequency is distinct.

4.2. Radical Translational Mode. To sum up, the radical translational mode has the following characteristics:

(a) The natural frequency multiplicity of the radical translational mode is 2. There is a pair of orthonormal vibration modes associated with each natural frequency

$$\begin{aligned}\phi_i&=\left[\mathbf{p}_c^{(1)},\mathbf{p}_r^{(1)},\mathbf{p}_s^{(1)},\mathbf{p}_1^{(1)},\ldots,\mathbf{p}_{N_1}^{(1)},\mathbf{p}_c^{(2)},\mathbf{p}_r^{(2)},\mathbf{p}_s^{(2)},\mathbf{p}_1^{(2)},\ldots,\right.\\&\left.\mathbf{p}_{N_2}^{(2)}\right]^T,\\\overline{\phi}_i&=\left[\overline{\mathbf{p}}_c^{(1)},\overline{\mathbf{p}}_r^{(1)},\overline{\mathbf{p}}_s^{(1)},\overline{\mathbf{p}}_1^{(1)},\ldots,\overline{\mathbf{p}}_{N_1}^{(1)},\overline{\mathbf{p}}_c^{(2)},\overline{\mathbf{p}}_r^{(2)},\overline{\mathbf{p}}_s^{(2)},\overline{\mathbf{p}}_1^{(2)},\ldots,\right.\\&\left.\overline{\mathbf{p}}_{N_2}^{(2)}\right]^T.\end{aligned} \tag{37}$$

(b) The axial translation and rotation of central members in both stages are zero. Besides, the relation of the modal deflections of central members in a pair of orthonormal vibration modes is

$$\begin{aligned}\mathbf{p}_j^{(i)}&=\left[x_j^{(i)},y_j^{(i)},z_j^{(i)},u_j^{(i)}\right]^T=\left[x_j^{(i)},y_j^{(i)},0,0,\right]^T,\\\overline{\mathbf{p}}_j^{(i)}&=\left[-y_j^{(i)},x_j^{(i)},z_j^{(i)},u_j^{(i)}\right]^T=\left[-y_j^{(i)},x_j^{(i)},0,0,\right]^T,\\&\qquad\left(j=c,r,s;\ i=1,2\right).\end{aligned} \tag{38}$$

(c) The modal deflections of planets of same stage in a pair of orthonormal vibration modes can be expressed as

$$\begin{aligned}\mathbf{p}_n^{(i)}&=\mathbf{p}_1^{(i)}\cos\psi_n^{(i)}+\overline{\mathbf{p}}_1^{(i)}\sin\psi_n^{(i)}\\\overline{\mathbf{p}}_n^{(i)}&=-\mathbf{p}_1^{(i)}\sin\psi_n^{(1)}+\overline{\mathbf{p}}_1^{(i)}\cos\psi_n^{(i)},\end{aligned} \tag{39}$$

where $\mathbf{p}_n^{(i)}=[\xi_n^{(i)},\eta_n^{(i)},v_n^{(i)},u_n^{(i)}]^T$ and $\overline{\mathbf{p}}_n^{(i)}=[\overline{\xi}_n^{(i)},\overline{\eta}_n^{(i)},\overline{v}_n^{(i)},\overline{u}_n^{(i)}]^T$ are the modal deflections of planets in a pair of orthonormal vibration modes.

Thus, a pair of candidate orthonormal radical translational modes of the 1st stage is given by

$$\phi_i^{(1)} = \left[\mathbf{p}_c^{(1)}, \mathbf{p}_r^{(1)}, \mathbf{p}_s^{(1)}, \cos\phi_1^{(1)}\mathbf{p}_1^{(1)} + \sin\phi_1^{(1)}\overline{\mathbf{p}}_1^{(1)}, \ldots, \cos\phi_{N_1}^{(1)}\mathbf{p}_1^{(1)} + \sin\phi_{N_1}^{(1)}\overline{\mathbf{p}}_1^{(1)}\right]^T, \tag{40a}$$

$$\overline{\phi}_i^{(1)} = \left[\overline{\mathbf{p}}_c^{(1)}, \overline{\mathbf{p}}_r^{(1)}, \overline{\mathbf{p}}_s^{(1)}, \cos\phi_1^{(1)}\overline{\mathbf{p}}_1^{(1)} - \sin\phi_1^{(1)}\mathbf{p}_1^{(1)}, \ldots, \cos\phi_{N_1}^{(1)}\overline{\mathbf{p}}_1^{(1)} - \sin\phi_{N_1}^{(1)}\mathbf{p}_1^{(1)}\right]^T. \tag{40b}$$

Analogous to the analyses of the axial translational-rotational mode, substituting (38)–(40b) into (23a) yields

$$\left[k_{cx}^{(1)} + k_{csx}^{(1,2)} + N_1 k_p^{(1)} - \omega_i^2 m_c^{(1)}\right] x_c^{(1)} - \frac{N_1}{2} k_p^{(1)}\left(\xi_1^{(1)} - \overline{\eta}_1^{(1)}\right) - k_{csx}^{(1,2)} x_s^{(2)} = 0, \tag{41a}$$

$$\left[k_{cy}^{(1)} + k_{csy}^{(1,2)} + N_1 k_p^{(1)} - \omega_i^2 m_c^{(1)}\right] x_c^{(1)} - \frac{N_1}{2} k_p^{(1)}\left(\overline{\xi}_1^{(1)} + \eta_1^{(1)}\right) - k_{csx}^{(1,2)} x_s^{(2)} = 0. \tag{41b}$$

Similarly, the following (42a)–(43b) are derived by inserting (38)–(40b) into (23b)-(23c).

$$\left[k_{rx}^{(1)} + k_{rx}^{(1,2)} + \frac{N_1}{2} k_{rn}^{(1)} - \omega_i^2 m_r^{(1)}\right] x_r^{(1)} - k_{rx}^{(1,2)} x_r^{(2)} - \frac{N_1}{2} k_{rn}^{(1)}\left[\zeta_1^{(1)} s^2\alpha^{(1)} + s\alpha^{(1)} c\alpha^{(1)}\left(\overline{\zeta}_1^{(1)} - \eta_1^{(1)}\right) - \overline{\eta}_1^{(1)} c^2\alpha^{(1)}\right] c^2\beta^{(1)} = 0, \tag{42a}$$

$$\left[k_{ry}^{(1)} + k_{ry}^{(1,2)} + \frac{N_1}{2} k_{rn}^{(1)} - \omega_i^2 m_r^{(1)}\right] y_r^{(1)} - k_{ry}^{(1,2)} y_r^{(2)} + \frac{N_1}{2} k_{rn}^{(1)}\left[\overline{\zeta}_1^{(1)} s^2\alpha^{(1)} + s\alpha^{(1)} c\alpha^{(1)}\left(\zeta_1^{(1)} - \overline{\eta}_1^{(1)}\right) - \eta_1^{(1)} c^2\alpha^{(1)}\right] c^2\beta^{(1)} = 0, \tag{42b}$$

$$\left[k_{sx}^{(1)} + \frac{N_1}{2} k_{sn}^{(1)} - \omega_i^2 m_s^{(1)}\right] x_s^{(1)} + \frac{N_1}{2} k_{sn}^{(1)}\left[\zeta_1^{(1)} s^2\alpha^{(1)} + s\alpha^{(1)} c\alpha^{(1)}\left(\overline{\zeta}_1^{(1)} + \eta_1^{(1)}\right) + \overline{\eta}_1^{(1)} c^2\alpha^{(1)}\right] c^2\beta^{(1)} = 0, \tag{43a}$$

$$\left[k_{sy}^{(1)} + \frac{N_1}{2} k_{sn}^{(1)} - \omega_i^2 m_s^{(1)}\right] y_s^{(1)} - \frac{N_1}{2} k_{sn}^{(1)}\left[\overline{\zeta}_1^{(1)} s^2\alpha^{(1)} + s\alpha^{(1)} c\alpha^{(1)}\left(\zeta_1^{(1)} + \overline{\eta}_1^{(1)}\right) + \eta_1^{(1)} c^2\alpha^{(1)}\right] c^2\beta^{(1)} = 0. \tag{43b}$$

Inserting $\phi_i^{(1)}$ and $\overline{\phi}_i^{(1)}$ into (24d), we get

$$\mathbf{L}_\mathbf{n}^{(1)} = \left[\mathbf{K}_{\mathbf{c2}}^{(1)n}\right]^\mathbf{T} \mathbf{p}_c^{(1)} - \left[\mathbf{K}_{\mathbf{r2}}^{(1)n}\right]^\mathbf{T} \mathbf{p}_r^{(1)} + \left[\mathbf{K}_{\mathbf{s2}}^{(1)n}\right]^\mathbf{T} \mathbf{p}_s^{(1)} + \left[\mathbf{K}_{\mathbf{pp}}^{(1)} - \omega_i^2 \mathbf{M}_p^{(1)}\right] \mathbf{p}_n^{(1)} = \mathbf{0}, \tag{44a}$$

$$\overline{\mathbf{L}}_\mathbf{n}^{(1)} = \left[\mathbf{K}_{\mathbf{c2}}^{(1)n}\right]^\mathbf{T} \overline{\mathbf{p}}_c^{(1)} - \left[\mathbf{K}_{\mathbf{r2}}^{(1)n}\right]^\mathbf{T} \overline{\mathbf{p}}_r^{(1)} + \left[\mathbf{K}_{\mathbf{s2}}^{(1)n}\right]^\mathbf{T} \overline{\mathbf{p}}_s^{(1)} + \left[\mathbf{K}_{\mathbf{pp}}^{(1)} - \omega_i^2 \mathbf{M}_p^{(1)}\right] \overline{\mathbf{p}}_n^{(1)} = \mathbf{0}, \tag{44b}$$

where $\mathbf{L}_\mathbf{n}^{(1)}$ and $\overline{\mathbf{L}}_\mathbf{n}^{(1)}$ are the introduced notations. Applying the mode characteristics of the radical translational modes (b) and (c), the above equations can be expressed as

$$\mathbf{L}_\mathbf{n}^{(1)} = \mathbf{L}_1^{(1)} \cos\psi_n^{(1)} + \overline{\mathbf{L}}_1^{(1)} \sin\psi_n^{(1)}, \tag{45a}$$

$$\overline{\mathbf{L}}_\mathbf{n}^{(1)} = -\mathbf{L}_1^{(1)} \sin\psi_n^{(1)} + \overline{\mathbf{L}}_1^{(1)} \cos\psi_n^{(1)}. \tag{45b}$$

The eigenvalue problems of the 1st stage can be reduced to fourteen independent equations: six equations from (41a)–(43b) and eight equations from (45a) and (45b). Thus, seven natural frequencies with multiplicity two are obtained. The reduced eigenvector of the 1st stage can be expressed as $[x_c^{(1)}, y_c^{(1)}, x_r^{(1)}, y_r^{(1)}, x_s^{(1)}, y_s^{(1)}, \xi_1^{(1)}, \eta_1^{(1)}, \upsilon_1^{(1)}, u_1^{(1)}, \overline{\xi}_1^{(1)}, \overline{\eta}_1^{(1)}, \overline{\upsilon}_1^{(1)}, \overline{u}_1^{(1)}]^T$. With similar operations on the eigenvalue matrix equations (24a), (24b), (24c), and (24d), seven natural frequencies with multiplicity two also can be derived from the reduced-order eigenvalue problems of the 2nd stage and the reduced eigenvector of the 2nd stage can be simplified as $[x_c^{(2)}, y_c^{(2)}, x_r^{(2)}, y_r^{(2)}, x_s^{(2)}, y_s^{(2)}, \xi_1^{(2)}, \eta_1^{(2)}, \upsilon_1^{(2)}, u_1^{(2)}, \overline{\xi}_1^{(2)}, \overline{\eta}_1^{(2)}, \overline{\upsilon}_1^{(2)}, \overline{u}_1^{(2)}]^T$. To sum up, there are always fourteen natural frequencies with multiplicity 2 for the two-stage HPGs, and the corresponding vibration modes are the radical translational modes.

4.3. Planet Mode. The planet mode is composed of the 1st-stage planet mode and the 2nd-stage planet mode. Taking the 1st-stage planet mode as an example, we analytically investigate the unique characteristics of the planet mode.

The typical characteristics of the 1st-stage planet mode are

(a) The natural mode multiplicity of the 1st-stage planet mode is $m = \mathbf{N}_1 - 3$.

(b) The modal deflections of central members in both stages and planets in the 2nd stage are zero. Thus, the displacement subvectors can be written as

$$\mathbf{p}_j^{(i)} = \left[x_j^{(i)}, y_j^{(i)}, z_j^{(i)}, u_j^{(i)}\right]^T = [0,0,0,0]^T, \quad (j = c, r, s;\ i = 1, 2)$$
$$\mathbf{p}_n^{(2)} = \left[\xi_n^{(2)}, \eta_n^{(2)}, \upsilon_n^{(2)}, u_n^{(2)}\right]^T = [0,0,0,0]^T, \quad (n = 1, 2, \ldots, N_2). \tag{46}$$

(c) Only planets in the 1st stage have motions. The deflections of diametrically opposed planets are identical. Besides, the motions of each planet are a scalar multiple of the motions of an arbitrarily selected first planet. The displacement subvector of planet in the 1st stage is given by

$$\mathbf{p}_n^{(1)} = \left[\xi_n^{(1)}, \eta_n^{(1)}, \upsilon_n^{(1)}, u_n^{(1)}\right]^T = w_n^{(1)} \mathbf{p}_1^{(1)} = w_n^{(1)}\left[\xi_1^{(1)}, \eta_1^{(1)}, \upsilon_1^{(1)}, u_1^{(1)}\right]^T \quad (n = 1, \ldots, N_1), \tag{47}$$

where $w_n^{(1)}$ are constants and $w_1^{(1)} = 1$.

The eigenvectors of the 1st stage can be expressed as

$$\phi_i^{(1)} = \left[\mathbf{0}, \mathbf{0}, \mathbf{0}, \mathbf{p}_1^{(1)}, \ldots, w_n^{(1)}\mathbf{p}_1^{(1)}\right]^T, \tag{48}$$

where the zero vectors are 4×1.

Substituting (46)-(47) into (23a), (23b), (23c), and (23d) gives

$$k_p^{(1)} \sum_{n=1}^{N_1} w_n^{(1)} \begin{bmatrix} \xi_1^{(1)} \cos\psi_n^{(1)} - \eta_1^{(1)} \sin\psi_n^{(1)} \\ \xi_1^{(1)} \sin\psi_n^{(1)} + \eta_1^{(1)} \cos\psi_n^{(1)} \\ \dfrac{v_1^{(1)} k_{pz}^{(1)}}{k_p^{(1)}} \\ \eta_1^{(1)} \end{bmatrix} = \mathbf{0}, \tag{49}$$

$$k_{rp}^{(1)} \left(\xi_1^{(1)} \sin\alpha^{(1)} + \eta_1^{(1)} \cos\alpha^{(1)} + v_1^{(1)} + u_1^{(1)}\right) \cdot \sum_{n=1}^{N_1} w_n^{(1)} \begin{bmatrix} \cos^2\beta^{(1)} \sin\psi_{rn}^{(1)} \\ -\cos^2\beta^{(1)} \cos\psi_{rn}^{(1)} \\ \sin\beta^{(1)} \cos\beta^{(1)} \\ -\cos^2\beta^{(1)} \end{bmatrix} = \mathbf{0}, \tag{50}$$

$$k_{sp}^{(1)} \left(\xi_1^{(1)} \sin\alpha + \eta_1^{(1)} \cos\alpha + v_1^{(1)} + u_1^{(1)}\right) \cdot \sum_{n=1}^{N_1} w_n^{(1)} \begin{bmatrix} \cos^2\beta^{(1)} \sin\psi_{sn}^{(1)} \\ -\cos^2\beta^{(1)} \cos\psi_{sn}^{(1)} \\ -\sin\beta^{(1)} \cos\beta^{(1)} \\ -\cos^2\beta^{(1)} \end{bmatrix} = \mathbf{0} \tag{51}$$

$$\left(\mathbf{K}_{pp}^{(1)} - \omega_i^2 \mathbf{M}_p^{(1)}\right) w_n^{(1)} \mathbf{p}_1^{(1)} = \mathbf{0}. \tag{52}$$

To satisfy (49)–(51), three independent constraint equations can be obtained.

$$\begin{aligned} \sum_{n=1}^{N_1} w_n^{(1)} &= 0, \\ \sum_{n=1}^{N_1} w_n^{(1)} \cos\psi_n^{(1)} &= 0, \\ \sum_{n=1}^{N_1} w_n^{(1)} \sin\psi_n^{(1)} &= 0. \end{aligned} \tag{53}$$

It is obvious that there is no solution if $\mathbf{N}_1 < 3$. Four natural frequencies are calculated from (52). According to (48), $\mathbf{N}_1 - 3$ independent solutions can be deduced with $w_n^{(1)}$ determined from (53) only if $\mathbf{N}_1 > 3$.

Similarly, in the 2nd-stage planet modes, only planets in stage two have modal deflections. Without loss of generality, we also analytically investigate the reduced-order eigenvalue problems of the 2nd-stage planet modes. With similar operations on the eigenvalue matrix equations of the 2nd-stage members, it is concluded that four natural frequencies with a multiplicity of $\mathbf{N}_2 - 3$ are always obtained and the associated vibration modes are the 2nd-stage planet mode.

5. Conclusions

In this study, a three-dimensional dynamic model of the two-stage HPGs with consideration of axial and radical deformations is established. Two three-dimensional coordinate systems are created to analyze the relative displacements of members. Dynamic equations of motion which can be used to analyze HPGs with variant number of planets in two stages, different planet phasing, and spacing configurations are derived by Newton's second law and the Theorem of Moment of Momentum. Subsequently, the natural frequencies and vibration modes of the two-stage HPGs with equally spaced planets are simulated numerically. Finally, the unique properties of these vibration modes are mathematically proved. The main properties of the two-stage HPGs are summarized below:

(1) Vibration modes of the two-stage HPGs can be categorized as five classes: the rigid body mode, the axial translational-rotational mode, the radical translational mode, and the 1st-stage and the 2nd-stage planet mode.

(2) Axial translational-rotational modes: twenty natural frequencies always have multiplicity $m = 1$ for various $\mathbf{N}_1$ and $\mathbf{N}_2$. The associated mode is the axial translational-rotational mode. All central members only rotate and translate axially in this vibration mode. Deflections of planets in the same stage are identical.

(3) Radical translational modes: there are always fourteen pairs of natural frequencies with multiplicity $m = 2$ for different $\mathbf{N}_1$ and $\mathbf{N}_2$, and the corresponding vibration mode is the radical translational mode. In this mode, all central members have pure radical translations.

(4) Planet modes: the planet modes of the two-stage HPGs are composed of two types, the 1st-stage planet mode and the 2nd-stage planet mode. Four natural frequencies with multiplicity $m = N_i - 3$ are calculated only if $N_i > 3$. The associated vibration modes are the ith stage planet mode in which only planets in the ith stage have motions while other members remain stationary.

(5) The natural frequency with multiplicity $m = 1, 2$ varies monotonically as additional planets in both stages are introduced.

Appendix

$$\mathbf{M} = \begin{bmatrix} \mathbf{M}^{(1)} & \mathbf{0} \\ \mathbf{0} & \mathbf{M}^{(2)} \end{bmatrix}$$

$$\mathbf{M}^{(1)} = \operatorname{diag}\left(\mathbf{M}_c^{(1)}, \mathbf{M}_r^{(1)}, \mathbf{M}_s^{(1)}, \underbrace{\mathbf{M}_P^{(1)}, \ldots, \mathbf{M}_P^{(1)}}_{N_1}\right),$$

$$\mathbf{M}^{(2)} = \operatorname{diag}\left(\mathbf{M}_c^{(2)}, \mathbf{M}_r^{(2)}, \mathbf{M}_s^{(2)}, \underbrace{\mathbf{M}_P^{(2)}, \ldots, \mathbf{M}_P^{(2)}}_{N_2}\right)$$

$$\mathbf{M}_j^{(i)} = \operatorname{diag}\left(m_j^{(i)}, m_j^{(i)}, m_j^{(i)}, \frac{I_j^{(i)}}{r_j^{(i)2}}\right), \quad j = c, r, s, p;\ i = 1, 2;$$

$$\mathbf{G} = \operatorname{diag}\left(\underbrace{\mathbf{G}_c^{(1)}, \mathbf{G}_r^{(1)}, \mathbf{G}_s^{(1)}, \mathbf{G}_1^{(1)}, \ldots, \mathbf{G}_{N_1}^{(1)}}_{\text{stage 1}} \mid \underbrace{\mathbf{G}_c^{(2)}, \mathbf{G}_r^{(2)}, \mathbf{G}_s^{(2)}, \mathbf{G}_1^{(2)}, \ldots, \mathbf{G}_{N_2}^{(2)}}_{\text{stage 2}}\right)$$

$$\mathbf{G}_j^{(i)} = \begin{bmatrix} 0 & -2m_j^{(i)} & 0 & 0 \\ 2m_j^{(i)} & 0 & 0 & 0 \\ 0 & 0 & 0 & 0 \\ 0 & 0 & 0 & 0 \end{bmatrix}, \quad j = c, r, s, 1, \ldots, N_i;\ i = 1, 2$$

$$\boldsymbol{\omega}_{\mathbf{c}} = \operatorname{diag}\left(\underbrace{\omega_c^{(1)}, \ldots, \omega_c^{(1)}}_{12+4N_1} \mid \underbrace{\omega_c^{(2)}, \ldots, \omega_c^{(2)}}_{12+4N_2}\right)$$

$$\mathbf{K}_{\boldsymbol{\Omega}} = \operatorname{diag}\left(\overbrace{\underbrace{m_c^{(1)}, m_c^{(1)}, 0, 0}_{c}, \underbrace{m_r^{(1)}, m_r^{(1)}, 0, 0}_{r}, \underbrace{m_s^{(1)}, m_s^{(1)}, 0, 0}_{s}, \underbrace{m_p^{(1)}, m_p^{(1)}, 0, 0, \ldots, m_p^{(1)}, m_p^{(1)}, 0, 0}_{4N_1}}^{\text{stage 1}}, \overbrace{\underbrace{m_c^{(2)}, m_c^{(2)}, 0, 0}_{c}, \underbrace{m_r^{(2)}, m_r^{(2)}, 0, 0}_{r}, \underbrace{m_s^{(2)}, m_s^{(2)}, 0, 0}_{s}, \underbrace{m_p^{(2)}, m_p^{(2)}, 0, 0, \ldots, m_p^{(2)}, m_p^{(2)}, 0, 0}_{4N_2}}^{\text{stage 2}}\right)$$

$$\mathbf{K}_{\mathbf{b}} = \operatorname{diag}\left(\mathbf{K}_{\mathbf{b}}^{(1)}, \mathbf{K}_{\mathbf{b}}^{(2)}\right)$$

$$\mathbf{K}_{\mathbf{b}}^{(1)} = \mathbf{K}_{\mathbf{b}\text{-indep}}^{(1)} + \mathbf{K}_{\mathbf{cb}\text{-dep}}^{(1)},$$

$$\mathbf{K}_{\mathbf{b}}^{(2)} = \mathbf{K}_{\mathbf{b}\text{-indep}}^{(2)} + \mathbf{K}_{\mathbf{cb}\text{-dep}}^{(2)}$$

$$\mathbf{K}_{\mathbf{b}\text{-indep}}^{(1)} = \operatorname{diag}\left(\mathbf{K}_{\mathbf{cb}}^{(\mathbf{1})}, \mathbf{K}_{\mathbf{rb}}^{(\mathbf{1})}, \mathbf{K}_{\mathbf{sb}}^{(\mathbf{1})}, \underbrace{\mathbf{0}, \ldots, \mathbf{0}}_{N_1}\right),$$

$$\mathbf{K}_{\mathbf{cb}\text{-dep}}^{(1)} = \operatorname{diag}\left(\mathbf{K}_{\mathbf{cs}}^{(\mathbf{1})\mathbf{c}}, \mathbf{K}_{\mathbf{r}}^{(\mathbf{1})\mathbf{r}}, \mathbf{0}, \underbrace{\mathbf{0}, \ldots, \mathbf{0}}_{N_1}\right)$$

$$\mathbf{K}_{\mathbf{b}\text{-indep}}^{(2)} = \operatorname{diag}\left(\mathbf{K}_{\mathbf{cb}}^{(\mathbf{2})}, \mathbf{K}_{\mathbf{rb}}^{(\mathbf{2})}, \mathbf{K}_{\mathbf{sb}}^{(\mathbf{2})}, \underbrace{\mathbf{0}, \ldots, \mathbf{0}}_{N_2}\right)$$

$$\mathbf{K}_{\mathbf{cb}\text{-dep}}^{(2)} = \operatorname{diag}\left(\mathbf{0}, \mathbf{K}_{\mathbf{r}}^{(2)\mathbf{r}}, \mathbf{K}_{\mathbf{cs}}^{(2)s}, \underbrace{\mathbf{0}, \ldots, \mathbf{0}}_{N_2}\right)$$

$$\mathbf{K}_{j\mathbf{b}}^{(i)} = \operatorname{diag}\left(k_{jx}^{(i)}, k_{jy}^{(i)}, k_{jz}^{(i)}, k_{ju}^{(i)}\right), \quad j = c, r, s;\ i = 1, 2;$$

$$\mathbf{K}_{\mathbf{r}}^{(\mathbf{1})\mathbf{r}}=\operatorname{diag}\left(k_{rx}^{(1,2)},k_{ry}^{(1,2)},k_{rz}^{(1,2)},k_{ru}^{(1,2)}\right);$$

$$\mathbf{K}_{\mathbf{cs}}^{(\mathbf{1})\mathbf{c}}=\operatorname{diag}\left(k_{csx}^{(1,2)},k_{csy}^{(1,2)},k_{csz}^{(1,2)},k_{csu}^{(1,2)}\right)$$

$$\mathbf{K}_{\mathbf{r}}^{(\mathbf{2})\mathbf{r}}=\operatorname{diag}\left(k_{rx}^{(1,2)},k_{ry}^{(1,2)},k_{rz}^{(1,2)},k_{ru}^{(1,2)}\right);$$

$$\mathbf{K}_{\mathbf{cs}}^{(\mathbf{2})\mathbf{s}}=\operatorname{diag}\left(k_{csx}^{(1,2)},k_{csy}^{(1,2)},k_{csz}^{(1,2)},k_{csu}^{(1,2)}\right)$$

$$\mathbf{T}(t)=\left[0,0,0,\frac{T_c^{(1)}(t)}{r_c^{(1)}},0,0,0,\frac{T_r^{(1)}(t)}{r_r^{(1)}},0,0,0,\frac{T_s^{(1)}(t)}{r_s^{(1)}},\overbrace{0,\ldots,0}^{4N_1},\mid 0,0,0,\frac{T_c^{(2)}(t)}{r_c^{(2)}},0,0,0,\frac{T_r^{(2)}(t)}{r_r^{(2)}},0,0,0,\frac{T_s^{(2)}(t)}{r_s^{(2)}},\overbrace{0,\ldots,0}^{4N_2}\right]^T$$

$$\mathbf{K}_{\mathbf{m}}=\left[\begin{array}{c|c}\mathbf{K}_{\mathbf{m}}^{(\mathbf{1})} & \mathbf{K}_{\mathbf{m}}^{\mathbf{2s}}\\ \hline \mathbf{K}_{\mathbf{m}}^{\mathbf{1c}} & \mathbf{K}_{\mathbf{m}}^{(2)}\end{array}\right]$$

$$\mathbf{K}_{\mathbf{m}}^{(\mathbf{1})}=\begin{bmatrix}\sum_{n=1}^{N_1}\mathbf{K}_{c1}^{(1)n} & \mathbf{0} & \mathbf{0} & \mathbf{K}_{\mathbf{c2}}^{(\mathbf{1})\mathbf{1}} & \mathbf{K}_{\mathbf{c2}}^{(\mathbf{1})2} & \mathbf{K}_{\mathbf{c2}}^{(\mathbf{1})3}\\ & \sum_{n=1}^{N_1}\mathbf{K}_{r1}^{(1)n} & \mathbf{0} & \mathbf{K}_{r\mathbf{2}}^{(\mathbf{1})\mathbf{1}} & \mathbf{K}_{r\mathbf{2}}^{(\mathbf{1})2} & \mathbf{K}_{r\mathbf{2}}^{(\mathbf{1})3}\\ & & \sum_{n=1}^{N_1}\mathbf{K}_{s1}^{(1)n} & \mathbf{K}_{s\mathbf{2}}^{(\mathbf{1})\mathbf{1}} & \mathbf{K}_{s\mathbf{2}}^{(\mathbf{1})2} & \mathbf{K}_{s\mathbf{2}}^{(\mathbf{1})3}\\ & & & \mathbf{K}_{pp}^{(\mathbf{1})\mathbf{1}} & \mathbf{0} & \mathbf{0}\\ & \text{symm} & & & \mathbf{K}_{pp}^{(\mathbf{1})2} & \mathbf{0}\\ & & & & & \mathbf{K}_{pp}^{(\mathbf{1})3}\end{bmatrix}$$

$$\mathbf{K}_{\mathbf{m}}^{\mathbf{2s}}=\left[\begin{array}{ccc|ccc}&&-\mathbf{K}_{\mathbf{cs}}^{(\mathbf{2})\mathbf{s}} & \mathbf{0} & & \\ & -\mathbf{K}_{\mathbf{r}}^{(\mathbf{2})\mathbf{r}} & & & \mathbf{0} & \\ \mathbf{0} & & & & & \mathbf{0}\\ \hline \mathbf{0} & & & \mathbf{0} & & \\ & \mathbf{0} & & & \mathbf{0} & \\ & & \mathbf{0} & & & \mathbf{0}\end{array}\right]$$

$$\mathbf{K}_{\mathbf{m}}^{(2)}=\begin{bmatrix}\sum_{n=1}^{N_1}\mathbf{K}_{c1}^{(2)n} & \mathbf{0} & \mathbf{0} & \mathbf{K}_{\mathbf{c2}}^{(2)\mathbf{1}} & \mathbf{K}_{\mathbf{c2}}^{(2)2} & \mathbf{K}_{\mathbf{c2}}^{(2)3}\\ & \sum_{n=1}^{N_1}\mathbf{K}_{r1}^{(2)n} & \mathbf{0} & \mathbf{K}_{r\mathbf{2}}^{(2)\mathbf{1}} & \mathbf{K}_{r\mathbf{2}}^{(2)2} & \mathbf{K}_{r\mathbf{2}}^{(2)3}\\ & & \sum_{n=1}^{N_1}\mathbf{K}_{s1}^{(2)n} & \mathbf{K}_{s\mathbf{2}}^{(2)\mathbf{1}} & \mathbf{K}_{s\mathbf{2}}^{(2)2} & \mathbf{K}_{s\mathbf{2}}^{(2)3}\\ & & & \mathbf{K}_{pp}^{(2)\mathbf{1}} & \mathbf{0} & \mathbf{0}\\ & \text{symm} & & & \mathbf{K}_{pp}^{(2)2} & \mathbf{0}\\ & & & & & \mathbf{K}_{pp}^{(2)3}\end{bmatrix}$$

$$\mathbf{K}_{\mathbf{m}}^{\mathbf{1c}}=\left[\begin{array}{ccc|ccc}&&\mathbf{0} & \mathbf{0} & & \\ & -\mathbf{K}_{\mathbf{r}}^{(1)\mathbf{r}} & & & \mathbf{0} & \\ -\mathbf{K}_{\mathbf{cs}}^{(1)c} & & & & & \mathbf{0}\\ \hline \mathbf{0} & & & \mathbf{0} & & \\ & \mathbf{0} & & & \mathbf{0} & \\ & & \mathbf{0} & & & \mathbf{0}\end{array}\right]$$

$$\mathbf{K}_{pp}^{(1)n}=\mathbf{K}_{c3}^{(1)n}+\mathbf{K}_{r3}^{(1)n}+\mathbf{K}_{s3}^{(1)n},$$

$$\mathbf{K}_{pp}^{(2)n} = \mathbf{K}_{c3}^{(2)n} + \mathbf{K}_{r3}^{(2)n} + \mathbf{K}_{s3}^{(2)n}$$

$$\mathbf{k}_{\mathbf{c1}}^{(\mathbf{1})\mathbf{n}} = k_p^{(1)} \begin{bmatrix} 1 & 0 & 0 & -\mathrm{s}\psi_n^{(1)} \\ 0 & 1 & 0 & \mathrm{c}\psi_n^{(1)} \\ 0 & 0 & \dfrac{k_{pz}^{(1)}}{k_p^{(1)}} & 0 \\ -\mathrm{s}\psi_n^{(1)} & \mathrm{c}\psi_n^{(1)} & 0 & 1 \end{bmatrix}$$

$$\mathbf{k}_{\mathbf{c2}}^{(1)\mathbf{n}} = k_p^{(1)} \begin{bmatrix} -\mathrm{c}\psi_n^{(1)} & \mathrm{s}\psi_n^{(1)} & 0 & 0 \\ -\mathrm{s}\psi_n^{(1)} & -\mathrm{c}\psi_n^{(1)} & 0 & 0 \\ 0 & 0 & \dfrac{-k_{pz}^{(1)}}{k_p^{(1)}} & 0 \\ 0 & -1 & 0 & 0 \end{bmatrix}$$

$$\mathbf{k}_{\mathbf{r1}}^{(1)\mathbf{n}} = k_{rn}^{(1)} \begin{bmatrix} \mathrm{c}^2\beta^{(1)}\mathrm{s}^2\psi_{rn}^{(1)} & -\mathrm{c}^2\beta^{(1)}\mathrm{c}\psi_{rn}^{(1)}\mathrm{s}\psi_{rn}^{(1)} & \mathrm{s}\beta^{(1)}\mathrm{c}\beta^{(1)}\mathrm{s}\psi_{rn}^{(1)} & -\mathrm{c}^2\beta^{(1)}\mathrm{s}\psi_{rn}^{(1)} \\ -\mathrm{c}^2\beta^{(1)}\mathrm{c}\psi_{rn}^{(1)}\mathrm{s}\psi_{rn}^{(1)} & \mathrm{c}^2\beta^{(1)}\mathrm{c}^2\psi_{rn}^{(1)} & -\mathrm{s}\beta^{(1)}\mathrm{c}\beta^{(1)}\mathrm{c}\psi_{rn}^{(1)} & \mathrm{c}^2\beta^{(1)}\mathrm{c}\psi_{rn}^{(1)} \\ \mathrm{s}\beta^{(1)}\mathrm{c}\beta^{(1)}\mathrm{s}\psi_{rn}^{(1)} & -\mathrm{s}\beta^{(1)}\mathrm{c}\beta^{(1)}\mathrm{c}\psi_{rn}^{(1)} & \mathrm{s}^2\beta^{(1)} & -\mathrm{s}\beta^{(1)}\mathrm{c}\beta^{(1)} \\ -\mathrm{c}^2\beta^{(1)}\mathrm{s}\psi_{rn}^{(1)} & \mathrm{c}^2\beta^{(1)}\mathrm{c}\psi_{rn}^{(1)} & -\mathrm{s}\beta^{(1)}\mathrm{c}\beta^{(1)} & \mathrm{c}^2\beta^{(1)} \end{bmatrix}$$

$$\mathbf{k}_{\mathbf{r2}}^{(1)\mathbf{n}} = k_{rn}^{(1)} \begin{bmatrix} -\mathrm{c}^2\beta^{(1)}\mathrm{s}\alpha^{(1)}\mathrm{s}\psi_{rn}^{(1)} & \mathrm{c}^2\beta^{(1)}\mathrm{c}\alpha^{(1)}\mathrm{s}\psi_{rn}^{(1)} & -\mathrm{s}\beta^{(1)}\mathrm{c}\beta^{(1)}\mathrm{s}\psi_{rn}^{(1)} & \mathrm{c}^2\beta^{(1)}\mathrm{s}\psi_{rn}^{(1)} \\ \mathrm{c}^2\beta^{(1)}\mathrm{s}\alpha^{(1)}\mathrm{c}\psi_{rn}^{(1)} & -\mathrm{c}^2\beta^{(1)}\mathrm{c}\alpha^{(1)}\mathrm{c}\psi_{rn}^{(1)} & \mathrm{s}\beta^{(1)}\mathrm{c}\beta^{(1)}\mathrm{c}\psi_{rn}^{(1)} & -\mathrm{c}^2\beta^{(1)}\mathrm{c}\psi_{rn}^{(1)} \\ -\mathrm{s}\beta^{(1)}\mathrm{c}\beta^{(1)}\mathrm{s}\alpha^{(1)} & \mathrm{s}\beta^{(1)}\mathrm{c}\beta^{(1)}\mathrm{c}\alpha^{(1)} & -\mathrm{s}^2\beta^{(1)} & \mathrm{s}\beta^{(1)}\mathrm{c}\beta^{(1)} \\ \mathrm{c}^2\beta^{(1)}\mathrm{s}\alpha^{(1)} & -\mathrm{c}^2\beta^{(1)}\mathrm{c}\alpha^{(1)} & \mathrm{s}\beta^{(1)}\mathrm{c}\beta^{(1)} & -\mathrm{c}^2\beta^{(1)} \end{bmatrix}$$

$$\mathbf{k}_{\mathbf{s1}}^{(1)\mathbf{n}} = k_{sn}^{(1)} \begin{bmatrix} \mathrm{c}^2\beta^{(1)}\mathrm{s}^2\psi_{sn}^{(1)} & -\mathrm{c}^2\beta^{(1)}\mathrm{c}\psi_{sn}^{(1)}\mathrm{s}\psi_{sn}^{(1)} & -\mathrm{s}\beta^{(1)}\mathrm{c}\beta^{(1)}\mathrm{s}\psi_{sn}^{(1)} & -\mathrm{c}^2\beta^{(1)}\mathrm{s}\psi_{sn}^{(1)} \\ -\mathrm{c}^2\beta^{(1)}\mathrm{c}\psi_{sn}^{(1)}\mathrm{s}\psi_{sn}^{(1)} & \mathrm{c}^2\beta^{(1)}\mathrm{c}^2\psi_{sn}^{(1)} & \mathrm{s}\beta^{(1)}\mathrm{c}\beta^{(1)}\mathrm{c}\psi_{sn}^{(1)} & \mathrm{c}^2\beta^{(1)}\mathrm{c}\psi_{sn}^{(1)} \\ -\mathrm{s}\beta^{(1)}\mathrm{c}\beta^{(1)}\mathrm{s}\psi_{sn}^{(1)} & \mathrm{s}\beta^{(1)}\mathrm{c}\beta^{(1)}\mathrm{c}\psi_{sn}^{(1)} & \mathrm{s}^2\beta^{(1)} & \mathrm{s}\beta^{(1)}\mathrm{c}\beta^{(1)} \\ -\mathrm{c}^2\beta^{(1)}\mathrm{s}\psi_{sn}^{(1)} & \mathrm{c}^2\beta^{(1)}\mathrm{c}\psi_{sn}^{(1)} & \mathrm{s}\beta^{(1)}\mathrm{c}\beta^{(1)} & \mathrm{c}^2\beta^{(1)} \end{bmatrix}$$

$$\mathbf{k}_{\mathbf{s2}}^{(1)\mathbf{n}} = k_{sn}^{(1)} \begin{bmatrix} \mathrm{c}^2\beta^{(1)}\mathrm{s}\alpha^{(1)}\mathrm{s}\psi_{sn}^{(1)} & \mathrm{c}^2\beta^{(1)}\mathrm{c}\alpha^{(1)}\mathrm{s}\psi_{sn}^{(1)} & \mathrm{s}\beta^{(1)}\mathrm{c}\beta^{(1)}\mathrm{s}\psi_{sn}^{(1)} & -\mathrm{c}^2\beta^{(1)}\mathrm{s}\psi_{sn}^{(1)} \\ -\mathrm{c}^2\beta^{(1)}\mathrm{s}\alpha^{(1)}\mathrm{c}\psi_{sn}^{(1)} & -\mathrm{c}^2\beta^{(1)}\mathrm{c}\alpha^{(1)}\mathrm{c}\psi_{sn}^{(1)} & -\mathrm{s}\beta^{(1)}\mathrm{c}\beta^{(1)}\mathrm{c}\psi_{sn}^{(1)} & \mathrm{c}^2\beta^{(1)}\mathrm{c}\psi_{sn}^{(1)} \\ -\mathrm{s}\beta^{(1)}\mathrm{c}\beta^{(1)}\mathrm{s}\alpha^{(1)} & -\mathrm{s}\beta^{(1)}\mathrm{c}\beta^{(1)}\mathrm{c}\alpha^{(1)} & -\mathrm{s}^2\beta^{(1)} & \mathrm{s}\beta^{(1)}\mathrm{c}\beta^{(1)} \\ -\mathrm{c}^2\beta^{(1)}\mathrm{s}\alpha^{(1)} & -\mathrm{c}^2\beta^{(1)}\mathrm{c}\alpha^{(1)} & -\mathrm{s}\beta^{(1)}\mathrm{c}\beta^{(1)} & \mathrm{c}^2\beta^{(1)} \end{bmatrix}$$

$$\mathbf{k}_{\mathbf{c3}}^{(1)\mathbf{n}} = \mathrm{diag}\left(k_{px}^{(1)}, k_{py}^{(1)}, k_{pz}^{(1)}, 0\right)$$

$$\mathbf{k}_{\mathbf{s3}}^{(1)\mathbf{n}} = k_{sn}^{(1)} \begin{bmatrix} \mathrm{c}^2\beta^{(1)}\mathrm{s}^2\alpha^{(1)} & \mathrm{c}^2\beta^{(1)}\mathrm{c}\alpha^{(1)}\mathrm{s}\alpha^{(1)} & \mathrm{s}\beta^{(1)}\mathrm{c}\beta^{(1)}\mathrm{s}\alpha^{(1)} & -\mathrm{c}^2\beta^{(1)}\mathrm{s}^2\alpha^{(1)} \\ \mathrm{c}\alpha^{(1)}\mathrm{s}\alpha^{(1)} & \mathrm{c}^2\alpha^{(1)} & \mathrm{s}\beta^{(1)}\mathrm{c}\beta^{(1)}\mathrm{c}\alpha^{(1)} & -\mathrm{c}^2\beta^{(1)}\mathrm{c}\alpha^{(1)} \\ \mathrm{s}\beta^{(1)}\mathrm{c}\beta^{(1)}\mathrm{s}\alpha^{(1)} & \mathrm{s}\beta^{(1)}\mathrm{c}\beta^{(1)}\mathrm{c}\alpha^{(1)} & \mathrm{s}^2\beta^{(1)} & -\mathrm{s}\beta^{(1)}\mathrm{c}\beta^{(1)} \\ -\mathrm{c}^2\beta^{(1)}\mathrm{s}\alpha^{(1)} & -\mathrm{c}^2\beta^{(1)}\mathrm{c}\alpha^{(1)} & -\mathrm{s}\beta^{(1)}\mathrm{c}\beta^{(1)} & \mathrm{c}^2\beta^{(1)} \end{bmatrix}$$

$$\mathbf{k}_{\mathbf{r3}}^{(1)\mathbf{n}} = k_{rn}^{(1)} \begin{bmatrix} \mathrm{c}^2\beta^{(1)}\mathrm{s}^2\alpha^{(1)} & -\mathrm{c}^2\beta^{(1)}\mathrm{c}\alpha^{(1)}\mathrm{s}\alpha^{(1)} & \mathrm{s}\beta^{(1)}\mathrm{c}\beta^{(1)}\mathrm{s}\alpha^{(1)} & -\mathrm{c}^2\beta^{(1)}\mathrm{s}\alpha^{(1)} \\ -\mathrm{c}^2\beta^{(1)}\mathrm{c}\alpha^{(1)}\mathrm{s}\alpha^{(1)} & \mathrm{c}^2\beta^{(1)}\mathrm{c}^2\alpha^{(1)} & -\mathrm{s}\beta^{(1)}\mathrm{c}\beta^{(1)}\mathrm{c}\alpha^{(1)} & \mathrm{c}^2\beta^{(1)}\mathrm{c}\alpha^{(1)} \\ \mathrm{s}\beta^{(1)}\mathrm{c}\beta^{(1)}\mathrm{s}\alpha^{(1)} & -\mathrm{s}\beta^{(1)}\mathrm{c}\beta^{(1)}\mathrm{c}\alpha^{(1)} & \mathrm{s}^2\beta^{(1)} & -\mathrm{s}\beta^{(1)}\mathrm{c}\beta^{(1)} \\ -\mathrm{c}^2\beta^{(1)}\mathrm{s}\alpha^{(1)} & \mathrm{c}^2\beta^{(1)}\mathrm{c}\alpha^{(1)} & -\mathrm{s}\beta^{(1)}\mathrm{c}\beta^{(1)} & \mathrm{c}^2\beta^{(1)} \end{bmatrix}$$

$$\mathbf{k}_{\mathbf{c1}}^{(2)\mathbf{n}} = k_p^{(2)} \begin{bmatrix} 1 & 0 & 0 & -\mathrm{s}\psi_n^{(2)} \\ 0 & 1 & 0 & \mathrm{c}\psi_n^{(2)} \\ 0 & 0 & \dfrac{k_{pz}^{(2)}}{k_p^{(2)}} & 0 \\ -\mathrm{s}\psi_n^{(2)} & \mathrm{c}\psi_n^{(2)} & 0 & 1 \end{bmatrix}$$

$$\mathbf{k}_{\mathbf{c2}}^{(2)\mathbf{n}} = k_p^{(2)} \begin{bmatrix} -\mathrm{c}\psi_n^{(2)} & \mathrm{s}\psi_n^{(2)} & 0 & 0 \\ -\mathrm{s}\psi_n^{(2)} & -\mathrm{c}\psi_n^{(2)} & 0 & 0 \\ 0 & 0 & \dfrac{-k_{pz}^{(2)}}{k_p^{(2)}} & 0 \\ 0 & -1 & 0 & 0 \end{bmatrix}$$

$$\mathbf{k}_{\mathbf{r1}}^{(2)\mathbf{n}} = k_{rn}^{(2)} \begin{bmatrix} \mathrm{c}^2\beta^{(2)}\mathrm{s}^2\psi_{rn}^{(2)} & -\mathrm{c}^2\beta^{(2)}\mathrm{c}\psi_{rn}^{(2)}\mathrm{s}\psi_{rn}^{(2)} & \mathrm{s}\beta^{(2)}\mathrm{c}\beta^{(2)}\mathrm{s}\psi_{rn}^{(2)} & -\mathrm{c}^2\beta^{(2)}\mathrm{s}\psi_{rn}^{(2)} \\ -\mathrm{c}^2\beta^{(2)}\mathrm{c}\psi_{rn}^{(2)}\mathrm{s}\psi_{rn}^{(2)} & \mathrm{c}^2\beta^{(2)}\mathrm{c}^2\psi_{rn}^{(2)} & -\mathrm{s}\beta^{(2)}\mathrm{c}\beta^{(2)}\mathrm{c}\psi_{rn}^{(2)} & \mathrm{c}^2\beta^{(2)}\mathrm{c}\psi_{rn}^{(2)} \\ \mathrm{s}\beta^{(2)}\mathrm{c}\beta^{(2)}\mathrm{s}\psi_{rn}^{(2)} & -\mathrm{s}\beta^{(2)}\mathrm{c}\beta^{(2)}\mathrm{c}\psi_{rn}^{(2)} & \mathrm{s}^2\beta^{(2)} & -\mathrm{s}\beta^{(2)}\mathrm{c}\beta^{(2)} \\ -\mathrm{c}^2\beta^{(2)}\mathrm{s}\psi_{rn}^{(2)} & \mathrm{c}^2\beta^{(2)}\mathrm{c}\psi_{rn}^{(2)} & -\mathrm{s}\beta^{(2)}\mathrm{c}\beta^{(2)} & \mathrm{c}^2\beta^{(2)} \end{bmatrix}$$

$$\mathbf{k}_{\mathbf{r2}}^{(2)\mathbf{n}} = k_{rn}^{(2)} \begin{bmatrix} -\mathrm{c}^2\beta^{(2)}\mathrm{s}\alpha^{(2)}\mathrm{s}\psi_{rn}^{(2)} & \mathrm{c}^2\beta^{(2)}\mathrm{c}\alpha^{(2)}\mathrm{s}\psi_{rn}^{(2)} & -\mathrm{s}\beta^{(2)}\mathrm{c}\beta^{(2)}\mathrm{s}\psi_{rn}^{(2)} & \mathrm{c}^2\beta^{(2)}\mathrm{s}\psi_{rn}^{(2)} \\ \mathrm{c}^2\beta^{(2)}\mathrm{s}\alpha^{(2)}\mathrm{c}\psi_{rn}^{(2)} & -\mathrm{c}^2\beta^{(2)}\mathrm{c}\alpha^{(2)}\mathrm{c}\psi_{rn}^{(2)} & \mathrm{s}\beta^{(2)}\mathrm{c}\beta^{(2)}\mathrm{c}\psi_{rn}^{(2)} & -\mathrm{c}^2\beta^{(2)}\mathrm{c}\psi_{rn}^{(2)} \\ -\mathrm{s}\beta^{(2)}\mathrm{c}\beta^{(2)}\mathrm{s}\alpha^{(2)} & \mathrm{s}\beta^{(2)}\mathrm{c}\beta^{(2)}\mathrm{c}\alpha^{(2)} & -\mathrm{s}\beta^{(2)} & \mathrm{s}\beta^{(2)}\mathrm{c}\beta^{(2)} \\ \mathrm{c}^2\beta^{(2)}\mathrm{s}\alpha^{(2)} & -\mathrm{c}^2\beta^{(2)}\mathrm{c}\alpha^{(2)} & \mathrm{s}\beta^{(2)}\mathrm{c}\beta^{(2)} & -\mathrm{c}^2\beta^{(2)} \end{bmatrix}$$

$$\mathbf{k}_{\mathbf{s1}}^{(2)\mathbf{n}} = k_{sn}^{(2)} \begin{bmatrix} \mathrm{c}^2\beta^{(2)}\mathrm{s}^2\psi_{sn}^{(2)} & -\mathrm{c}^2\beta^{(2)}\mathrm{c}\psi_{sn}^{(2)}\mathrm{s}\psi_{sn}^{(2)} & -\mathrm{s}\beta^{(2)}\mathrm{c}\beta^{(2)}\mathrm{s}\psi_{sn}^{(2)} & -\mathrm{c}^2\beta^{(2)}\mathrm{s}\psi_{sn}^{(2)} \\ -\mathrm{c}^2\beta^{(2)}\mathrm{c}\psi_{sn}^{(2)}\mathrm{s}\psi_{sn}^{(2)} & \mathrm{c}^2\beta^{(2)}\mathrm{c}^2\psi_{sn}^{(2)} & \mathrm{s}\beta^{(2)}\mathrm{c}\beta^{(2)}\mathrm{c}\psi_{sn}^{(2)} & \mathrm{c}^2\beta^{(2)}\mathrm{c}\psi_{sn}^{(2)} \\ -\mathrm{s}\beta^{(2)}\mathrm{c}\beta^{(2)}\mathrm{s}\psi_{sn}^{(2)} & \mathrm{s}\beta^{(2)}\mathrm{c}\beta^{(2)}\mathrm{c}\psi_{sn}^{(2)} & \mathrm{s}^2\beta^{(2)} & \mathrm{s}\beta^{(2)}\mathrm{c}\beta^{(2)} \\ -\mathrm{c}^2\beta^{(2)}\mathrm{s}\psi_{sn}^{(2)} & \mathrm{c}^2\beta^{(2)}\mathrm{c}\psi_{sn}^{(2)} & \mathrm{s}\beta^{(2)}\mathrm{c}\beta^{(2)} & \mathrm{c}^2\beta^{(2)} \end{bmatrix}$$

$$\mathbf{k}_{\mathbf{s2}}^{(2)\mathbf{n}} = k_{sn}^{(2)} \begin{bmatrix} \mathrm{c}^2\beta^{(2)}\mathrm{s}\alpha^{(2)}\mathrm{s}\psi_{sn}^{(2)} & \mathrm{c}^2\beta^{(2)}\mathrm{c}\alpha^{(2)}\mathrm{s}\psi_{sn}^{(2)} & \mathrm{s}\beta^{(2)}\mathrm{c}\beta^{(2)}\mathrm{s}\psi_{sn}^{(2)} & -\mathrm{c}^2\beta^{(2)}\mathrm{s}\psi_{sn}^{(2)} \\ -\mathrm{c}^2\beta^{(2)}\mathrm{s}\alpha^{(2)}\mathrm{c}\psi_{sn}^{(2)} & -\mathrm{c}^2\beta^{(2)}\mathrm{c}\alpha^{(2)}\mathrm{c}\psi_{sn}^{(2)} & -\mathrm{s}\beta^{(2)}\mathrm{c}\beta^{(2)}\mathrm{c}\psi_{sn}^{(2)} & \mathrm{c}^2\beta^{(2)}\mathrm{c}\psi_{sn}^{(2)} \\ -\mathrm{s}\beta^{(2)}\mathrm{c}\beta^{(2)}\mathrm{s}\alpha^{(2)} & -\mathrm{s}\beta^{(2)}\mathrm{c}\beta^{(2)}\mathrm{c}\alpha^{(2)} & -\mathrm{s}^2\beta^{(2)} & \mathrm{s}\beta^{(2)}\mathrm{c}\beta^{(2)} \\ -\mathrm{c}^2\beta^{(2)}\mathrm{s}\alpha^{(2)} & -\mathrm{c}^2\beta^{(2)}\mathrm{c}\alpha^{(2)} & -\mathrm{s}\beta^{(2)}\mathrm{c}\beta^{(2)} & \mathrm{c}^2\beta^{(2)} \end{bmatrix}$$

$$\mathbf{k}_{\mathbf{c3}}^{(2)\mathbf{n}} = \mathrm{diag}\left(k_{px}^{(2)}, k_{py}^{(2)}, k_{pz}^{(2)}, 0\right)$$

$$\mathbf{k}_{\mathbf{s3}}^{(2)\mathbf{n}} = k_{sn}^{(2)} \begin{bmatrix} \mathrm{c}^2\beta^{(2)}\mathrm{s}^2\alpha^{(2)} & \mathrm{c}^2\beta^{(2)}\mathrm{c}\alpha^{(2)}\mathrm{s}\alpha^{(2)} & \mathrm{s}\beta^{(2)}\mathrm{c}\beta^{(2)}\mathrm{s}\alpha^{(2)} & -\mathrm{c}^2\beta^{(2)}\mathrm{s}\alpha^{(2)} \\ \mathrm{c}\alpha^{(2)}\mathrm{s}\alpha^{(2)} & \mathrm{c}^2\alpha^{(2)} & \mathrm{s}\beta^{(2)}\mathrm{c}\beta^{(2)}\mathrm{c}\alpha^{(2)} & -\mathrm{c}^2\beta^{(2)}\mathrm{c}\alpha^{(2)} \\ \mathrm{s}\beta^{(2)}\mathrm{c}\beta^{(2)}\mathrm{s}\alpha^{(2)} & \mathrm{s}\beta^{(2)}\mathrm{c}\beta^{(2)}\mathrm{c}\alpha^{(2)} & \mathrm{s}^2\beta^{(2)} & -\mathrm{s}\beta^{(2)}\mathrm{c}\beta^{(2)} \\ -\mathrm{c}^2\beta^{(2)}\mathrm{s}\alpha^{(2)} & -\mathrm{c}^2\beta^{(2)}\mathrm{c}\alpha^{(2)} & -\mathrm{s}\beta^{(2)}\mathrm{c}\beta^{(2)} & \mathrm{c}^2\beta^{(2)} \end{bmatrix}$$

$$\mathbf{k}_{\mathbf{r3}}^{(2)\mathbf{n}} = k_{rn}^{(2)} \begin{bmatrix} \mathrm{c}^2\beta^{(2)}\mathrm{s}^2\alpha^{(2)} & -\mathrm{c}^2\beta^{(2)}\mathrm{c}\alpha^{(2)}\sin\alpha^{(2)} & \mathrm{s}\beta^{(2)}\mathrm{c}\beta^{(2)}\mathrm{s}\alpha^{(2)} & -\mathrm{c}^2\beta^{(2)}\mathrm{s}\alpha^{(2)} \\ -\mathrm{c}^2\beta^{(2)}\mathrm{c}\alpha^{(2)}\mathrm{s}\alpha^{(2)} & \mathrm{c}^2\beta^{(2)}\mathrm{c}^2\alpha^{(2)} & -\mathrm{s}\beta^{(2)}\mathrm{c}\beta^{(2)}\mathrm{c}\alpha^{(2)} & \mathrm{c}^2\beta^{(2)}\mathrm{c}\alpha^{(2)} \\ \mathrm{s}\beta^{(2)}\mathrm{c}\beta^{(2)}\mathrm{s}\alpha^{(2)} & -\mathrm{s}\beta^{(2)}\mathrm{c}\beta^{(2)}\mathrm{c}\alpha^{(2)} & \mathrm{s}^2\beta^{(2)} & -\mathrm{s}\beta^{(2)}\mathrm{c}\beta^{(2)} \\ -\mathrm{c}^2\beta^{(2)}\mathrm{s}\alpha^{(2)} & \mathrm{c}^2\beta^{(2)}\mathrm{c}\alpha^{(2)} & -\mathrm{s}\beta^{(2)}\mathrm{c}\beta^{(2)} & \mathrm{c}^2\beta^{(2)} \end{bmatrix}. \tag{A.1}$$

The related damping matrix **C** has similar form with stiffness matrix **K** by changing the stiffness parameters into corresponding damping parameters.

Nomenclature

$x_j^{(i)}(y_j^{(i)}, z_j^{(i)})$: Translational displacement of component j in the ith stage in $x(y, z)$ direction

$\dot{x}_j^{(i)}(\dot{y}_j^{(i)}, \dot{z}_j^{(i)})$: Translational velocity of component j in the ith stage in $x(y, z)$ direction

$\ddot{x}_j^{(i)}(\ddot{y}_j^{(i)}, \ddot{z}_j^{(i)})$: Translational acceleration of component j in the ith stage in $x(y, z)$ direction

$u_j^{(i)}$: Rotational displacement of component j in the ith stage in u direction

$\dot{u}_j^{(i)}$: Rotational velocity of component j in the ith stage in u direction

$\ddot{u}_j^{(i)}$: Rotational acceleration of component j in the ith stage in u direction

$\xi_n^{(i)}(\eta_n^{(i)}, \upsilon_n^{(i)})$: Translational displacement of the planet n in the ith stage in $\xi(\eta, \upsilon)$ direction

$\dot{\xi}_n^{(i)}(\dot{\eta}_n^{(i)}, \dot{\upsilon}_n^{(i)})$: Translational velocity of the planet n in the ith stage in $\xi(\eta, \upsilon)$ direction

$\ddot{\xi}_n^{(i)}(\ddot{\eta}_n^{(i)}, \ddot{\upsilon}_n^{(i)})$: Translational acceleration of the planet n in the ith stage in $\xi(\eta, \upsilon)$ direction

$u_n^{(i)}$: Rotational displacement of the planet n in the ith stage in u direction

$\dot{u}_n^{(i)}$: Rotational velocity of the planet n in the ith stage in u direction

$u_n^{(i)}$: Rotational acceleration of the planet n in the ith stage in u direction

N_i: Number of planets in stage i

$I_g^{(i)}$: Moment of inertia of the component j in stage i

$m_g^{(i)}$: Mass of the component j in stage i

$\psi_n^{(i)}$: Circumferential angle of the planet n in stage i

$b^{(i)}$: Backlash of stage i

$\theta_j^{(i)}$: Torsional angular displacement of component j in the ith stage

$r_j^{(i)}$: Base circle radius

$k_{jn}^{(i)}(c_{jn}^{(i)})$: Mesh stiffness (damping) of the nth sun-planet or ring-planet

$k_{ju}^{(i)}(c_{ju}^{(i)})$: Torsional stiffness (damping) of component j in the ith stage ($j = c, s, r, 1, 2, \ldots, N_i$)

$k_{jx}^{(i)}, k_{jy}^{(i)}, k_{jz}^{(i)}(c_{jx}^{(i)}, c_{jy}^{(i)}, c_{jz}^{(i)})$: Bearing stiffness (damping) of component j in the ith stage in $x(y, z)$ direction

$k_{jx}^{(1,2)}, k_{jy}^{(1,2)}, k_{jz}^{(1,2)}, k_{ju}^{(1,2)}$ $(c_{jx}^{(1,2)}, c_{jy}^{(1,2)}, c_{jz}^{(1,2)}, c_{ju}^{(1,2)})$: Interstage coupling stiffness (damping) in $x(y, z, u)$ direction ($j = cs, r$)

$\alpha_s^{(i)}, \alpha_r^{(i)}$: Pressure angle of sun-planet and ring-planet of stage i

$\beta^{(i)}$: Helix angle of stage i

$T_{\text{in}}(T_{\text{out}})$: Import (output) torque.

Subscripts

c: Carrier gear

r: Ring gear

s: Sun gear

n: nth planet gear.

Competing Interests

The authors declare that there is no conflict of interests regarding the publication of this paper.

Acknowledgments

This work was supported by the National Natural Science Foundation of China (no. 51175299).

References

[1] P. Sondkar and A. Kahraman, "A dynamic model of a double-helical planetary gear set," *Mechanism and Machine Theory*, vol. 70, pp. 157–174, 2013.

[2] A. Kahraman, "Natural modes of planetary gear trains," *Journal of Sound and Vibration*, vol. 173, no. 1, pp. 125–130, 1994.

[3] J. Lin and R. G. Parker, "Analytical characterization of the unique properties of planetary gear free vibration," *Journal of Vibration and Acoustics*, vol. 121, no. 3, pp. 316–321, 1999.

[4] J. Lin and R. G. Parker, "Structured vibration characteristics of planetary gears with unequally spaced planets," *Journal of Sound and Vibration*, vol. 233, no. 5, pp. 921–928, 2000.

[5] J. Lin and R. G. Parker, "Sensitivity of planetary gear natural frequencies and vibration modes to model parameters," *Journal of Sound and Vibration*, vol. 228, no. 1, pp. 109–128, 1999.

[6] T. Eritenel and R. G. Parker, "Modal properties of three-dimensional helical planetary gears," *Journal of Sound and Vibration*, vol. 325, no. 1-2, pp. 397–420, 2009.

[7] Z. Sheng, J. Tang, S. Chen, and Z. Hu, "Modal analysis of double-helical planetary gears with numerical and analytical approach," *Journal of Dynamic Systems, Measurement and Control, Transactions of the ASME*, vol. 137, no. 4, Article ID 041012, 2015.

[8] P.-Y. Qian, Y.-L. Zhang, G. Cheng, S.-R. Ge, and C.-F. Zhou, "Model analysis and verification of 2K-H planetary gear system," *Journal of Vibration and Control*, vol. 21, no. 10, pp. 1946–1957, 2013.

[9] V. Abousleiman and P. Velex, "A hybrid 3D finite element/lumped parameter model for quasi-static and dynamic analyses of planetary/epicyclic gear sets," *Mechanism and Machine Theory*, vol. 41, no. 6, pp. 725–748, 2006.

[10] L. Zhang, Y. Wang, K. Wu, R. Sheng, and Q. Huang, "Dynamic modeling and vibration characteristics of a two-stage closed-form planetary gear train," *Mechanism and Machine Theory*, vol. 97, pp. 12–28, 2016.

[11] C. G. Cooley and R. G. Parker, "Vibration properties of high-speed planetary gears with gyroscopic effects," *Journal of Vibration and Acoustics, Transactions of the ASME*, vol. 134, no. 6, Article ID 61014, 2012.

[12] X. Gu and P. Velex, "A lumped parameter model to analyse the dynamic load sharing in planetary gears with planet errors," *Applied Mechanics and Materials*, vol. 86, pp. 374–379, 2011.

[13] Z. Chen and Y. Shao, "Dynamic features of a planetary gear system with tooth crack under different sizes and inclination angles," *Journal of Vibration and Acoustics, Transactions of the ASME*, vol. 135, no. 3, Article ID 031004, 2013.

[14] X. Gu and P. Velex, "On the dynamic simulation of eccentricity errors in planetary gears," *Mechanism and Machine Theory*, vol. 61, pp. 14–29, 2013.

[15] J. Yang and P. Yang, "Random vibration analysis of planetary gear trains," *Journal of Vibration and Acoustics, Transactions of the ASME*, vol. 135, no. 2, 2013.

[16] D. Qin, Z. Zhou, J. Yang, and H. Chen, "Time-dependent reliability analysis of gear transmission system of wind turbine under stochastic wind load," *Journal of Mechanical Engineering*, vol. 48, no. 3, pp. 1–8, 2012.

[17] V. K. Ambarisha and R. G. Parker, "Nonlinear dynamics of planetary gears using analytical and finite element models," *Journal of Sound and Vibration*, vol. 302, no. 3, pp. 577–595, 2007.

[18] X. Wu and R. G. Parker, "Modal properties of planetary gears with an elastic continuum ring gear," *Journal of Applied Mechanics, Transactions ASME*, vol. 75, no. 3, 12 pages, 2008.

[19] F. Cunliffe, J. D. Smith, and D. B. Welbourn, "DYNAMIC TOOTH LOADS IN EPICYCLIC GEARS.," *J Eng Ind Trans ASME*, vol. 96, no. 2, pp. 578–584, 1974.

[20] J. G. Wang, Y. Wang, Y. Y. An, and Q. L. Huang, "Sensitivity analysis of natural frequency to structural parameters of helical gear shaft for wind turbine gearbox," *Applied Mechanics and Materials*, vol. 86, pp. 380–383, 2011.

[21] A. Kahraman, "Dynamic analysis of a multi-mesh helical gear train," *Journal of Mechanical Design, Transactions Of the ASME*, vol. 116, no. 3, pp. 706–712, 1994.

[22] A. Kahraman, H. N. Ozguven, D. R. Houser, and J. J. Zakrajsek, "Dynamic analysis of geared rotors by finite elements," *Journal of Mechanical Design—Transactions of the ASME*, vol. 114, no. 3, pp. 507–514, 1992.

[23] L. Vedmar and B. Henriksson, "A general approach for determining dynamic forces in spur gears," *Journal of Mechanical Design, Transactions of the ASME*, vol. 120, no. 4, pp. 593–598, 1998.

[24] S. Baud and P. Velex, "Static and dynamic tooth loading in spur and helical geared systems-experiments and model validation," *Journal of Mechanical Design, Transactions of the ASME*, vol. 124, no. 2, pp. 334–346, 2002.

[25] A. Fernandez Del Rincon, F. Viadero, M. Iglesias, P. García, A. De-Juan, and R. Sancibrian, "A model for the study of meshing stiffness in spur gear transmissions," *Mechanism and Machine Theory*, vol. 61, pp. 30–58, 2013.

[26] M. Gradu, K. Langenbeck, and B. Breunig, "Planetary gears with improved vibrational behaviour in automatic transmissions," *VDI BERICHTE*, vol. 1230, pp. 861–882, 1996.

[27] V. Abousleiman, P. Velex, and S. Becquerelle, "Modeling of spur and helical gear planetary drives with flexible ring gears and planet carriers," *Journal of Mechanical Design, Transactions of the ASME*, vol. 129, no. 1, pp. 95–106, 2007.

[28] M. Kubur, A. Kahraman, D. M. Zini, and K. Kienzle, "Dynamic analysis of a multi-shaft helical gear transmission by finite elements: model and experiment," *Journal of Vibration and Acoustics, Transactions of the ASME*, vol. 126, no. 3, pp. 398–406, 2004.

[29] A. Al-Shyyab and A. Kahraman, "Non-linear dynamic analysis of a multi-mesh gear train using multi-term harmonic balance method: period-one motions," *Journal of Sound and Vibration*, vol. 284, no. 1-2, pp. 151–172, 2005.

[30] A. Al-Shyyab and A. Kahraman, "Non-linear dynamic analysis of a multi-mesh gear train using multi-term harmonic balance method: sub-harmonic motions," *Journal of Sound and Vibration*, vol. 279, no. 1-2, pp. 417–451, 2005.

[31] A. Al-shyyab and A. Kahraman, "A non-linear dynamic model for planetary gear sets," *Proceedings of the Institution of Mechanical Engineers, Part K: Journal of Multi-body Dynamics*, vol. 221, no. 4, pp. 567–576, 2007.

[32] Z. Chen, Y. Shao, and D. Su, "Dynamic simulation of planetary gear set with flexible spur ring gear," *Journal of Sound and Vibration*, vol. 332, no. 26, pp. 7191–7204, 2013.

[33] M. Chapron, P. Velex, J. Bruyère, and S. Becquerelle, "Optimization of profile modifications with regard to dynamic tooth loads in single and double-helical planetary gears with flexible ring-gears," *Journal of Mechanical Design, Transactions of the ASME*, vol. 138, no. 2, Article ID 023301, 2016.

[34] T. M. Ericson and R. G. Parker, "Planetary gear modal vibration experiments and correlation against lumped-parameter and finite element models," *Journal of Sound and Vibration*, vol. 332, no. 9, pp. 2350–2375, 2013.

[35] A. Kahraman, "Planetary gear train dynamics," *Journal of Mechanical Design, Transactions Of the ASME*, vol. 116, no. 3, pp. 713–720, 1994.