Hindawi
Shock and Vibration
Volume 2019, Article ID 6108796, 8 pages
https://doi.org/10.1155/2019/6108796

Research Article

Stable Switching Control Strategy of the Support Pressure and Velocity of Shield Machine Gripper Shoes

Nannan Liu,[1] **Jishen Peng**,[1] **Liye Song**,[1] **Pinhe Wang**,[2] **and Kun Zhang**[3]

[1]*Faculty of Electrical and Control Engineering, Technical University, No. 188, Longwan Road, Xingcheng District, Huludao City, Liaoning Province 125105, China*
[2]*School of Computer Science and Engineering, Northeastern University, No. 3, Wenhua Road, Shenhe District, Shenyang City, Liaoning Province 110819, China*
[3]*College of Mechanical and Electronic Engineering, Shandong University of Science and Technology, No. 579, Qianwangang Road, Huangdao District, Qingdao, Shandong 266590, China*

Correspondence should be addressed to Nannan Liu; liunn121@163.com and Kun Zhang; zhangkunliaoning@163.com

Received 5 July 2019; Accepted 3 October 2019; Published 4 December 2019

Academic Editor: Filippo Ubertini

An electro-hydraulic servo position and pressure compound control method was investigated considering the working principle of a hydraulic stepping motor of a shield machine gripper shoe and its practical working characteristics in the supporting process. The control targets were to improve the support efficiency and reduce the disturbance of gripper shoes on the surrounding rock. In this method, a fuzzy switching controller was used to switch between electro-hydraulic position control and electro-hydraulic pressure control. Numerical and prototype simulation experiments were conducted on the control method. The theoretical analysis and experimental results showed that the control method could effectively convert the gripper shoes from an unsupported state to a supported state in a short amount of time, as well as realize surge-free switching between position control and pressure control. Thus, disturbance of the gripper shoes on the surrounding rock could be reduced. The results of this study provide a theoretical basis for research on control strategies of hydraulic stepping propulsion of shield machines.

1. Introduction

The supporting-propulsion-step-changing system is a key subsystem of open shield machines. The propulsion system consists of two sets of hydraulic cylinders arranged symmetrically on each side. The gripper shoe system includes a set of gripper shoe hydraulic cylinders and a set of torque hydraulic cylinders. The propulsion system provides the propelling force required for cutting tools to break the rock. During propulsion, the gripper shoes push on the side walls of the excavated tunnel to bear the propelling reaction force and the reverse torque transferred from the cutter head. In addition to providing the propelling force for the shield machine cutting tool to break the rock, the supporting-propulsion-step-changing system is also responsible for attitude adjustment of the mainframe [1, 2]. Research on the supporting-propulsion-step-changing system of the shield machine is of great importance to realize stable switching control between the support pressure and velocity; furthermore, it is important when selecting working parameters, reducing step-changing time, and improving shield machine stability.

Duan [3] analyzed the forces on a dissimilar shaft with a cross-pin shaft structure, which connected the gripper shoe hydraulic cylinder and the saddle frame, under conditions such as direct tunneling, support step change, horizontal adjustment, vertical adjustment, and turning. A static mechanical simulation was also conducted to verify the experimental results. Wang et al. [4] analyzed the structure of and forces on double spherical components of a shield machine gripper shoe supporting system and conducted a static mechanical simulation on these components at different positions in the oil groove to optimize their structure. Li et al. [5] used a three-dimensional modeling method to

analyze and calculate the stress on the guide sleeve of a gripper hydraulic cylinder when subjected to partial loads, which served as a basis for the optimal design of the part. A force analysis of the structural components of a gripper shoe was conducted by Zhang et al. [6]. Their research results indicated that the stress on the structural components of a gripper shoe can be reduced by increasing the spherical surface area or by the addition of a convex plate; these results were used to optimize the design of the components.

Zhan and Jia [7] established a gripper shoe hydraulic system model based on the hydraulic component library of AMEsim. Processes such as fast retraction of the gripper rod, the gripper shoes pushing on the rocks, and horizontal adjustment were simulated. The principles and dynamic performance of the hydraulic system were analyzed. Based on the TBM electromechanical coupling dynamic model, Junzhou et al. [8] analyzed the synchronization of motors' output torque and three-dimensional vibration condition under torque master-slave and rotate speed parallel control with impact dynamic loads on cutter head. In order to coordinate the gripper and thrust system of single gripping hard rock TBM and get higher complex geology adaptability, Yunyi et al. [9] designed a gripper and thrust coordinated control system. The mechanical model of the TBM gripper and thrust was proposed, and the theoretical optimal interrelation between gripper cylinder and thrust cylinder pressure was derived from it. A TBM hydraulic system coordinating gripper and thrust cylinder was designed, dynamic simulation analyses were performed with AMESim, and the validity analysis was based on the thrust pressure spectrum of practical engineering. Considering the impact of nonlinear factors of induction motor, gear pump, proportional pressure valves, hydraulic cylinder, etc., the mathematical rectifying model has been built for TBM thrusting by bond graph, while the system state-space representation is derived. Grey prediction is applied in traditional PID control regarding the characteristics of working conditions of TBM GTR mechanism. The SGPID control algorithm is proposed for pressure control in hydraulic synchronizing of the thrusting system [10]. Lu [11] modified the control method of the open variable system for the ripper shoe hydraulic system of a double-shield machine and established a simulation model on the AMEsim platform to analyze the output pressure flow characteristics of the system under different working conditions. The accuracy of the control method was then verified in combination with a debugging test.

The studies described above largely focus on the forces on the gripper structure and the hydraulic control system of the shield machine. In-depth investigations on the compound control strategy of the electro-hydraulic velocity and pressure have not been conducted for the support process of gripper shoes.

2. Working Mechanism of Shield Machine Gripper Shoe

The supporting-propulsion-step-changing system is the core transmission component of the shield machine, which helps realize continuous cycle operation. A typical model of a supporting-propulsion-step-changing system of an open-type shield machine is shown in Figure 1. The system is primarily composed of the main beam, saddle frame, torque cylinder, horizontal supporting cylinder, propulsion cylinder, left and right gripper shoes, and rear leg. The main beam and the saddle frame are connected by a sliding pair, and the two ends of the torque oil cylinder are connected to the saddle frame and the supporting cylinder through ball joints, which are also used to hinge the horizontal supporting cylinder with the left and right gripper shoes. The two ends of the propulsion cylinder are correspondingly connected to the main beam and the gripper shoes through universal joints, and the saddle frame is connected to the supporting cylinder through universal ball joints and sliding pair [12, 13].

Tunneling excavation by the shield machine is realized by three sets of drive cylinders, which include, as shown in Figure 2, two sets of propulsion cylinders on both sides, two sets of torque cylinders on both sides, and horizontal supporting cylinders on both sides. The control principles and functions of each set of drive cylinders are as follows:

(1) Propulsion cylinder: Both the left and right propulsion cylinders use the same oil circuit and flow control mode to drive the main beam and the cutter head in order to realize propulsion. Therefore, the two sets of propulsion cylinders can be considered as one independent driving system.

(2) Torque cylinder: The left and right sets of torque cylinders are driven independently; however, the cylinders on the same side use the same oil circuit and flow control mode. During excavation, when the left and right sets of torque cylinders slightly expand and contract with the same length, the main beam is driven through the saddle frame to adjust the pitch angle of the cutter head. Only when the shield machine rolls sideways along the main beam axis direction, does it required to be rotated and reset toward the opposite direction, under shutdown conditions, by driving the expansion and contraction of the left and right torque cylinders individually. Therefore, when the left and right sets of torque cylinders are both slightly extended and contracted with the same length during the tunneling operation, they can be regarded as one independent driving system.

(3) Horizontal supporting cylinder: The horizontal supporting cylinders on the left and right sides are controlled by the same oil circuit. When the shield machine is used for tunneling operation, the cylinders extend such that the gripper shoes apply pressure on the surrounding rock. The horizontal supporting cylinders on both sides can be regarded as an independent driving system.

According to the schematic of the supporting hydraulic system in Figure 2, the transfer function block diagrams for controlling the displacement of the hydraulic cylinder and the output force of the hydraulic cylinder are shown in Figures 3 and 4, respectively.

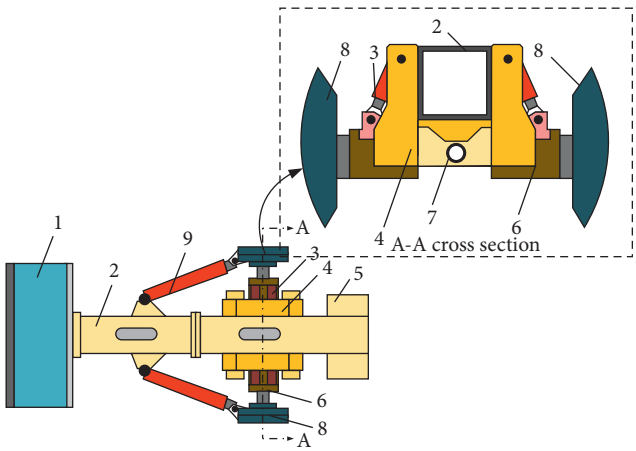

Figure 1: Horizontal single-support structure model of the shield machine. 1, cutter head; 2, main beam; 3, torque cylinder; 4, saddle frame; 5, rear leg; 6, horizontal supporting cylinder; 7, cross pin; 8, gripper shoe; 9, propulsion cylinder.

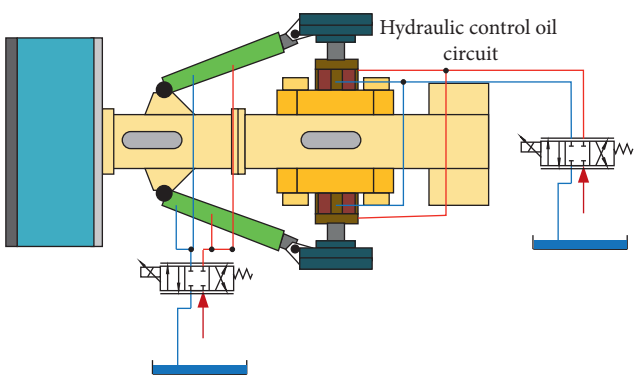

Figure 2: Schematic of the hydraulic system of the shield machine.

In Figure 3, U_s is voltage signal of set value of pressure (V); U_e is the input voltage signal of the electro-hydraulic proportional valve amplifier (V); U_r is the output voltage signal of the force sensor (V); K_a is the gain of the electro-hydraulic proportional valve amplifier (mA/V); K_{sv} is the gain of the electro-hydraulic proportional valve spool displacement (m/(mA)); G_{sv} is the transfer function of the electro-hydraulic proportional valve; X_v is the electro-hydraulic proportional valve spool displacement (m); K_q is the flow gain of the electro-hydraulic proportional valve ($m^3/(s{\cdot}m^{-1})$); K_{ce} is the pressure flow coefficient of the proportional valve ($m^3/(Pa{\cdot}s)$); β_e is the comprehensive volumetric elastic modulus of the hydraulic oil (N/m); V is the total volume of the volume chamber of the hydraulic cylinder (m^3); A_p is the equivalent working area of the hydraulic cylinder (m^2); P_L is the pressure difference between the two hydraulic cylinders (Pa); P is the output force of the hydraulic cylinder (kN); m is the equivalent mass of the load (kg); B_L is the damping coefficient of the hydraulic cylinder (N·s/m); K_F is the feedback gain of the force sensor (V/N); k is the elastic coefficient of the load, (N/m); X_p is the displacement of the hydraulic cylinder, (m); and Q_L is the system flow, (L/min).

Assuming that the electro-hydraulic servo valve is an ideal slide valve, based on the above analysis, the basic flow equation of the electro-hydraulic servo valve, the flow continuity equation of the hydraulic cylinder, and the equilibrium equation can be obtained as follows:

$$\begin{cases} Q_L = K_q x_v - K_{ce} P_L, \\ Q_L = A_p \dfrac{dx_p}{dt} + C_t P_L + \dfrac{V}{4\beta_e}\dfrac{dP_L}{dt}, \\ A_p P_L = m\dfrac{d^2 x_p}{dt^2} + B_L \dfrac{dx_p}{dt} + k x_p + F_L, \end{cases} \tag{1}$$

where C_t is the total leakage coefficient of the hydraulic cylinder, ($m^3/(s{\cdot}Pa)$).

The transfer function between the spool displacement and the output force of the hydraulic cylinder can be obtained by simplifying equation (1) by using the Laplace transform:

$$\frac{P}{X_v} = \frac{\left(K_q/K_{ce}\right)A_p\left((m/k)s^2+1\right)}{(Vm/4\beta_e K_{ce}k)s^3 + (m/k)s^2 + \left(\left(V/4\beta_e K_{ce}\right) + \left(A_p^2/K_{ce}k\right)\right)s + 1}. \tag{2}$$

To simplify the dynamic characteristics of the system, the transfer function of the electro-hydraulic servo valve is approximated by the second-order oscillation model. Then, the transfer function can be obtained:

$$G_{sv}(s) = \frac{K_{sv}}{\left(1/\omega_{sv}^2\right)s^2 + \left(2\xi_{sv}/\omega_{sv}\right)s + 1}, \tag{3}$$

where ω_{sv} is the natural frequency of the electro-hydraulic servo valve, (rad/s) and ζ_{sv} is the damping ratio of the electro-hydraulic servo valve [14].

It can be seen that the requirements of the structure and parameters of the controller are different for the two control methods. Therefore, it is impossible to simultaneously perform pressure and position control with only one controller.

3. Position and Pressure Compound Control Method

3.1. Analysis of Parallel Compound Control Method. Currently, there have been extensive studies on separate control by electro-hydraulic position or electro-hydraulic pressure. However, organically combining the two control methods for smooth switching still needs to be studied. The current compound control of electro-hydraulic position and pressure is mainly realized through parallel connection. The schematic of the parallel pressure and position control is shown in Figure 5 [15, 16].

In the parallel control, the position and pressure control loops are designed separately, and the transfer of the system from position loop to pressure control is realized through the set position switch point and switch valve. The advantage of parallel control is that the existing mature electro-hydraulic position and pressure control strategy can be applied

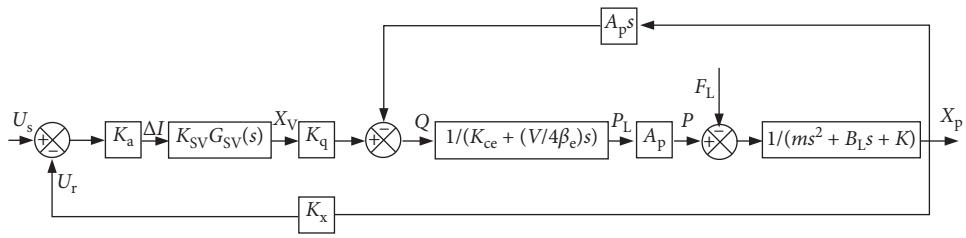

Figure 3: Transfer function block diagram of the position control system.

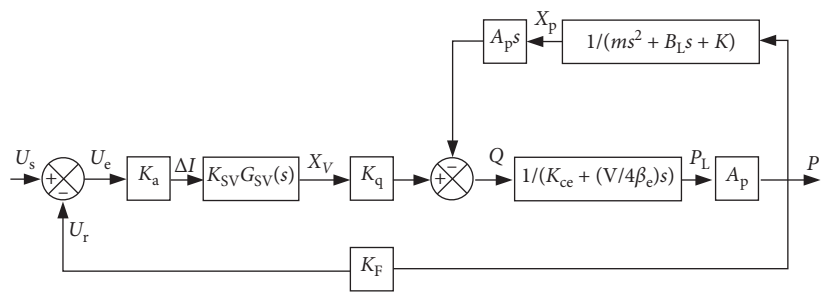

Figure 4: Transfer function block diagram of the force control system.

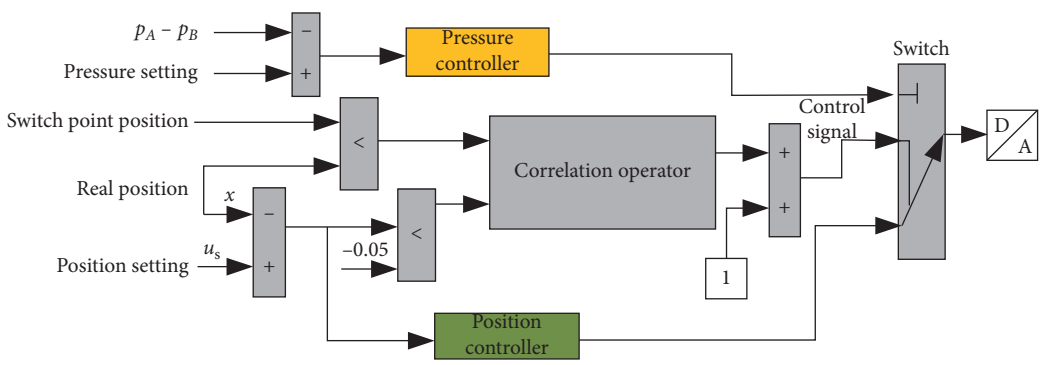

Figure 5: Schematic of parallel pressure and position control.

to separate control loops. The disadvantage is that because the two control loops work simultaneously, a considerable effect is observed on the system if they are not properly switched at the switch point. If the switch from the position control to the pressure control is not completed in time, the support system will exert a large force on the surrounding rocks, which has a considerable influence on the stability of the entire tunnel.

3.2. Fuzzy Switching Control Method. Using the fuzzy switching control method described in [17], the electro-hydraulic servo position and pressure compound control system of shield support is established, and its schematic diagram is shown in Figure 6(a); the fuzzy switching controller is added on the basis of the parallel switching compound control system. To make the analysis and implementation easier, a common PID controller was used in the closed position control loop and a fuzzy controller was used in the closed pressure control loop. The fuzzy switching controller was a single-input single-output one-dimensional fuzzy controller. Its input was a force sensor mounted on the gripper shoe, and the output was the switching factor α. The working principle is that the contact condition between the gripper shoes and the supporting surrounding rocks was detected by the force sensor, and the value of the switching factor α was calculated by the fuzzy controller. In the pressure control loop, the pressure output of the electro-hydraulic servo system is compared with the set value and then multiplied by the switching factor α. The obtained value is the input of the pressure closed-loop system. In the position control loop, the displacement output of the electro-hydraulic servo system is compared with the set value and then multiplied by the switching factor $(1 - \alpha)$. The obtained value is the input of the position closed-loop system. When the force between the gripper shoes and the surrounding rocks detected by the sensor is 0, the gripper shoes are not in contact with the surrounding rocks. In this scenario, the output of the switching factor α is almost 0; therefore, the input of the pressure control loop was 0. That is, the system is

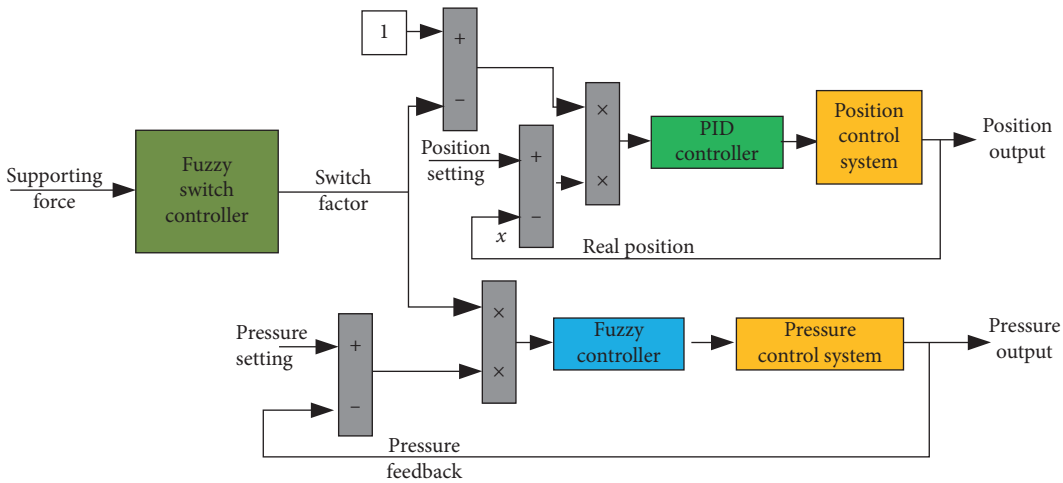

Figure 6: Fuzzy switching control diagram.

in the position control loop. When the force between the gripper shoes and the surrounding rocks detected by the sensor is not 0, it implies that the gripper shoes are in contact with the surrounding rocks. In this case, the output of the switching factor α is approximately 1; therefore, the input of the position control loop is 0 [18]. The system is in the pressure control loop. In this manner, because of the effect of the switching factor, the system can smoothly switch from the position control to the pressure control. The concussion and impact caused by sudden switching can be avoided; thus, the supporting and tunnel surrounding rocks can be protected.

4. Simulation Analysis

The fuzzy switching controller is a single-input single-output one-dimensional fuzzy controller. Fuzzing and defuzzing are therefore required for the input force signal P and output switching factor α, respectively. When operated using the fuzzy controller, the system switching between position and pressure controls mainly occurs when the supporting force is 0 and maximum set value. When the switching factor α is 0 and 1 and the corresponding supporting force P is around 0 and maximum value, the effect on the fuzzy switching controller is relatively significant. Therefore, when setting the fuzzy domain of the supporting force P and switching factor α, selection needs to be relatively dense in the vicinities of 0 and 1. The conventional uniformly divided domain is inapplicable in this case. The supporting force P is set in the range of [0, 1] kN, and the fuzzy subset CP_1 = {NB, NM, NO, NS, O, PS, PO, PM, PB} is used to represent the true value subset {1, 0.95, 0.85, 0.8, 0.5, 0.2, 0.15, 0.05, 0}. The switching factor α is set in the range of [0, 1], and the fuzzy subset CP_2 = {VB, MB, B, NB, M, NS, S, MS, VS} is used to represent the values {1, 0.95, 0.9, 0.85, 0.5, 0.15, 0.1, 0.05, 0} [17].

The parameters of the control system simulation model were determined based on the actual working conditions of the shield machine model prototype, as shown in Table 1. A fuzzy PID controller was employed as the independent pressure controller, and its fuzzy PID parameters were set as follows: $K_{PP} = 2.2$, $K_{PI} = 0.05$, and $K_{PD} = 0.6$; a common PID controller was used as the independent position controller, and its PID parameters were as follows: $K_{XP} = 1.6$, $K_{XI} = 0.1$, and $K_{XD} = 2.2$.

Table 1: Simulation parameters.

Parameter	Value
Hydraulic cylinder displacement (mm)	500
Simulation time (s)	30
Servo valve orifice area gradient ratio	2
Hydraulic cylinder damping coefficient ($N{\cdot}s{\cdot}m^{-1}$)	300
Hydraulic cylinder velocity ($mm{\cdot}s^{-1}$)	300
Servo valve spool displacement gain ($mm{\cdot}V^{-1}$)	0.1
Hydraulic cylinder total leakage coefficient/ $m^5{\cdot}(N{\cdot}s)^{-1}$	700

For the fuzzy switching mode, the switching controller automatically switched by detecting the contact force between the gripper shoes and surrounding rocks. Therefore, there was no need to set the position switch point.

Simulation comparisons were performed for position and pressure compound control of the electro-hydraulic servo system employing fuzzy and parallel compound switching controls (i.e., direct switching). The displacement and velocity curves of the hydraulic cylinder are thus obtained as shown in Figure 7. The pressure and output force curves of the two chambers of the hydraulic cylinder are shown in Figure 8.

Under the action of direct switching control method and fuzzy switching control method, the hydraulic cylinder of the shield machine support slipper starts to stretch out at the 6th second and retracts at the 18th second. In this process, the hydraulic cylinder first arrives near the set switching point in the speed control mode, and then the system switches to the pressure control mode. The hydraulic cylinder slowly approaches the support position, at which time the pressure of the hydraulic cylinder gradually rises to establish the support load. The simulation results show that when using direct switching, the velocity output of the

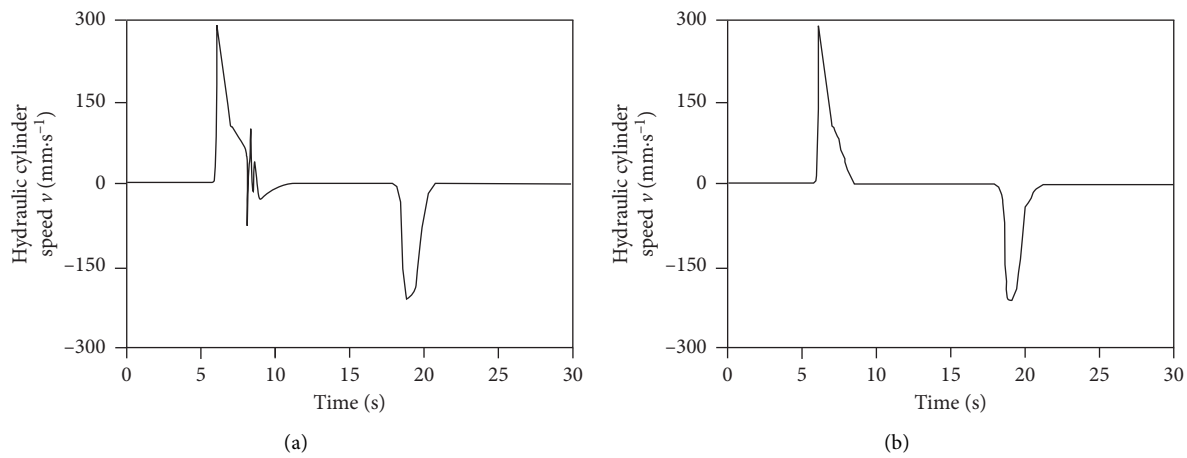

Figure 7: Hydraulic cylinder velocity and displacement curves. (a) Direct switching control. (b) Fuzzy switching control.

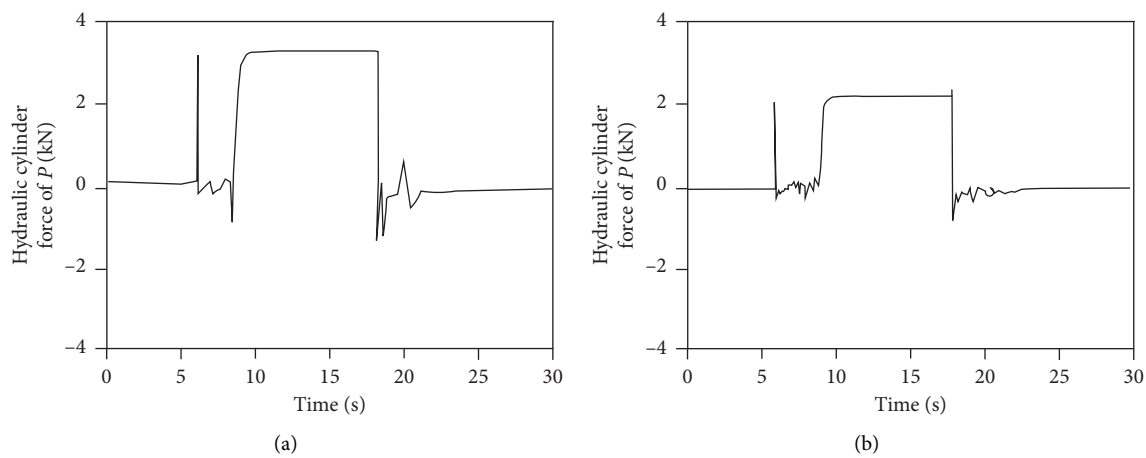

Figure 8: Hydraulic cylinder two chamber pressure and output force curves. (a) Direct switching control. (b) Fuzzy switching control.

hydraulic cylinder fluctuates obviously and the supporting load fluctuates accordingly, which will inevitably lead to the out-of-control of the position of the hydraulic cylinder and the impact on the supporting surrounding rock. The method of fuzzy switching control has better ability of smooth transition, and the fluctuation of velocity and supporting load of the hydraulic cylinder is smaller.

5. Experimental Analysis

In order to verify the feasibility of the electro-hydraulic servo position and pressure compound control system based on the fuzzy switching control method and the correctness of the simulation results, a simulation test bench for shield machine support condition is built. By using two kinds of control systems for shield machine support, the change of support hydraulic cylinder speed and support load under the action of two kinds of control systems is monitored, and the advantages and disadvantages of the two control methods are compared. When the direct switching method (i.e., parallel compound control method) was used for the position and pressure compound control of the electro-hydraulic servo system, the gripper cylinder rapidly extended upward at a speed of 300 mm/s under position control. The system automatically switched to pressure control, while the gripper cylinder continued extending until establishing contact with the surrounding rock.

When the fuzzy switching method was used for the position and pressure compound controls of the electro-hydraulic servo system, only the range of the input signals of the fuzzy controller were set instead of the switch point. The input signals were obtained from the force sensor.

Based on the experimental comparison, the displacement and velocity curves of the hydraulic cylinder are obtained as shown in Figure 9. The pressure and output force curves of the two chambers of the hydraulic cylinder are shown in Figure 10.

Comparing the simulated curves with the measured curves, it can be seen that the trends are almost identical. The slight difference seen was caused by the sampling frequency of the measured curves. The feasibility of establishing the electro-hydraulic servo position and pressure control system

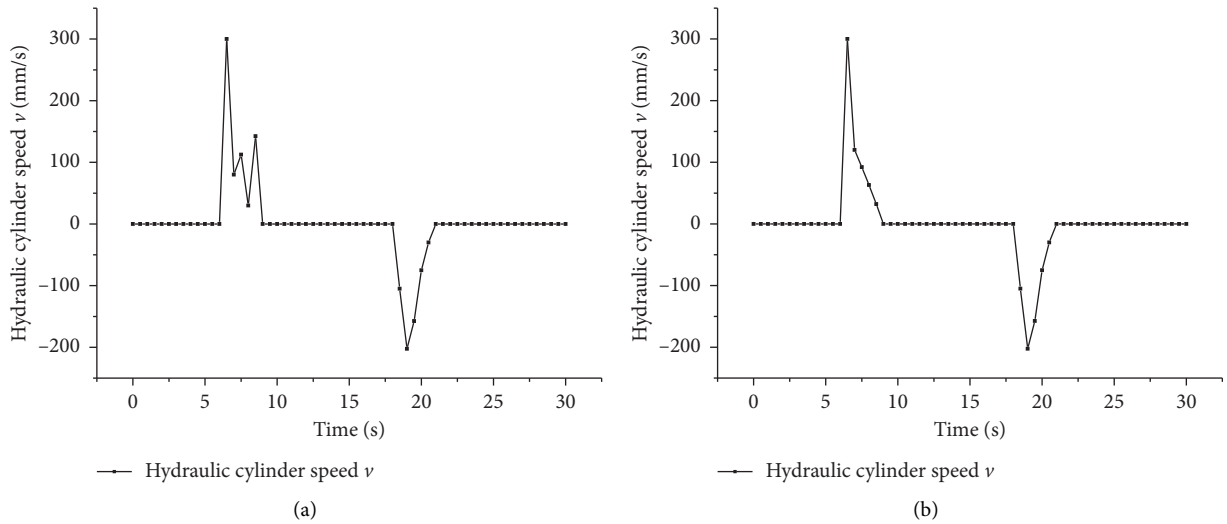

Figure 9: Hydraulic cylinder velocity and displacement curves. (a) Direct switching control. (b) Fuzzy switching control.

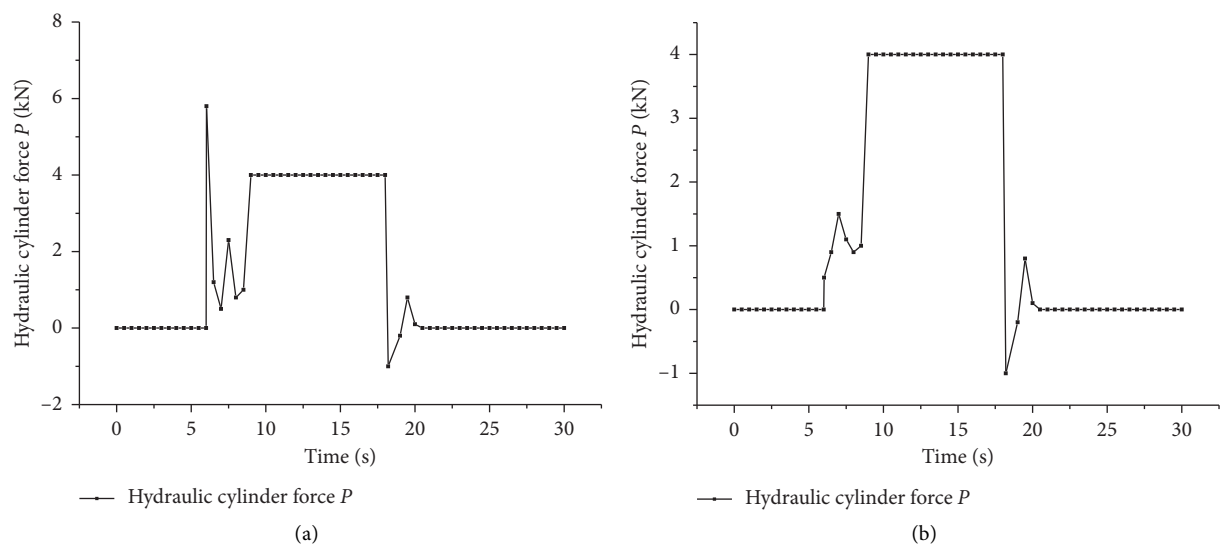

Figure 10: Pressure and output force curves of the two chambers of the hydraulic cylinder. (a) Direct switching control. (b) Fuzzy switching control.

of shield machine support based on the fuzzy switching control method is verified.

6. Conclusions

(1) In order to solve the practical problem of improving support efficiency of the shield machine by applying the position and pressure compound control methods of the electro-hydraulic servo hydraulic system, the working principles of the shield machine support mechanism and the electro-hydraulic servo system were analyzed.

(2) Through the simulation curve of hydraulic cylinder speed during switching control, it can be seen that the output of hydraulic cylinder speed fluctuates obviously at the position of switching point when using direct switching. However, in terms of performance, the method of fuzzy switching control can have better ability of smooth transition.

(3) Based on a comparison of the experimental measurement, the proposed fuzzy switch controller can effectively overcome the drawbacks of the traditional direct switching mode and reduce the concussion and impact caused during the switching process, smoothen the switching process, and provide protection to the shield machine and surrounding rocks in the tunnel.

Data Availability

The data used to support the findings of this study are available from the corresponding author upon request.

Conflicts of Interest

The authors declare that they have no conflicts of interest.

Acknowledgments

This study was supported by grant no. 51874158 received from the National Natural Science Foundation of China and Liaoning Provincial Key R&D Guidance Plan (2019JH8/10100050) and Liaoning Education Fund No.: LJ2019FL003.

References

[1] E. Farrokh, J. Rostami, and C. Laughton, "Study of various models for estimation of penetration rate of hard rock TBMs," *Tunnelling and Underground Space Technology*, vol. 30, pp. 110–123, 2012.

[2] E. Farrokh and J. Rostami, "Effect of adverse geological condition on TBM operation in ghomroud tunnel conveyance project," *Tunnelling and Underground Space Technology*, vol. 24, no. 4, pp. 267–275, 2009.

[3] S. Duan, *Research on the Special-Shaped Shaft of Key Parts of TBM Support System*, Zhengzhou University, Zhengzhou, China, 2014.

[4] D. Wang, D. Song, and B. Xiao, "TBM training system double spherical parts static analysis machine," *Manufacturing Automation*, vol. 36, no. 9, pp. 67–70, 2014.

[5] P. Li, L. Zhou, and L. Zhu, "Stress analysis and discussion of TBM supporting cylinder guide bushing," *Construction Mechanization*, no. 12, pp. 68–70, 2014.

[6] X. Zhang, Q. Jiang, and D. Wang, "Structural strength analysis and optimization of TBM boots," *Coal Mine Machinery*, vol. 36, no. 4, pp. 125–128, 2015.

[7] F. Zhan and H. Jia, "AMESim-based smart M boots system simulation research machine," *Equipment Manufacturing Technology*, no. 1, pp. 47–50, 2015.

[8] H. Junzhou, W. Hanyang, and Z. Dong, "TBM electromechanical coupling modeling and comparative analysis of synchronous drive control strategy," *Journal of Mechanical Engineering*, vol. 54, no. 1, pp. 120–126, 2018.

[9] R. Yunyi, G. Guofang, and Y. Huayong, "Coordinated control of gripper and thrust system for single gripping TBM," *Journal of Central South University (Science and Technology)*, vol. 48, no. 3, pp. 667–674, 2017.

[10] Z. Hanbing, *Modeling and Synchronous Control of TBM Gripping-Thrusting-Regripping System*, Tianjin University, Tianjin, China, 2016.

[11] C. Lu, *Research on Hydraulic System and Cutter Drive System of Double Shield TBM Support Boots*, Yanshan University, Qinhuangdao, China, 2013.

[12] D. Kongshu, T. Xiaoqiang, W. Liping, and C. Xu, "Force transmission characteristics for the non-equidistant arrangement thrust systems of shield tunneling machines," *Automation in Construction*, vol. 20, no. 5, pp. 588–595, 2011.

[13] M. Ramoni and G. Anagnostou, "Thrust force requirements for TBMs in squeezing ground," *Tunnelling and Underground Space Technology*, vol. 25, no. 4, pp. 433–455, 2010.

[14] J. Ni, *Research on Control Strategy and its Application of Steel Pipe Packing Electro-Hydraulic Servo System*, Zhejiang University, Hangzhou, China, 2006.

[15] L. Quan, X. Xu, L. I. Ming et al., "Simulation and test of electro-hydraulic servo position and pressure hybrid control principle," *Chinese Journal of Mechanical Engineering*, vol. 44, no. 09, pp. 100–105, 2008.

[16] Y. Wang, X. Wu, D. Cao et al., "Design of electro-hydraulic servo control system for coiler of hot continuous mill," *Hydraulics Pnenmatics & Seals*, no. 5, pp. 1–3, 2002.

[17] X. Miao, L. Zhixiang, C. Cheng et al., "Electro-hydraulic servo position and pressure hybrid control method of forepoling system on tunnelling," *China Mechanical Engineering*, vol. 27, no. 02, pp. 239–245, 2016.

[18] B. Gao and J. Shao, "Han Guihua fuzzy switching control between position and force for electro-hydraulic servo system," *Electric Machines and Control*, vol. 18, no. 5, pp. 99–104, 2014.