Hindawi
Wireless Communications and Mobile Computing
Volume 2021, Article ID 5537704, 15 pages
https://doi.org/10.1155/2021/5537704

Research Article

Analysis and Optimization of Low-Speed Road Noise in Electric Vehicles

Wentao Yu

School of Automotive Engineering, Tianjin Vocational Institute, Tianjin 300000, China

Correspondence should be addressed to Wentao Yu; 000855@th.tjtc.edu.cn

Received 15 January 2021; Revised 13 March 2021; Accepted 25 April 2021; Published 8 May 2021

Academic Editor: Wenqing Wu

When a certain electric vehicle is driving at a constant speed of 40 km/h on the rough asphalt road, the rear passenger can obviously feel the ear pressure, which seriously affects the comfort. Through the analysis of objective data, it was found that the problem was caused by the road excitation, which leads to the coupling between the mode of the backup door and the mode of the acoustic cavity, and causes the resonance of the car cavity, thus causing the ear pressure sensation. To solve this problem, this paper optimizes the backup door by means of experiment and simulation, increases the dynamic vibration absorber, makes its modal frequency avoid the acoustic cavity modal frequency, and achieves the purpose of reducing the interior noise. After optimization, the vehicle noise is reduced by 8 dBA at 42 Hz under 40 km/h working condition of rough road surface, and the ear pressure sensation is reduced at the same time, thus improving the NVH (noise, vibration, and harshness) performance of the vehicle.

1. Introduction

In the automotive industry, noise, vibration, and harshness is referred to as the NVH problem of automobile, which is a comprehensive problem to measure the manufacturing quality and core technology of automobile. It gives the automobile users and consumers the most superficial and direct feeling. Excessive vehicle noise will reduce the sound quality in the car and negatively affect the psychology and physiology of passengers. Therefore, reducing the noise and vibration in the car has attracted widespread attention. Vehicle noise, vibration, and harshness performance have become design standards. In terms of NVH performance, new-energy models do not have the noise masking effect of engine and other components, but the noise of road noise, wind noise, and electronic and electrical accessories is more prominent.

Noise control usually requires reducing the sound by changing the sound source, increasing the transmission path, or removing objects or subjects exposed to the noise. Therefore, the vehicle noise level can be improved from the following three aspects: noise source, transmission path, and receiver [1, 2].

Only by accurately identifying and characterizing noise and vibration sources can new design improvements and solutions be verified, thereby improving the sound comfort of the vehicle interior. The internal noise of the vehicle mainly comes from the engine and gearbox, intake and exhaust system, road noise, and high-speed wind noise, which are closely related to the structure and working state of the vehicle and have the characteristics of time-varying and randomness [3]. According to the mechanism of noise generation, noise sources can be divided into two types. Structural noise source: the noise generated by the vibration of vehicle structural components, which can excite the vibration of the vehicle compartment and cause structural noise. Air noise source: the noise generated by the mutual excitation of various subsystems and aerodynamics of the vehicle, which is transmitted through the body and is perceived by passengers [4]. Structure noise is mainly low frequency of main frequency, and air noise is mainly main frequency intermediate frequency and high frequency. Related research and analysis show that the contribution of air noise to vehicle internal noise is less than structural noise [1]. When the vehicle is running at a relatively low speed, especially on rough roads and cruising or partial throttle conditions, no obvious

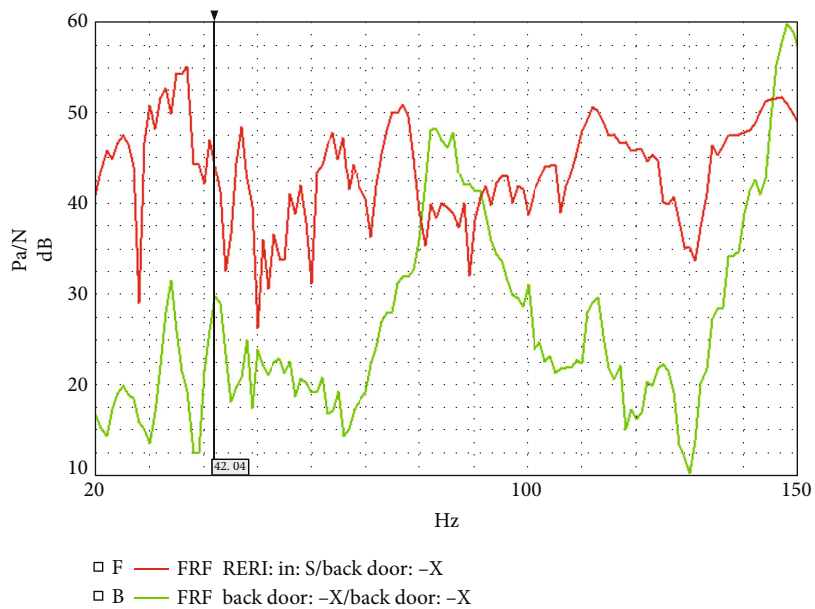

Figure 1: Backup door NTF.

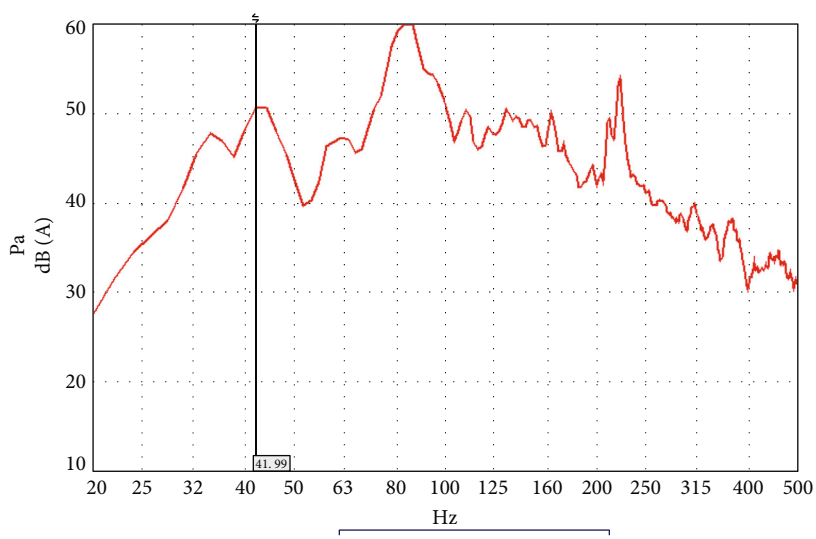

Figure 2: Noise in the vehicle.

aerodynamic noise will be produced [5]. The noise generated by the front structure, the noise and power generated by the rear structure, and the noise generated by the system air are the main noise source below 500 Hz [6, 7].

At present, the control of road noise is mainly divided into active and passive noise control technology. The principle of active noise control (ANC) is to effectively reduce the road noise problem by collecting noise samples according to the characteristics of noise sound waves and after systematic analysis and processing, and a noise sound wave with the same amplitude and opposite phase is designed to offset the noise, thus effectively reducing the road noise problem. This control technology is a potential supplementary technology for passive noise control of light vehicles [8]. The advantage of the control technology is that the sound device is arranged conveniently, and the noise suppression effect of low-frequency structure is good. Its disadvantages are poor stability, high technical requirements, and high cost.

Passive noise control technology has been widely used to control noise, vibration, and harsh sounds in the cabin [9]. Passive noise control technology is the stage of engineering sample vehicle, and the main noise reduction method is often adopted to solve the road noise problem of real vehicle, which is mainly to take measures from the response point and structure transfer path of the body structure. The control methods include the following: the muffler is used in the key parts of the vehicle to weaken the noise source, the local stiffness mode is improved by increasing damping or strengthening the SMT material, and the vibration of the structure is weakened. Or by improving the sound

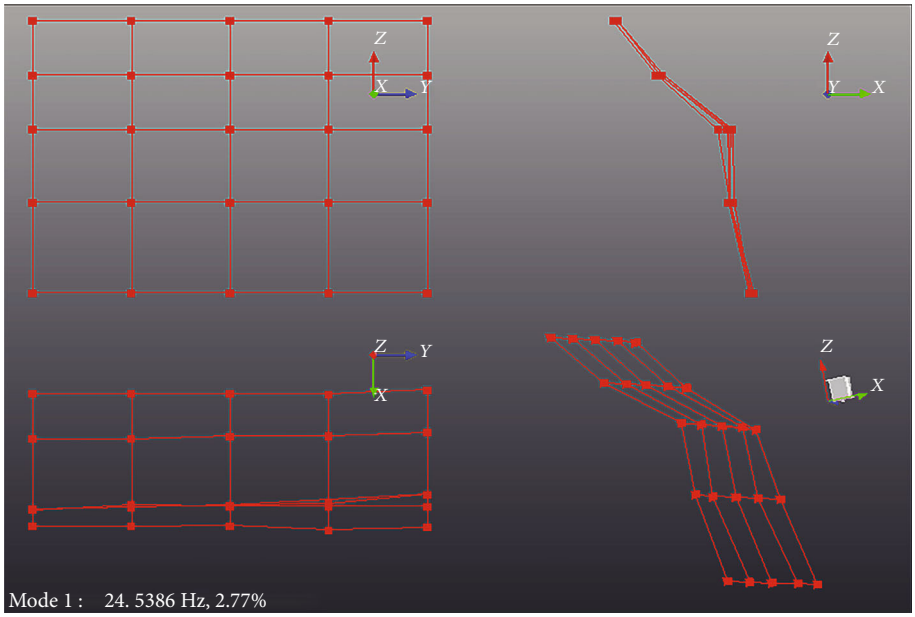

(a) Results of the experiment 24.5 Hz

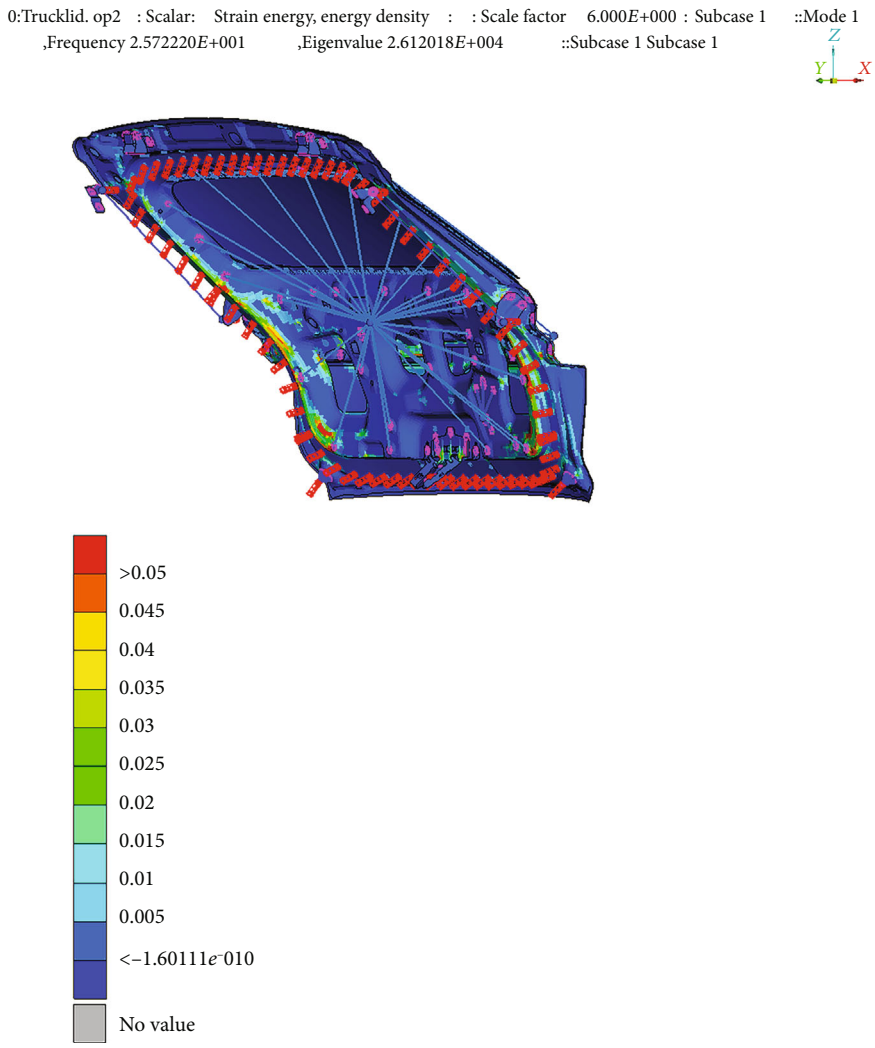

(b) Simulation results 25.7 Hz

Figure 3: The first-order bending mode of the backup door.

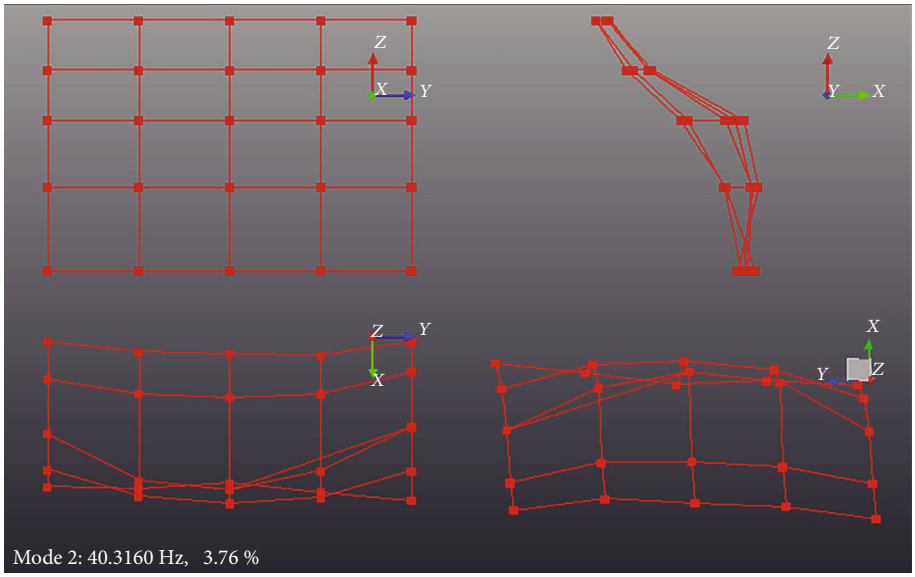

(a) Results of the experiment 40.3 Hz

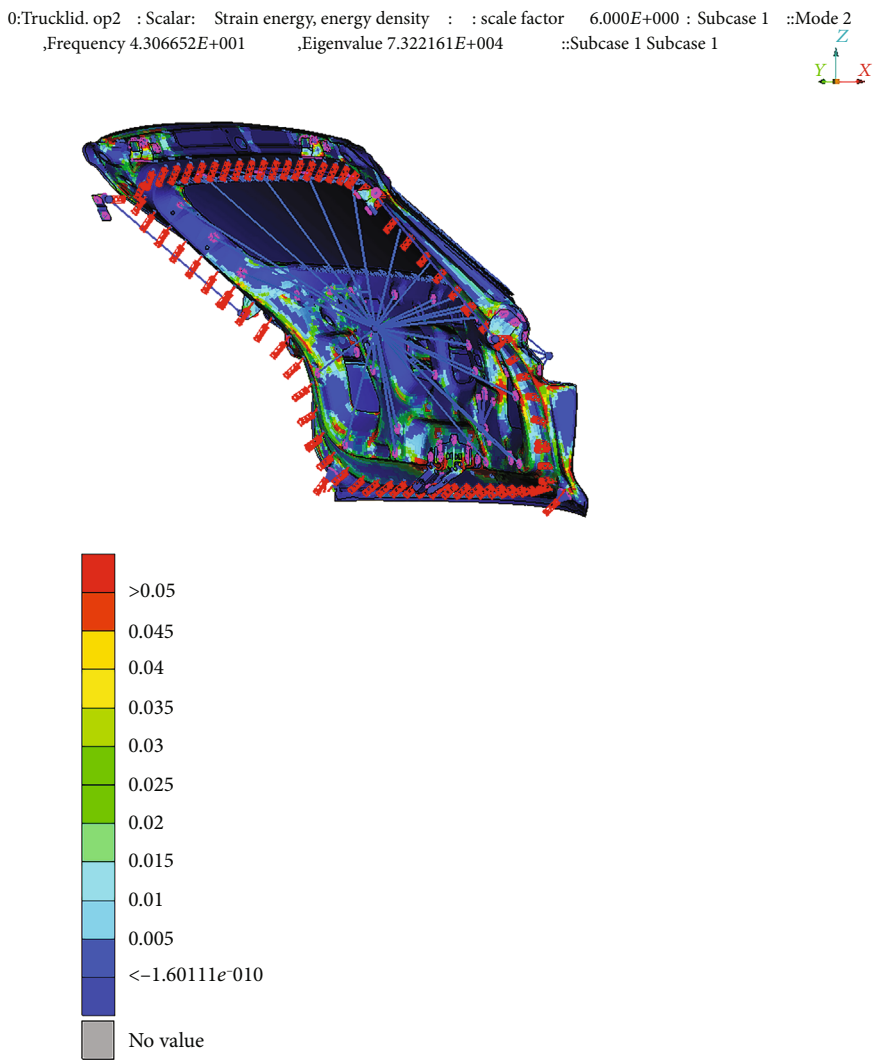

(b) Simulation results43.1 Hz

Figure 4: The first-order torsional mode of the backup door.

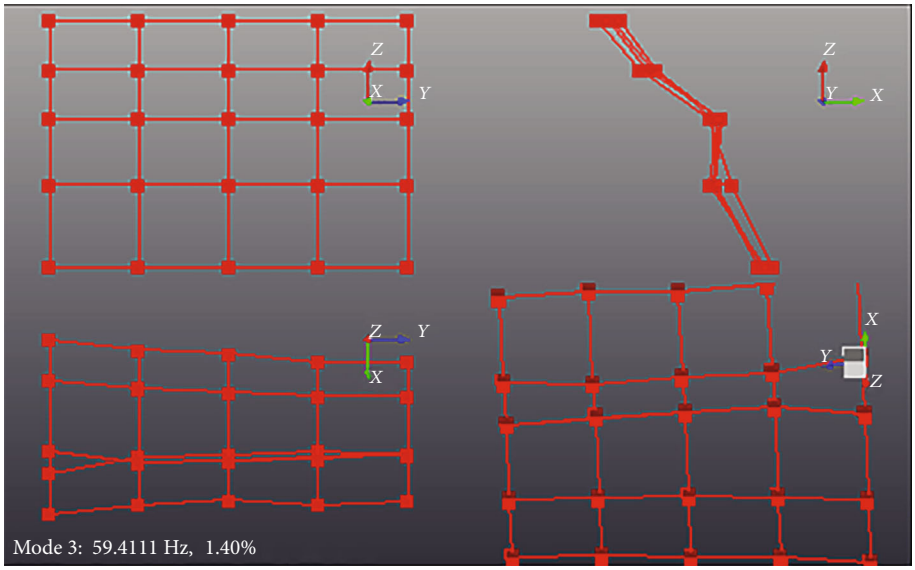

(a) Results of the experiment 59.4 Hz

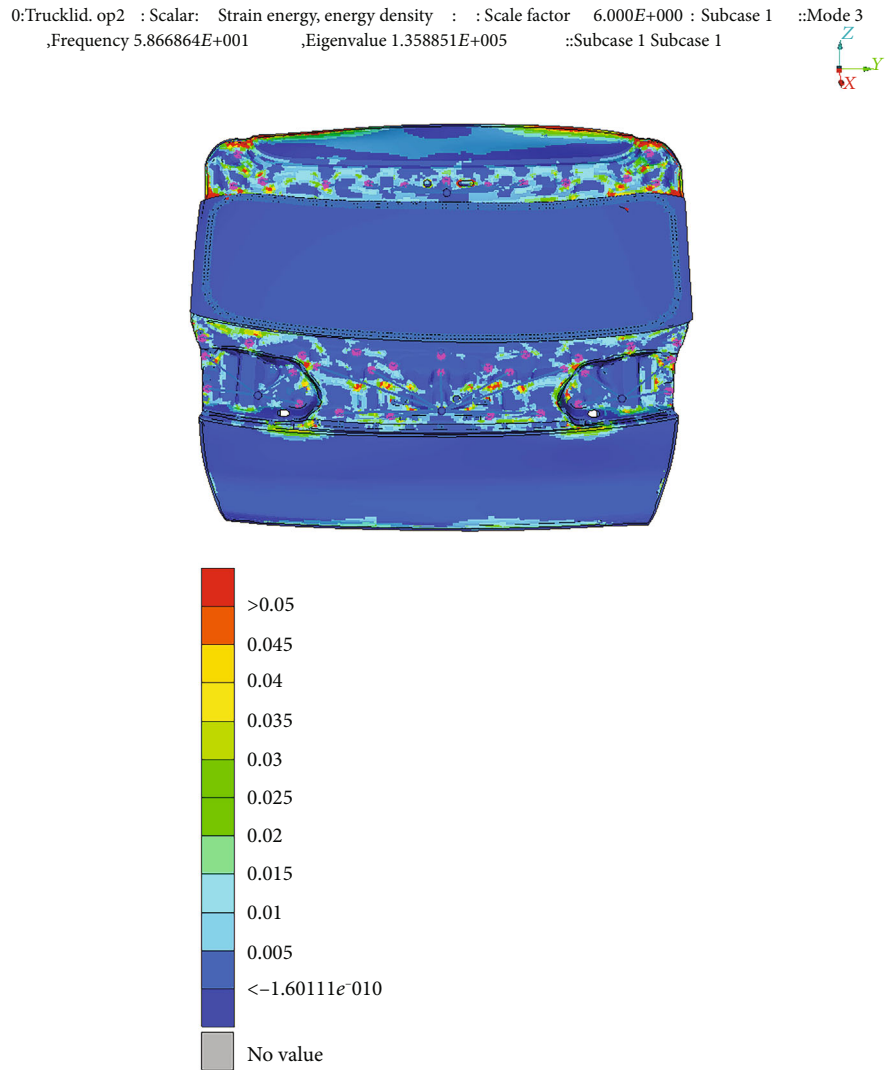

(b) Simulation results58.7 Hz

Figure 5: Second-order bending modes of the backup gate.

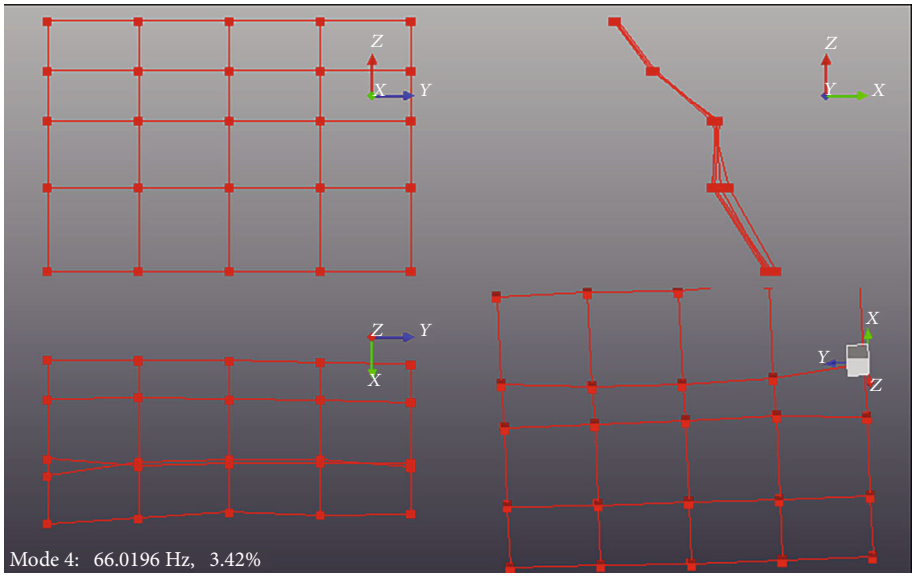

(a) Results of the experiment 66.0 Hz

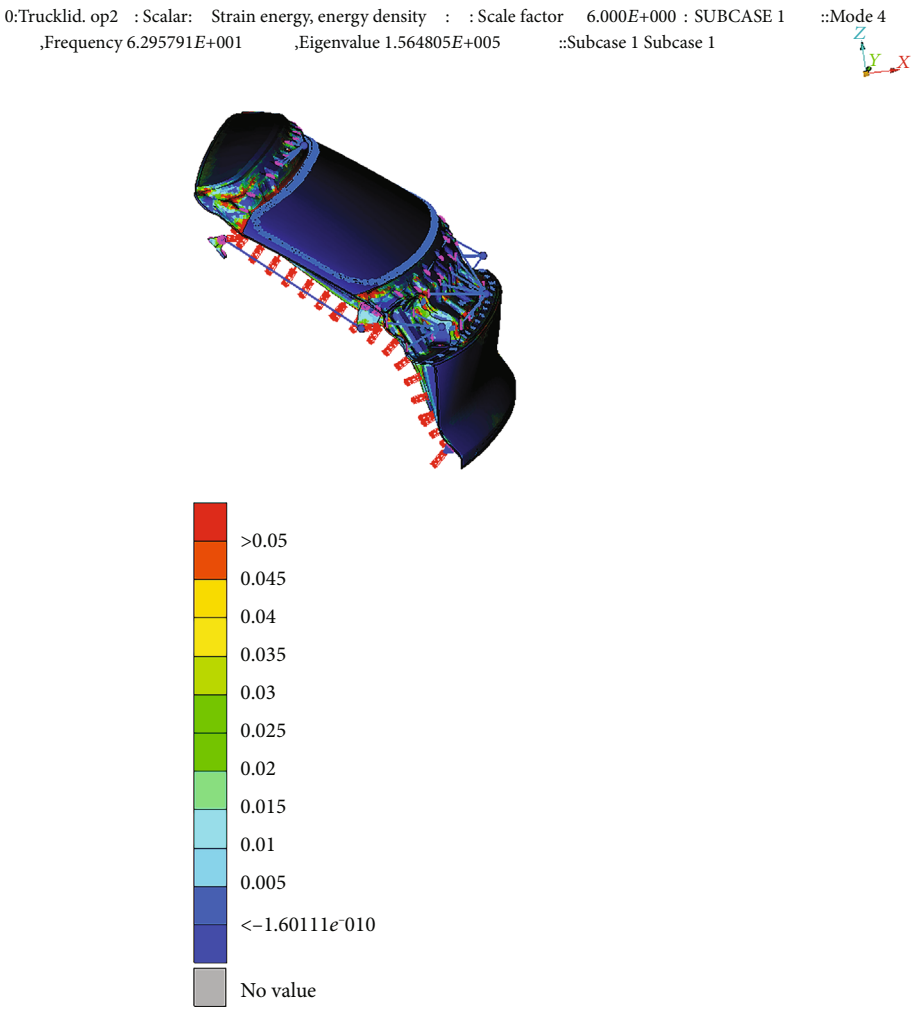

(b) Simulation results63.0 Hz

Figure 6: Second-order torsional modes of the backup gate.

absorption and insulation performance of the acoustic package to reduce the car noise set the format: font color: red set the format: red set the format: highlight set the format: highlight radiation, through the above means to reduce the vibration of the body structure. Local stiffness, modal, and acoustic transfer indicators are improved by optimizing the body structure. Based on the above analysis, the test vehicle in this paper is still in the stage of engineering sample vehicle, so passive noise control technology is adopted.

The research on the performance of road noise will go on and on. This paper takes the road noise problem of a new energy vehicle as the research object and introduces in detail the finite element modeling, benchmarking, road noise simulation analysis process, road noise simulation analysis, and benchmarking in the engineering design stage. On this basis, the validity and accuracy of the analysis results are confirmed. Aiming at the road noise problem in real cars, the real cause of the problem is found by using the transfer path analysis. After the improvement scheme is proposed, the improvement effect is verified by the real car test.

2. Problem Analysis

2.1. Problem Description. When the pure electric SUV is driving at a constant speed of 40 km/h on the rough asphalt road, the passengers in the back can feel a very obvious feeling of ear pressure. Through experimental verification, it is found that the ear pressure problem of this SUV mainly occurs in the engine idle speed and low-speed condition. The low rotation speed is mainly shown in 1500 rpm-3000 rpm, but the subjective feeling in the car was not obvious in the low-speed condition. In contrast, the subjective feeling of the ear pressure in the car was more obvious in the idle condition, which was unacceptable.

2.2. Problem Analysis. In order to reduce the noise in the car more scientifically, the first step is to identify the noise source. Generally speaking, simulation methods and experimental methods can be used to determine the noise source of the vehicle. Simulation methods usually use numerical analysis methods to predict the noise characteristics of products in the design stage of automotive products. The experimental method is usually based on the real environment, and the adjustment plan can be verified in the mass production stage of the car. In actual automobile production, the two methods are indispensable and complement each other [1]. Through experiments and simulation analysis, it is found that the cause of the low-frequency aural sense problem of the SUV is the first-order torsional mode of the backup door is coupled with the acoustic mode of the vehicle, thus causing a series of NVH problems.

After testing, the first-order longitudinal acoustic mode of the SUV is about 43 Hz, and it is along the x-direction of the vehicle (that is, the axis direction from the front to the rear of the vehicle). As a result, sheet metal and panel mounted in the x-direction can easily push the acoustic cavity modes to move. When these sheet metal and panel modes are close to the acoustic cavity modes, the acoustic cavity modes will be excited by them, causing the acoustic cavity modes to move in accordance with their original modal formation, thus generating noise.

Table 1: Comparison of the natural frequencies of the front four modes.

Formation	Finite metacalculation frequency/Hz	Modal test frequency/Hz
First-order bending	25.7	24.5
First-order twist	43.1	40.3
Second-order bending	58.7	59.4
Second-order twist	63.0	66.0

The first-order torsion mode of the SUV's backup door is about 42 Hz, which is close to the acoustic cavity mode. Therefore, the acoustic cavity mode is excited and low-frequency noise is generated, resulting in low-frequency ear pressing sensation. It leads to worse subjective feelings.

The structure of the vehicle is complicated. Some assumptions have been introduced into the numerical analysis of the dynamic characteristics of the vibration-acoustic system and have led to a significant simplification of the simulation model. However, the reliability of the simulation results is very consistent with the accuracy of the model. Experimental measurement and testing can provide better solutions [1].

The structure and installation method of the car backup door is relatively simple and is generally connected with the body through two hinges, and through the limit block and door lock, it is fixed on the car body, thereby limiting its displacement. In order to better investigate the causes of the 42 Hz peak in the car, NTF (noise transfer function) test was carried out on the backup door, after testing and analysis. The results are shown in Figures 1 and 2.

Figure 1 shows the NTF test data of the backup door. Figure 2 shows the spectrum diagram of the inner ear noise of the rear right rear passenger under 40 km/h condition. The peak value problem of 42 Hz mainly exists in ultralow frequency. Moreover, the peak value of 42 Hz makes a great contribution to the vehicle and occupies a dominant position in the ultralow frequency. Meanwhile, the vibration amplitude of 42 Hz is larger. Moreover, the peak value of vibration coincides with the peak value of interior noise. Therefore, simulation analysis and modal analysis are needed for the backup door to understand its structural characteristics and determine the cause of noise generation.

3. Simulation Analysis

3.1. Simulation Results of Backup Door. Simulation analysis methods are fast and efficient in the prediction and identification of noise sources. Common methods include statistical energy analysis method, boundary element method, and finite element method [10].

Modal analysis is a common method to study the dynamic characteristics of structures. It has been widely used in engineering field. By analyzing the modes, you can get a lot of information, such as system mass, dynamic stiffness, natural frequency, and the main formation parameters. At the

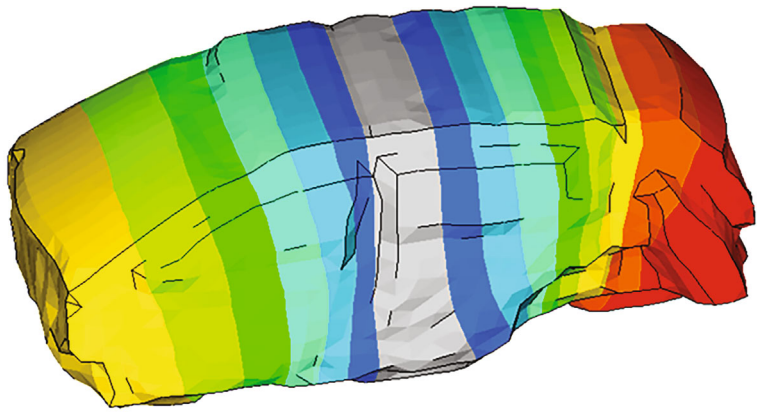

Figure 7: First-order longitudinal mode 43 Hz.

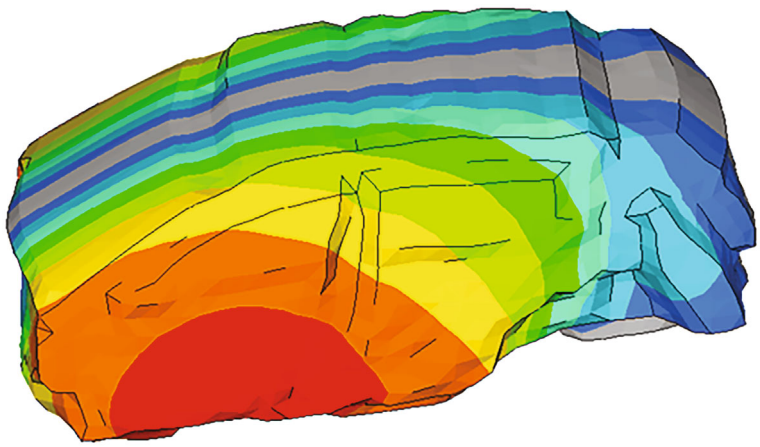

Figure 8: First-order transverse mode 90.5 Hz.

same time, modal analysis can more truly reflect the structural characteristics of the object. But the only drawback is that modal analysis is not clear about the division of measurement points. The finite element method includes all possible methods. These methods connect many simple equations on a small area called finite element and use it to estimate complex equations on a larger area. It regards the solution domain as composed of many small interconnected subdomains called finite elements, assumes an appropriate (simpler) approximate solution for each element, and then derives the solution to this domain to satisfy the conditions (such as structure the equilibrium condition), so as to get the solution of the problem [10]. The finite element simulation can reflect all the details of the object. Therefore, in this paper, comprehensive tests are combined with tests and simulations on the backup gate. Conduct modal analysis. In the actual test, in order to better reflect the movement formation of the backup door, 25 measuring points are arranged for the backup door. Test the mode state of the backup door by LMS Test.Lab/Impact testing module. Artificial excitation test is a quick and simple method to find out which resonance frequencies radiate more noise. Measure the sound pressure generated by the force input by hitting the system with a hammer at one position and measuring the sound pressure generated at the receiver position [11]. The experiment was carried out under the constraint of the whole vehicle, and the power hammer was used to stimulate the backup door. In order to make the formation more accurate, the mode test is carried out by using single excitation point and moving sensor. Figures 3–6, respectively, show the experimental and simulation results of the first-order bending mode, first-order torque mode, second-order bending mode, and second-order torque mode of the backup door. The statistics are shown in the comparison of the natural frequencies of the fourth-order mode in the backup front door in Table 1. It can be seen that the error between the simulation and the test is less than 5%, which indicates that the results obtained by the simulation method are very close to the reality. The simulation method will be used to analyze the optimized scheme below.

3.2. Simulation Results of Acoustic Cavity Mode. During vehicle development, a finite element model (FEM) was used to analyze the fully trimmed car body. The accuracy of this coupled structure-acoustic system model depends on the accuracy of the dynamic characteristics expressed on the input, output, and structural acoustic coupling surfaces. In the digital development stage, the mode shape and frequency

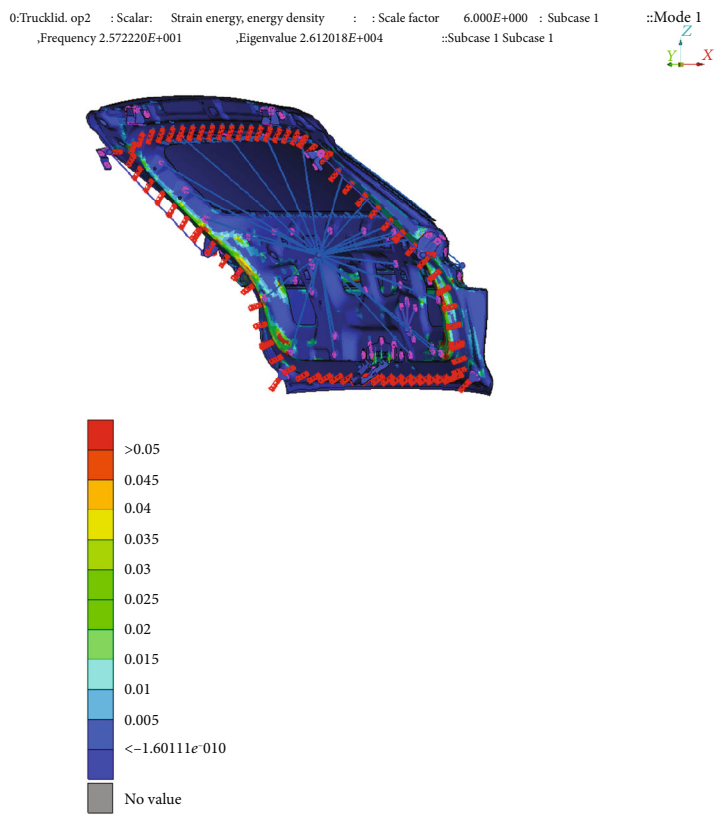

(a) Before optimization 25.7 Hz

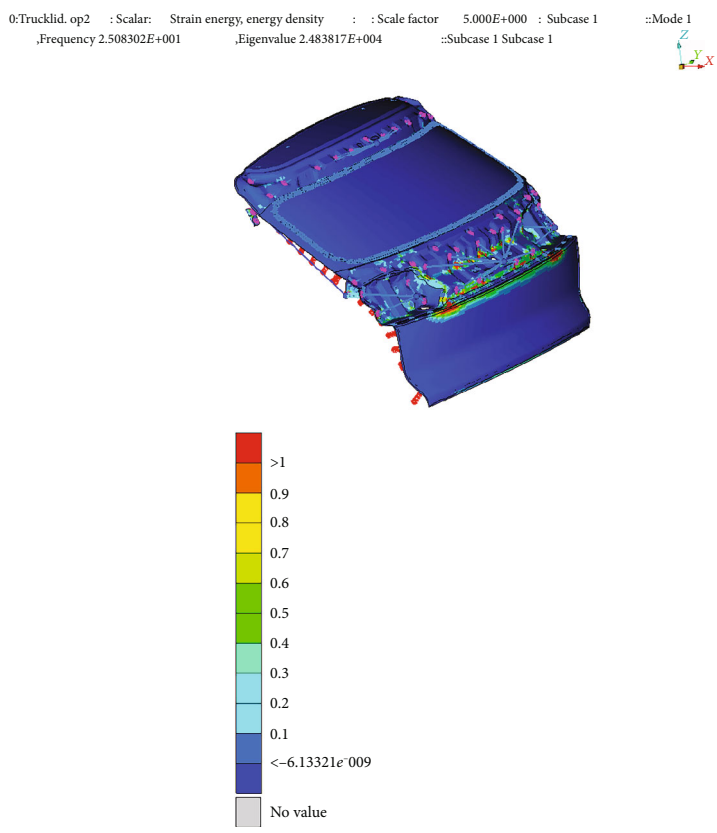

(b) After optimization 25.0 Hz

Figure 9: Comparison before and after optimization of the first-order bending mode of the backup door.

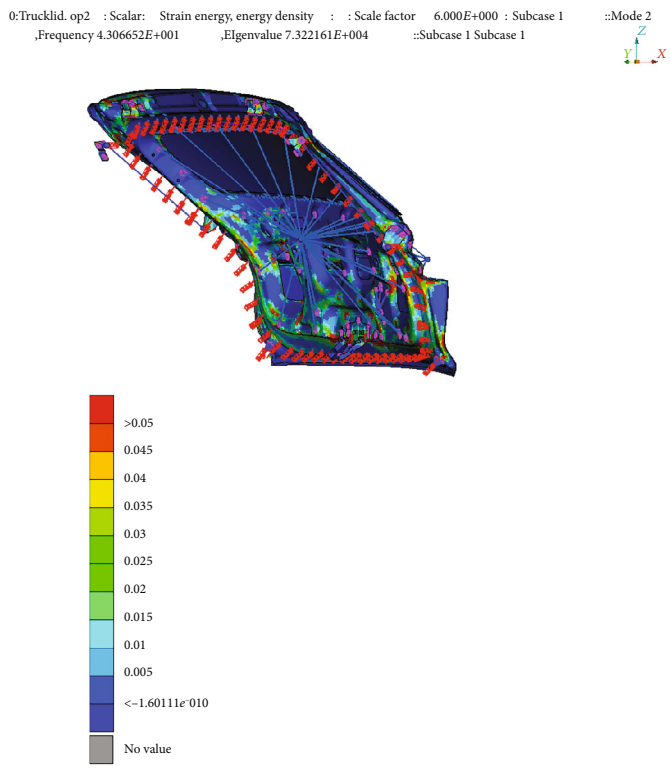

(a) Before optimization 43.1 Hz

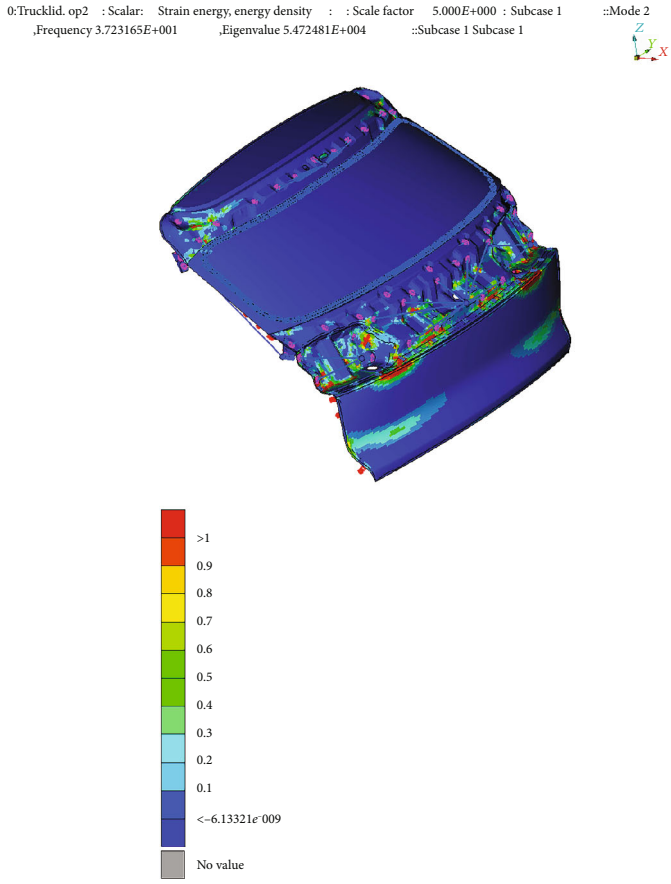

(b) After optimization 37.2 Hz

Figure 10: Comparison before and after optimization of the first-order torsional mode of the backup door.

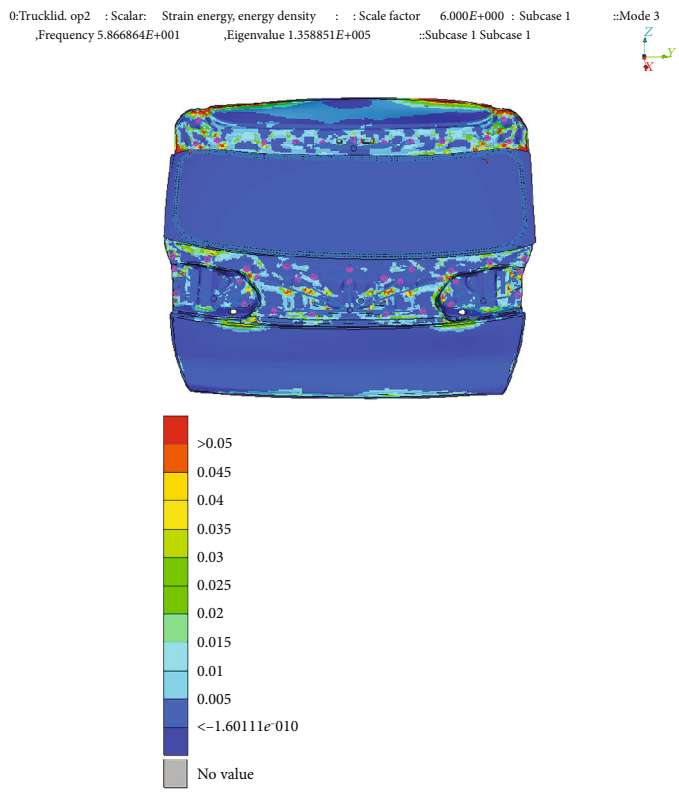

(a) Before optimization 58.7 Hz

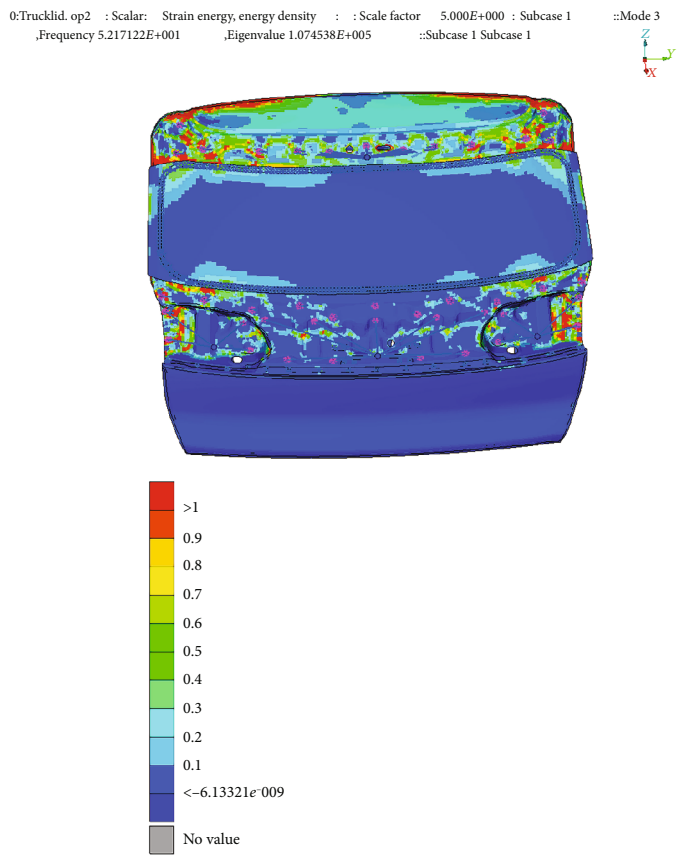

(b) After optimization 52.2 Hz

Figure 11: Comparison before and after optimization of second-order bending modes of the backup door.

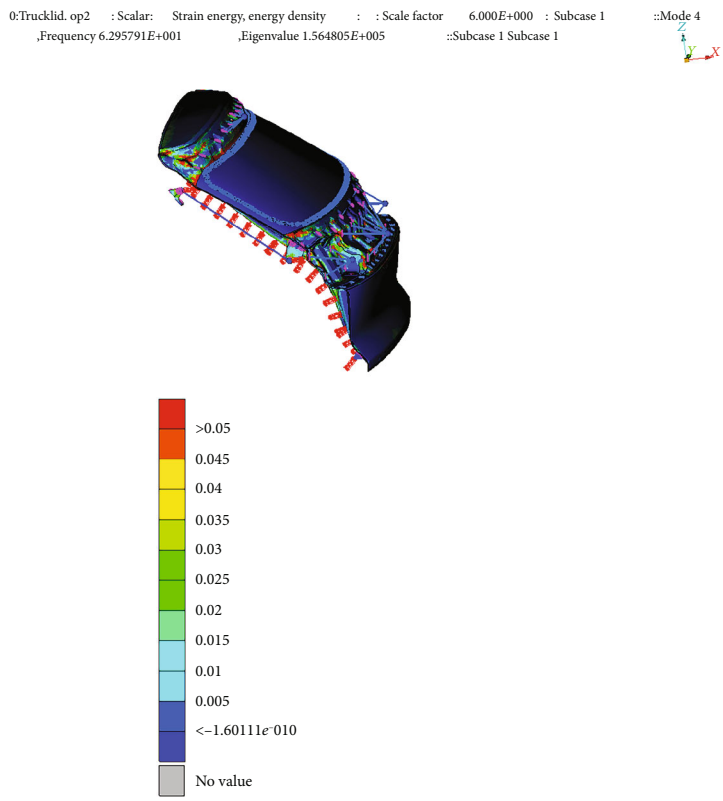

(a) Before optimization 63.0 Hz

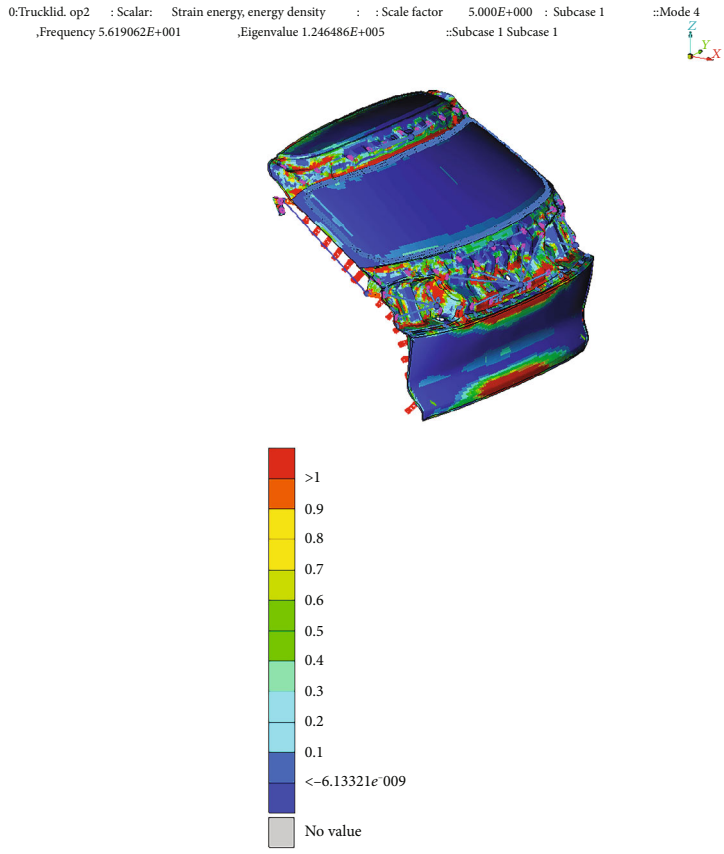

(b) After optimization 56.2 Hz

Figure 12: Before and after optimization of the torsional bending mode of the backup door.

Table 2: Frequency comparison before and after optimization of the backup door.

Formation	Frequency before optimization	Frequency after optimization	Difference
First-order bending	25.7 Hz	25.0 Hz	0.7 Hz
First-order twist	43.1 Hz	37.2 Hz	5.9 Hz
Second-order bending	58.7 Hz	52.2 Hz	6.5 Hz
Second-order twist	63.0 Hz	56.2 Hz	6.8 Hz

of the body structure and panels (i.e., panels) are designed to not cause noise and vibration problems. In order to optimize the modal shape of the plate and reduce vibration, it is very important to understand the acoustic mode shape on the coupling surface. Acoustic modal analysis is a method used to verify noise and vibration characteristics through experiments [12].

Acoustic cavity modal analysis can better grasp the frequency and formation of the vehicle's acoustic cavity modal. Therefore, in the later design process, all kinds of system excitation and acoustic cavity modes are matched to avoid a series of resonance problems caused by the vibration of body structure. Figures 7 and 8 show the first-order longitudinal and transverse acoustic cavity modes of the SUV, which are 43 Hz and 90.5 Hz, respectively.

Through the analysis of the mode data of the backup door, the simulation and cavity mode data of the backup door, the peak value of the 42 Hz channel noise response is close to the natural frequency of the first-order torsional mode of the backup door in the system. The first-order cavity mode is close to the backup door mode, but it has some test error. According to the principle of modal superposition, the structural modes of the two frequency points contribute greatly to the amplitude of the response of the whole system. The results show that the cause of ear-pressing sensation in the back row is the resonance between the mode of the backup door and the mode of the acoustic cavity.

4. Optimization Scheme

Generally speaking, the air noise frequency of vehicles is mainly high frequency, and the noise reduction method is mainly to use sound insulation materials and sound absorption materials. The frequency of structure noise is mainly low frequency, and the noise reduction method is mainly achieved by suppressing structural vibration [13–15].

At the same time, the acoustic cavity mode has been finalized in the design of the vehicle, and it is difficult to change it in the later stage. Therefore, the general solution to the problem caused by the modal resonance between the acoustic cavity mode and the body plate structure is to change the modal resonance of the body plate structure to prevent its modal coupling and thus generate resonance.

Commonly used methods to solve resonance in engineering can be roughly divided into three categories:

(1) *Increase Quality*. Adding mass reduces the overall mode.

(2) *Increase Stiffness*. By supporting the backup door, the stiffness of the whole or part can be increased; thus, the mode can be slightly increased.

(3) *Increase the Power Vibration Absorber*. The dynamic vibration absorber can absorb the energy generated by the original system and reduce the single peak value of the system, thus reducing the vibration generated by a single frequency.

4.1. Scheme Verification. Dynamic vibration absorber (DVA) is one of the vibration control methods to solve the vibration problem. DVA was first submitted by Frahm, also known as tuned vibration absorber (TVA). It consists of a single degree of freedom (SDOF) oscillation system, which can be placed on any structure or machine. This kind of DVA can most effectively offset the vibration of the main structure by adjusting the natural frequency of the main structure to make it consistent with the natural frequency of the structure. Passively tune the DVA and manually adjust the natural frequency of the DVA to match the modal frequency of the main structure. In order to obtain the required natural frequency, the stiffness is usually changed instead of the mass [16–20].

In order to solve the problem of in-car ear pressure caused by modal coupling, the natural frequency of the backup door needs to be changed, thus achieving frequency avoidance. Because this peak value is more prominent, and the amplitude is relatively large. Therefore, the damping dynamic vibration absorber with the backup door is verified. Figures 9–12 are the simulation calculation results of adding the damping dynamic vibration absorber to the backup door. The modal frequencies before and after optimization are shown in Table 2. In the optimized idle speed condition, it can be seen that the mode of the backup door is reduced by about 7 Hz, and the frequency is avoided by the mode of the excitation source sound. Meanwhile, the original modal formation is also greatly changed, which solves the problem of ear pressure in the car caused by the modal coupling.

4.2. Test Verification. In order to further verify the vibration absorption effect of the dynamic vibration absorber, the vehicle with and without the installed dynamic vibration absorber is verified by road test. It is verified that the operating condition is a rough road with a uniform speed of 40 km/h. At the same time, use LMS Test.Lab/Test. Lab-Signature module for data collection.

Figures 13 and 14, respectively, show the in-car noise spectrum of the uninstalled and installed power vibration

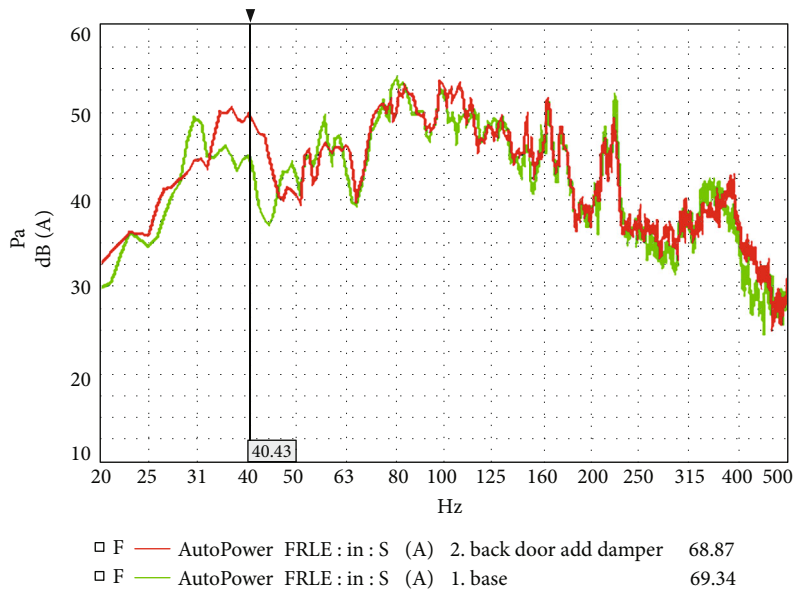

Figure 13: Comparison of front-row noise before and after modification.

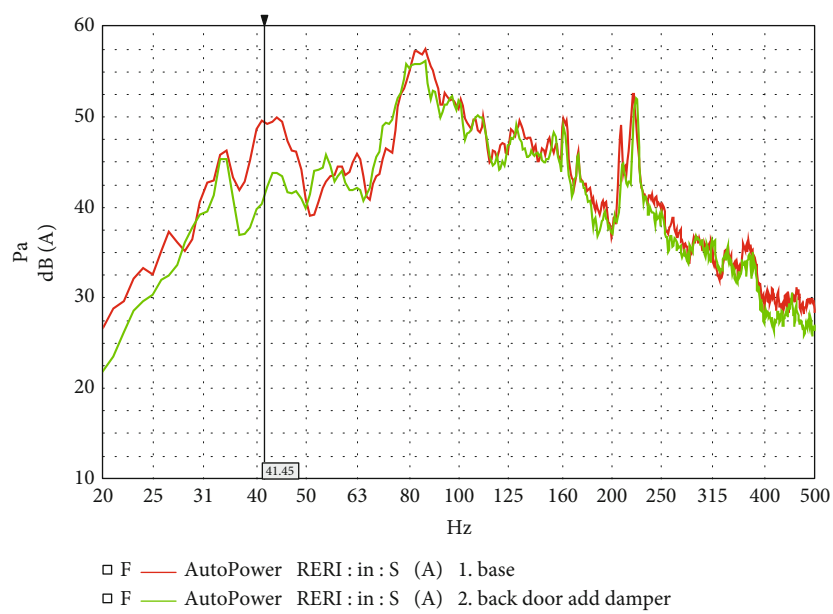

Figure 14: Comparison of back-row noise before and after changes.

absorber. From the comparison of the red and green decibel lines in the figure, it can be seen that the dynamic shock absorber has a significant effect. The peak value of 42 Hz in the driver's inner ear was reduced by about 5 dB, and the peak value of 42 Hz in the rear passenger's inner ear was reduced by 8 dB. At the same time, after installing the power vibration absorber, the in-car ear pressure sensation is improved significantly, which is acceptable and has practical application value.

5. Conclusion

A series of NVH problems caused by modal coupling are very common in engineering. The general solution in engineering is to change its natural frequency by changing its original mass, damping, and local or global dynamic stiffness. For the backup door such as large sheet metal parts, the natural frequency is lower and the mode is lower. Therefore, it is easier to cause modal coupling and thus emit low-frequency noise.

This paper is aimed at the engineering problem that when a pure electric SUV is driving at a constant speed of 40 km/h on a rough asphalt road, the rear passengers in the car can clearly feel the ear pressure. In this paper, the finite element method is first used to model the backup door, and the experimental calibration is carried out at the same time to establish the accuracy of the simulation method to obtain the modal natural frequency data. Reserve on this basis, the

selection of door type of dynamic vibration absorber which is used to increase damping scheme, the method of using the simulation contrast optimization before and after optimization scheme, see backup door modal reduced about 7 Hz, and incentive source acoustic mode state from the set format: font colors: red frequency, and at the same time, the original modal formation have significant changes, which were solved due to the modal coupling pressure inside the ear problems, finally carries on the real vehicle tests to verify the improvement effect, but also to verify the effectiveness of the method in vehicle engineering design phase.

Through this method, significant results have been achieved, and the same working conditions: rough road, 40 km/h, at a constant speed, vehicle drivers' ear 42 Hz peak decreases about 5 dB, rear passengers' inner ear noise reduces 8 dB, and 42 Hz peak has practical application value. At the same time, this solution also has a certain reference for the low-speed road noise problem of electric vehicles.

Data Availability

No data were used to support this study.

Conflicts of Interest

The author declares that he has no conflicts of interest.

Acknowledgments

The author extends his appreciation to the School-enterprise collaborative innovation projects at Tianjin Vocational Institute for funding this work.

References

[1] H. B. Huang, X. R. Huang, M. L. Yang, T. C. Lim, and W. P. Ding, "Identification of vehicle interior noise sources based on wavelet transform and partial coherence analysis," *Mechanical Systems and Signal Processing*, vol. 109, pp. 247–267, 2018.

[2] D. A. Bies, C. H. Hansen, and C. Q. Howard, *Engineering Noise Control: Theory and Practice*, CRC Press, London, 2009.

[3] S. Zhang, Y. S. Wang, H. Guo, C. Yang, X. L. Wang, and N. N. Liu, "A normalized frequency-domain block filtered-x LMS algorithm for active vehicle interior noise control," *Mechanical Systems and Signal Processing*, vol. 120, pp. 150–165, 2019.

[4] M. H. Fouladi, M. J. M. Nor, and A. K. Ariffin, "Spectral analysis methods for vehicle interior vibro-acoustics identification," *Mechanical Systems & Signal Processing*, vol. 23, no. 2, pp. 489–500, 2009.

[5] M. S. Qatu, "Recent research on vehicle noise and vibration," *International Journal of Vehicle Noise and Vibration*, vol. 8, no. 4, pp. 289–301, 2012.

[6] W. Jung, S. J. Elliott, and J. Cheer, "Local active control of road noise inside a vehicle," *Mechanical Systems and Signal Processing*, vol. 121, pp. 144–157, 2018.

[7] N. Lalor and H. H. Priebsch, "The prediction of low- and mid-frequency internal road vehicle noise: a literature survey," *Proceedings of the Institution of Mechanical Engineers Part D Journal of Automobile Engineering*, vol. 221, no. 3, pp. 245–269, 2007.

[8] M. A. Panza, "A review of experimental techniques for NVH analysis on a commercial vehicle," *Energy Procedia*, vol. 82, pp. 1017–1023, 2015.

[9] J. Cheer and S. J. Elliott, "Multichannel control systems for the attenuation of interior road noise in vehicles," *Mechanical Systems & Signal Processing*, vol. 60-61, pp. 753–769, 2015.

[10] X. Sheng, C. J. C. Jones, and D. J. Thompson, "Prediction of ground vibration from trains using the wavenumber finite and boundary element methods," *Journal of Sound & Vibration*, vol. 293, no. 3-5, pp. 575–586, 2006.

[11] G. Cerrato and P. Goodes, "Practical approaches to solving noise and vibration problems," *Sound & vibration*, vol. 45, no. 4, pp. 18–23, 2011.

[12] H. Tsuji, T. Enomoto, S. Maruyama, and T. Yoshimura, "A study of experimental acoustic modal analysis of automotive interior acoustic field coupled with the body structure," in Sae World Congress & Exhibition, Detroit, USA, 2012.

[13] P. P. Narang, "Material parameter selection in polyester fibre insulation for sound transmission and absorption," *Applied Acoustics*, vol. 45, no. 4, pp. 335–358, 1995.

[14] W. Ding and H. Chen, "Research on the interior noise contributed from a local panel's vibration of an elastic thin-walled cavity," *Applied Acoustics*, vol. 63, no. 1, pp. 95–102, 2002.

[15] A. R. Mohanty, B. D. S. Pierre, and P. Suruli-Narayanasami, "Structure-borne noise reduction in a truck cab interior using numerical techniques," *Applied Acoustics*, vol. 59, no. 1, pp. 1–17, 2000.

[16] T. Pais and D. Boote, "Developments of Tuned Mass Damper for yacht structures," *Ocean Engineering*, vol. 141, pp. 249–264, 2017.

[17] W. Gafsi, R. Chaari, N. Masmoudi, M. T. Khabou, F. Chaari, and M. Haddar, "Modeling of a passive absorber in milling tool machine," *Applied Acoustics*, vol. 128, pp. 94–110, 2017.

[18] H. B. Huang, R. X. Li, M. L. Yang, T. C. Lim, and W. P. Ding, "Evaluation of vehicle interior sound quality using a continuous restricted Boltzmann machine-based DBN," *Mechanical Systems and Signal Processing*, vol. 88, Part A, pp. 245–267, 2017.

[19] R. I. Wright and M. R. F. Kidner, "Vibration absorbers: a review of applications in interior noise control of propeller aircraft," *Journal of Vibration and Control*, vol. 10, no. 8, pp. 1221–1237, 2004.

[20] M. J. Brennan, "Some recent developments in adaptive tuned vibration absorbers/neutralisers," *Shock & Vibration*, vol. 13, pp. 531–543, 2006.